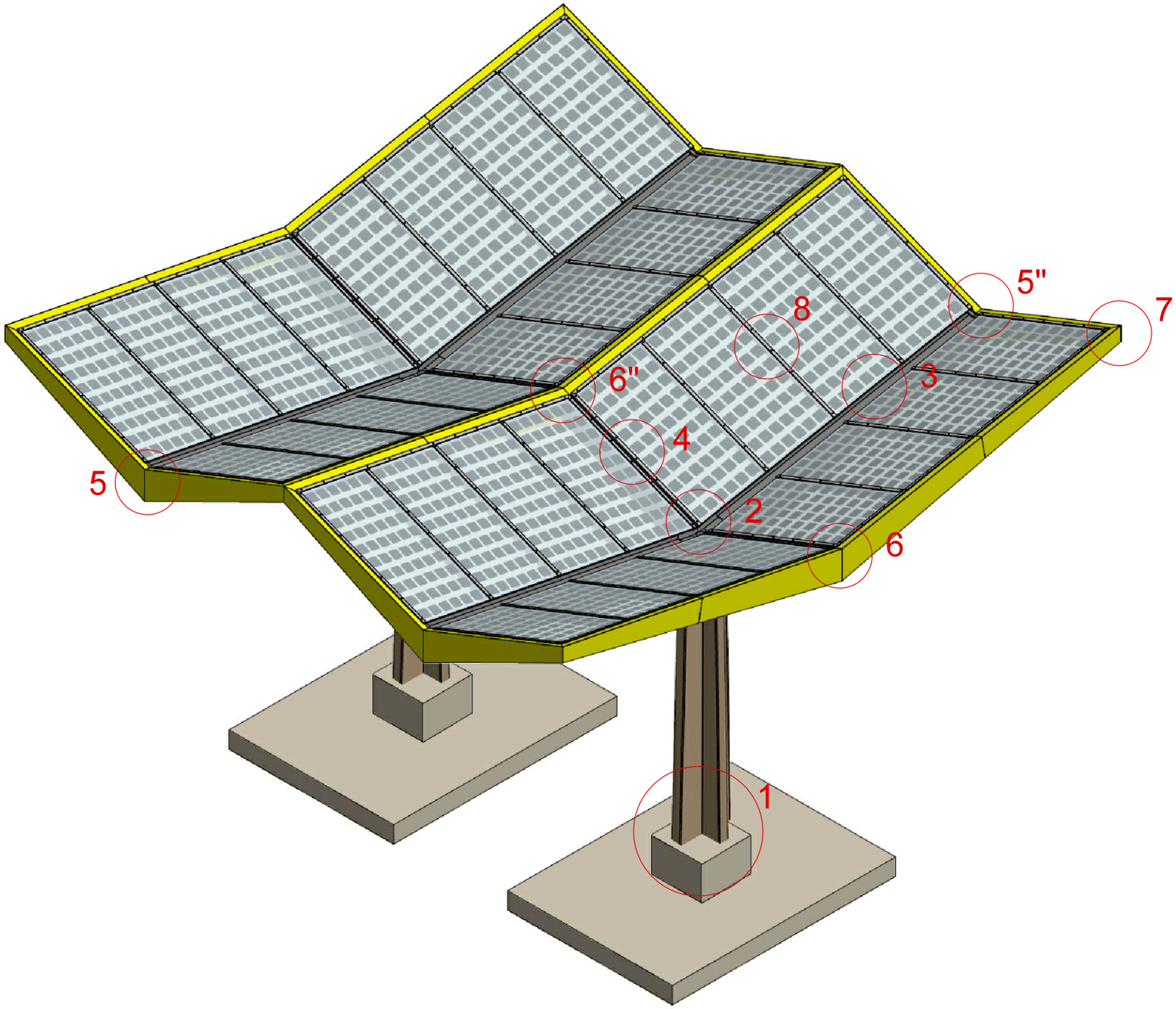

Locatie:	-
Naam:	Axonometrie
Tekening:	Double station
Nummer:	-
Datum:	17/07/2017
Formaat:	A3
Schaal:	-

FASTNED
James Wattstraat 77-79 | 1097 DL Amsterdam | T: 020-7155316 | E: contact@fastned.nl

Deze tekening is in het bezit van Fastned BV. Zij mag niet zonder onze voorafgaande uitdrukkelijke toestemming worden gebruikt, vermenigvuldigd, of aan derden worden verstrekt.

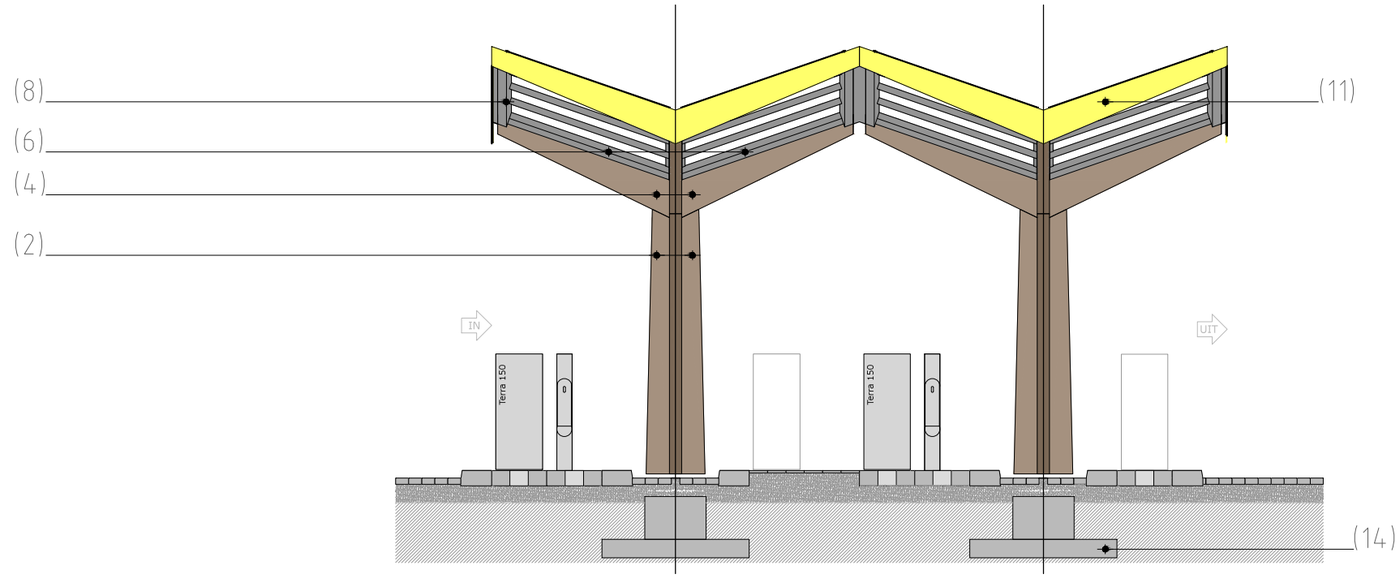

(1) Kolom, vuren, transparant coating, 960-760 x 200mm, 4.3 m.
(2) Kolom, vuren, transparant coating,380-280 x 200mm, 4.3 m.
(3) Hout ligger, vuren, transparant coating, 320-730-320, 10 m.
(4) Hout ligger, vuren, transparant coating, 320-730, 3m.
(5) Staalplaat, verzinkt, RAL 9004 - signal black, 200 x 5 mm, 4,71 m.
(6) Staalplaat, verzinkt, RAL 9004 - signal black, 200 x 5 mm, 2,75 m.
(7) Koker, verzinkt, RAL 9004 - signal black, 100x60x3.2, 2.75m.
(8) Koker, verzinkt, RAL 9004 - signal black, 250x150x6.3, 4.83m.
(9) Koker, verzinkt, RAL 9004 - signal black, 250x150x6.3, 2.78m.
(10) Glasbevestiging, Stabalux profiel, 60x20mm.
(11) Zetwerk, RVS, RAL 9004 - signal black, t=1.5 mm
(12) Zetwerk, RVS, RAL 1018 - zinc yellow, t=1.5 mm
(13) Zonnepanelen, glas/glas, 6/6mm.
(14) Funderingsblock, 3500x2500x300 + 1000x1000x700mm.

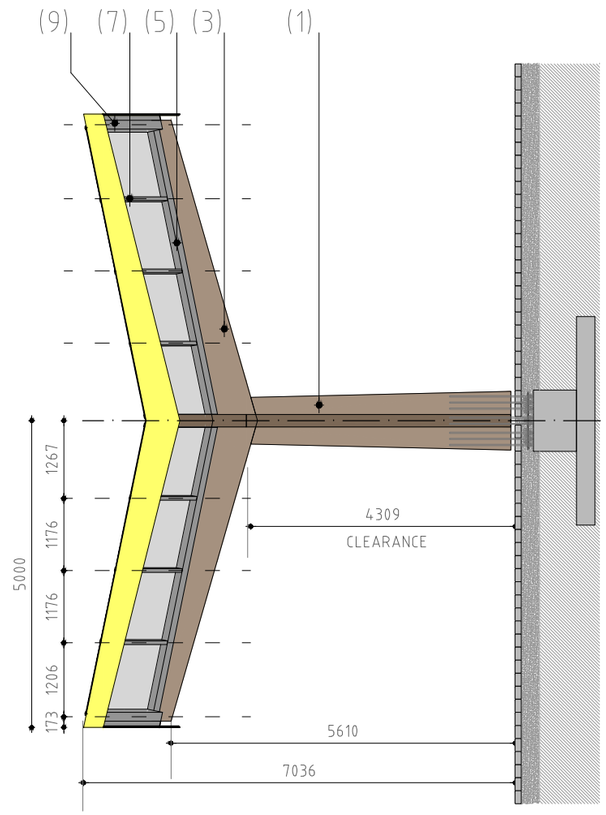

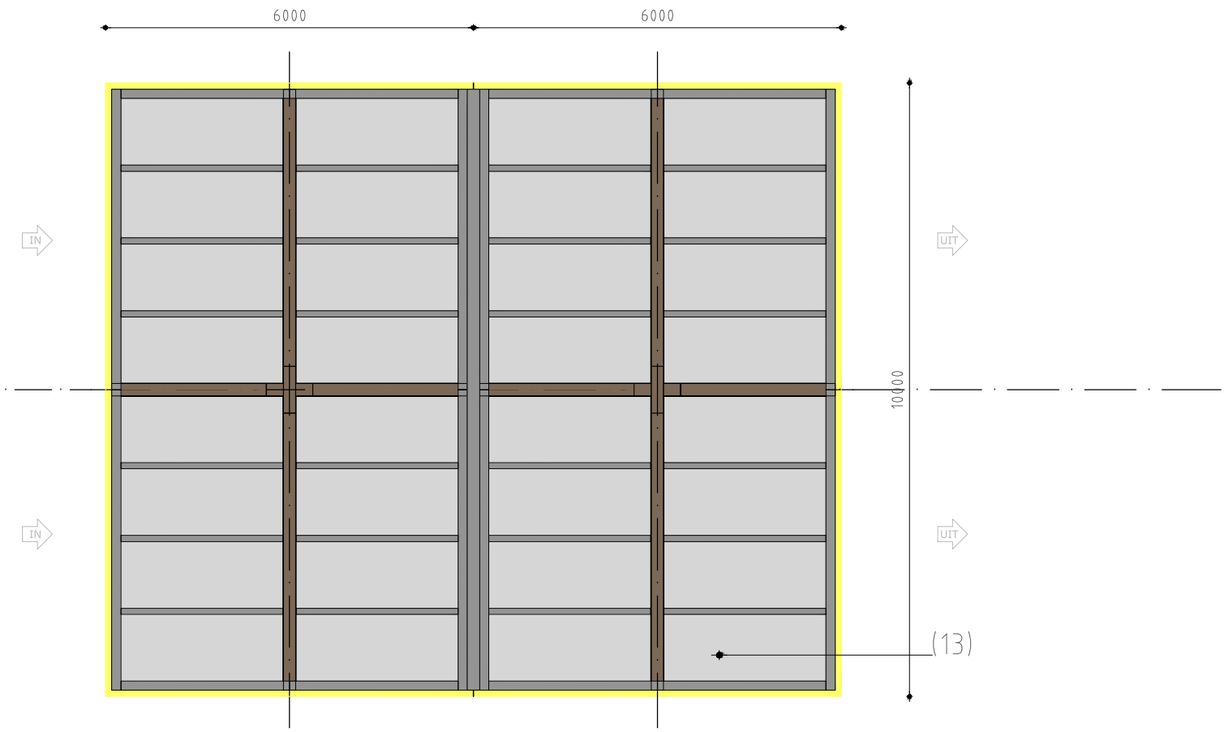

Locatie:	-
Naam:	Aanzichten
Tekening:	Double station
Nummer:	-
Datum:	17/07/2017
Formaat:	A3
Schaal:	1:100

FASTNED
James Wattstraat 77-79 | 1097 DL Amsterdam | T: 020-7155316 | E: contact@fastned.nl

Deze tekening is in het bezit van Fastned BV. Zij mag niet zonder onze voorafgaande uitdrukkelijke toestemming worden gebruikt, vermenigvuldigd, of aan derden worden verstrekt.

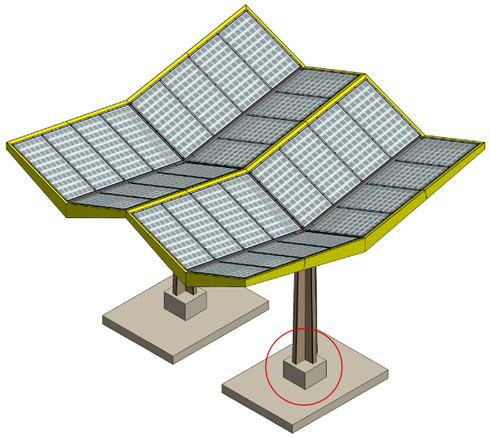

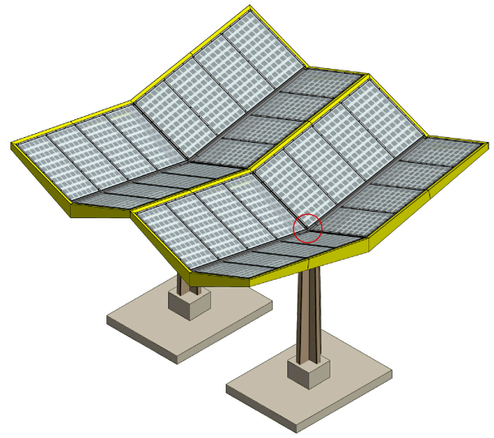

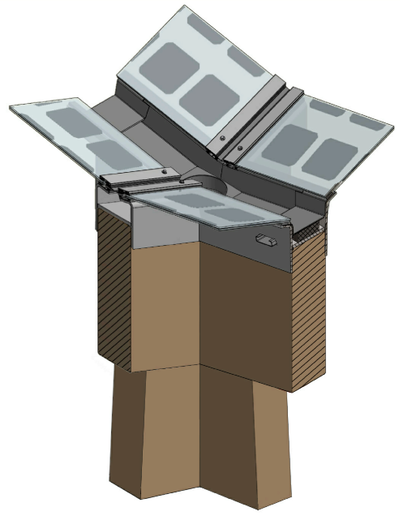

DETAIL 1

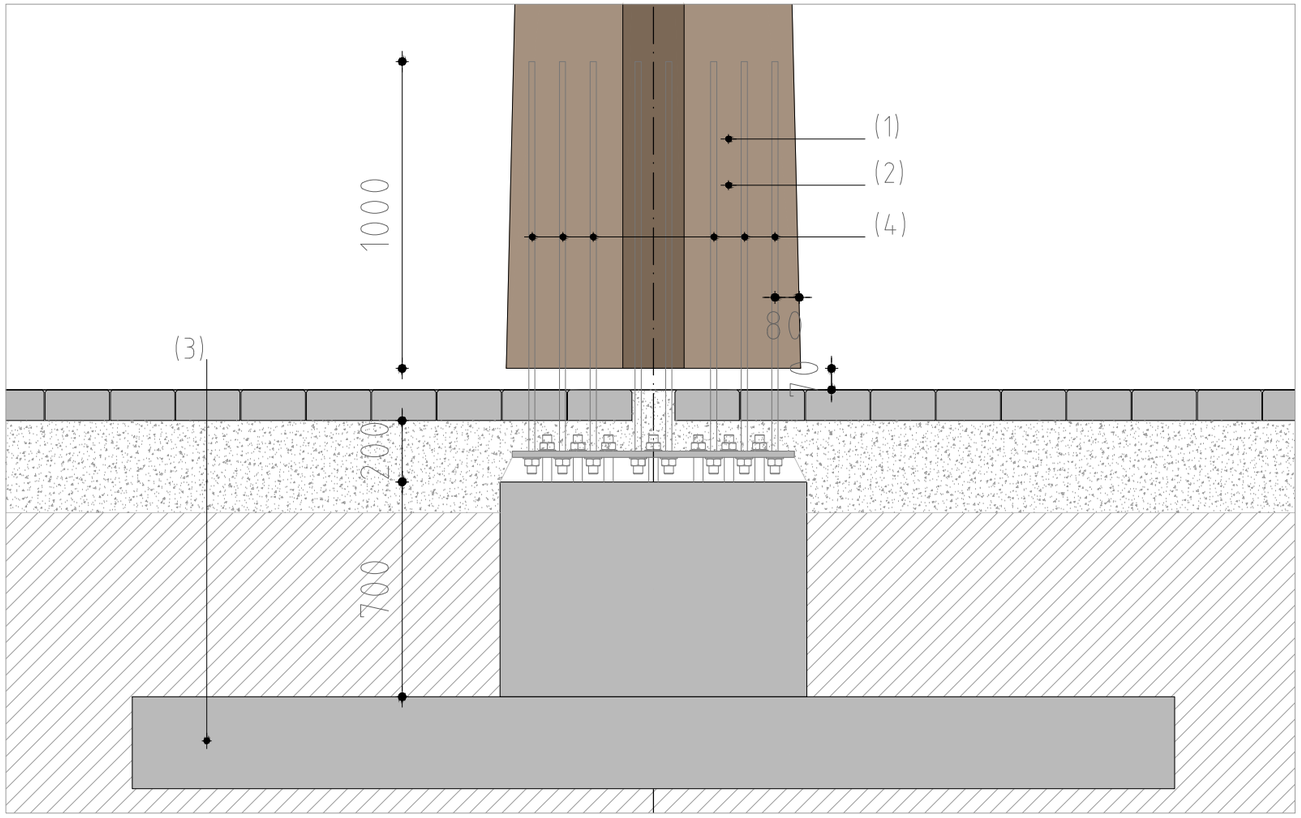

DETAIL 2

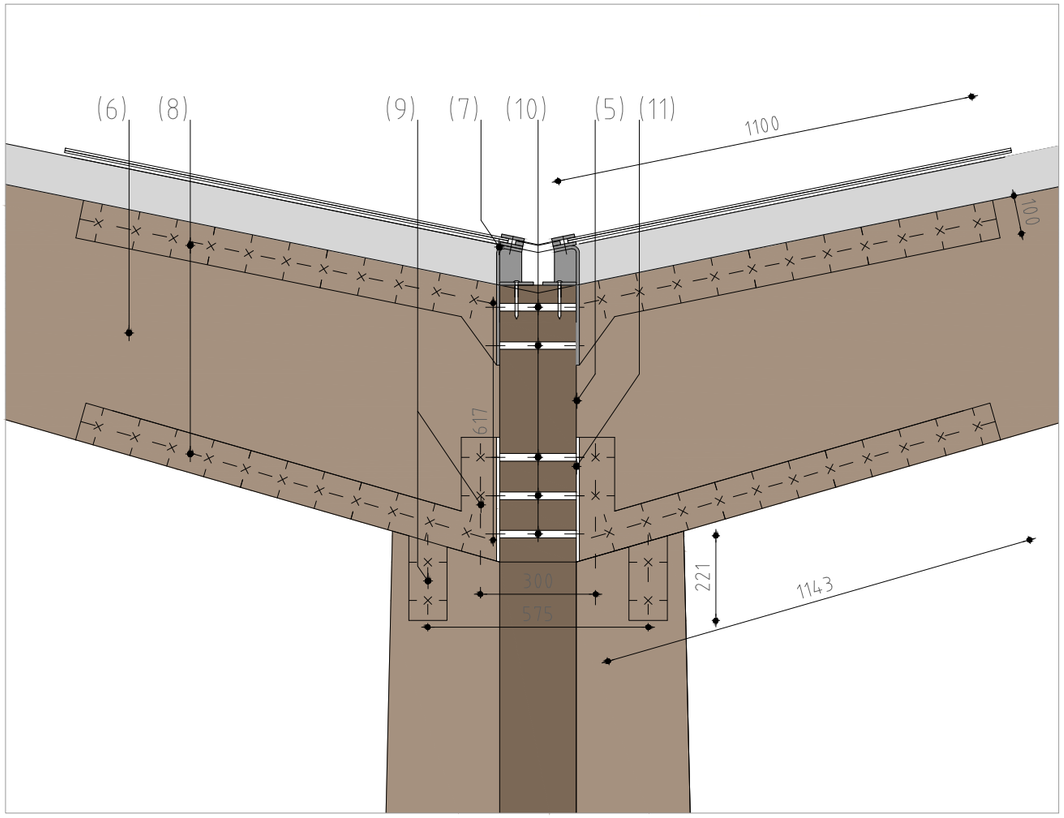

(1) Kolom, vuren, transparant coating, 960-760 x 200mm, 4.3 m.
(2) Kolom, vuren, transparant coating,380-280 x 200mm, 4.3 m.
(3) Funderingsblock, 3500x2500x300 + 1000x1000x700mm.
(4) 12x M20, 1m inlijmen.
(5) Hout ligger, vuren, transparant coating, 320-730-320, 10 m.
(6) Hout ligger, vuren, transparant coating, 320-730, 3m.
(7) Staalplaat, verzinkt, RAL 9004 - signal black, 200 x 5 mm, 2,75 m.
(8) 10x M16, h.o.h. 100mm.
(9) 2x M16, h.o.h. 100mm.
(10) 6x M20 (8.8)
(11) staal t= 25 (s375)

Locatie:	-
Naam:	Detail 1, Detail 2
Tekening:	Double station
Nummer:	-
Datum:	17/07/2017
Formaat:	A3
Schaal:	1:10, 1:16

FASTNED
James Wattstraat 77-79 | 1097 DL Amsterdam | T: 020-7155316 | E: contact@fastned.nl

Deze tekening is in het bezit van Fastned BV. Zij mag niet zonder onze voorafgaande uitdrukkelijke toestemming worden gebruikt, vermenigvuldigd, of aan derden worden verstrekt.

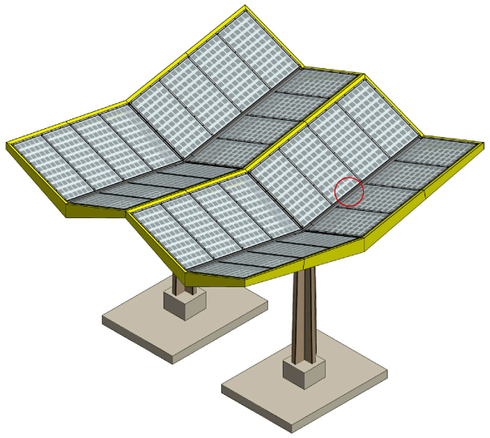

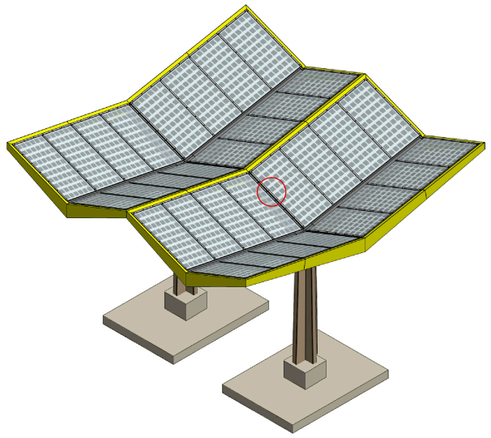

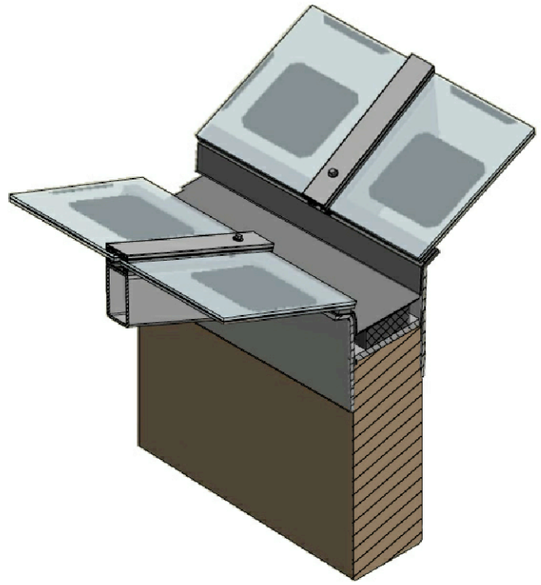

DETAIL 3

DETAIL 4

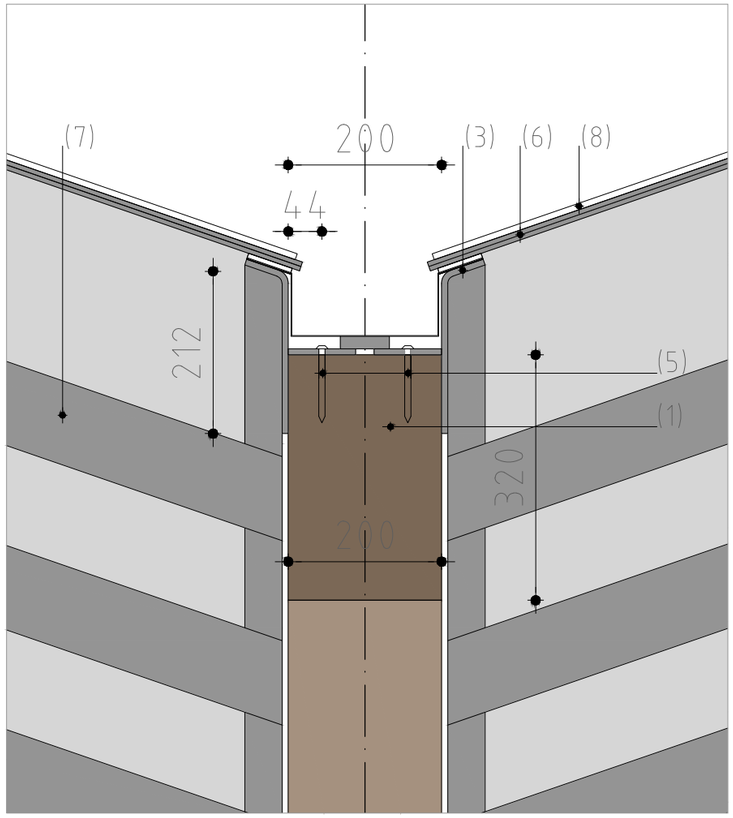

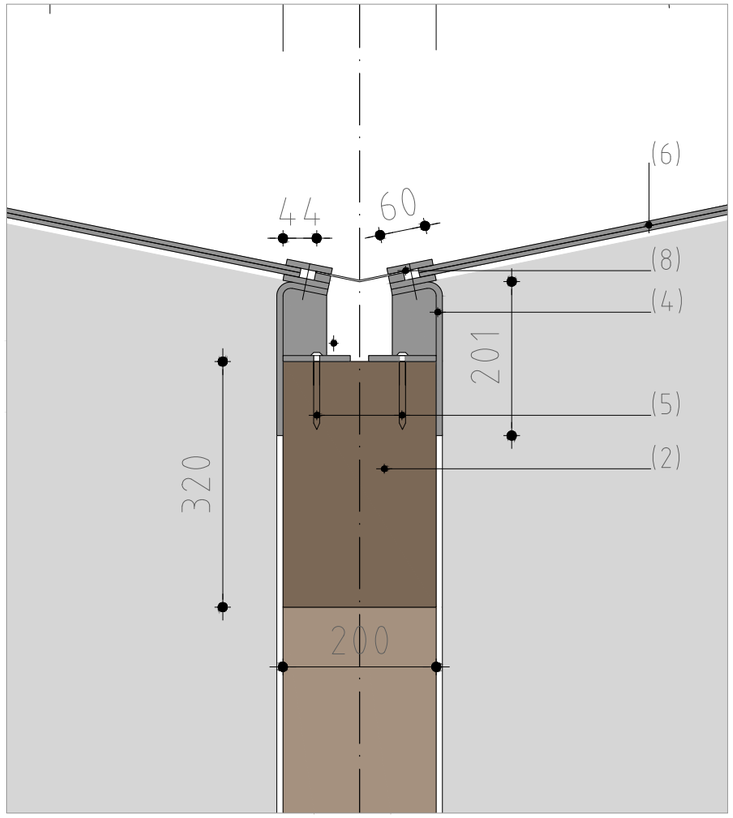

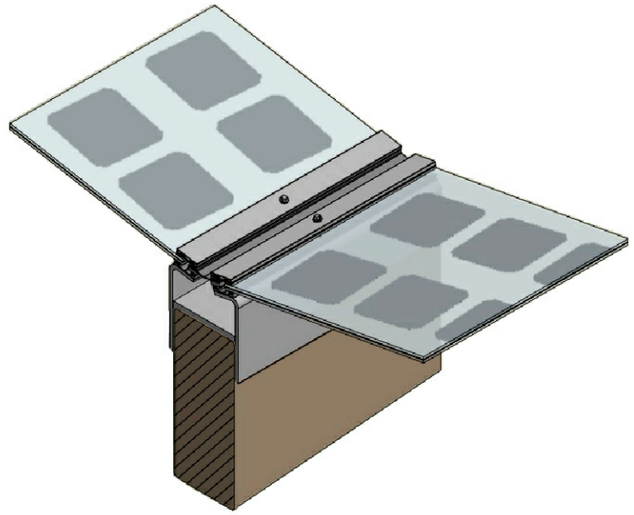

DETAIL 3

DETAIL 4

(1) Hout ligger, vuren, transparant coating, 320-730-320, 10 m.
(2) Hout ligger, vuren, transparant coating, 320-730, 3m.
(3) Staalplaat, verzinkt, RAL 9004 - signal black, 200 x 5 mm, 4,71 m.
(4) Staalplaat, verzinkt, RAL 9004 - signal black, 200 x 5 mm, 2,75 m.
(5) Schroef 8x80 mm, h.o.h. 50mm.
(6) Zonnepanelen, glas/glas, 6/6mm.
(7) Koker, verzinkt, RAL 9004 - signal black, 100x60x3.2, 2.75m.
(8) Glasbevestiging, Stabalux profiel, 60x20mm.

Locatie:	-
Naam:	Detail 3, Detail 4
Tekening:	Double station
Nummer:	-
Datum:	17/07/2017
Formaat:	A3
Schaal:	1:8

FASTNED
James Wattstraat 77-79 | 1097 DL Amsterdam | T: 020-7155316 | E: contact@fastned.nl

Deze tekening is in het bezit van Fastned BV. Zij mag niet zonder onze voorafgaande uitdrukkelijke toestemming worden gebruikt, vermenigvuldigd, of aan derden worden verstrekt.

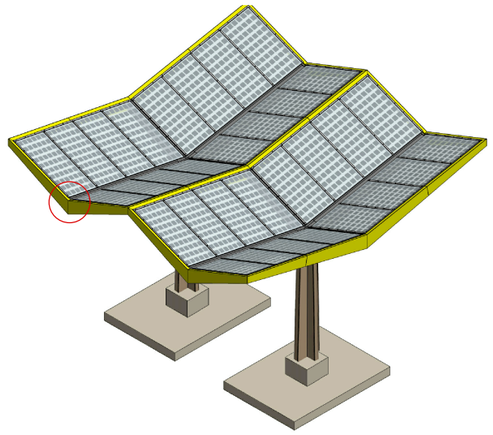

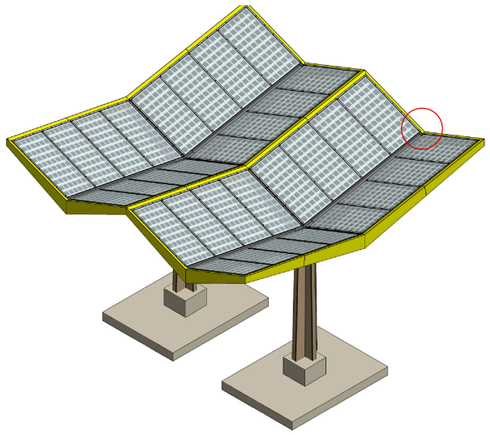

DETAIL 5

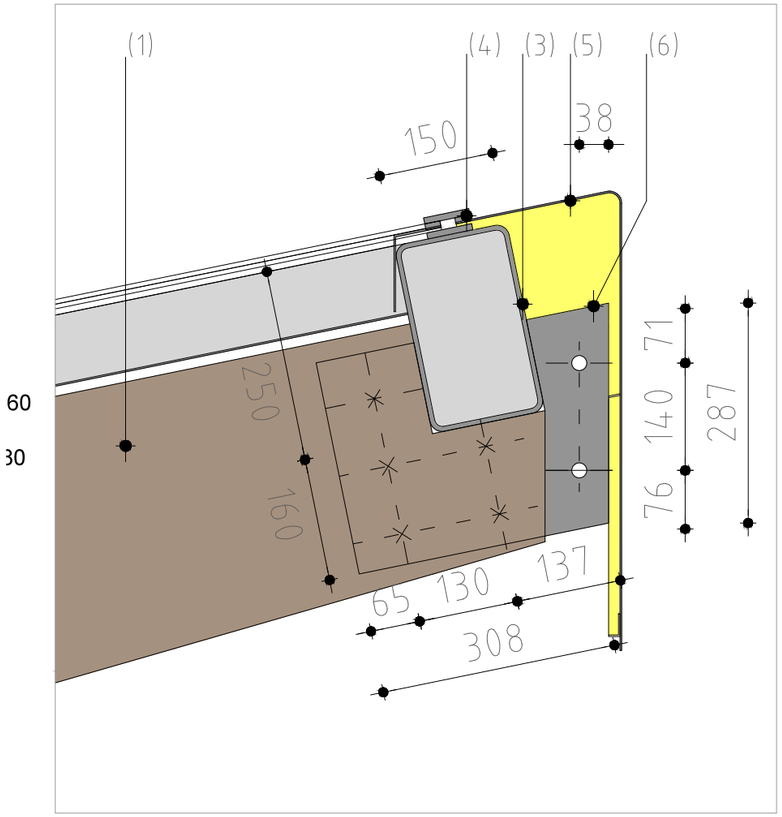

DETAIL 5"

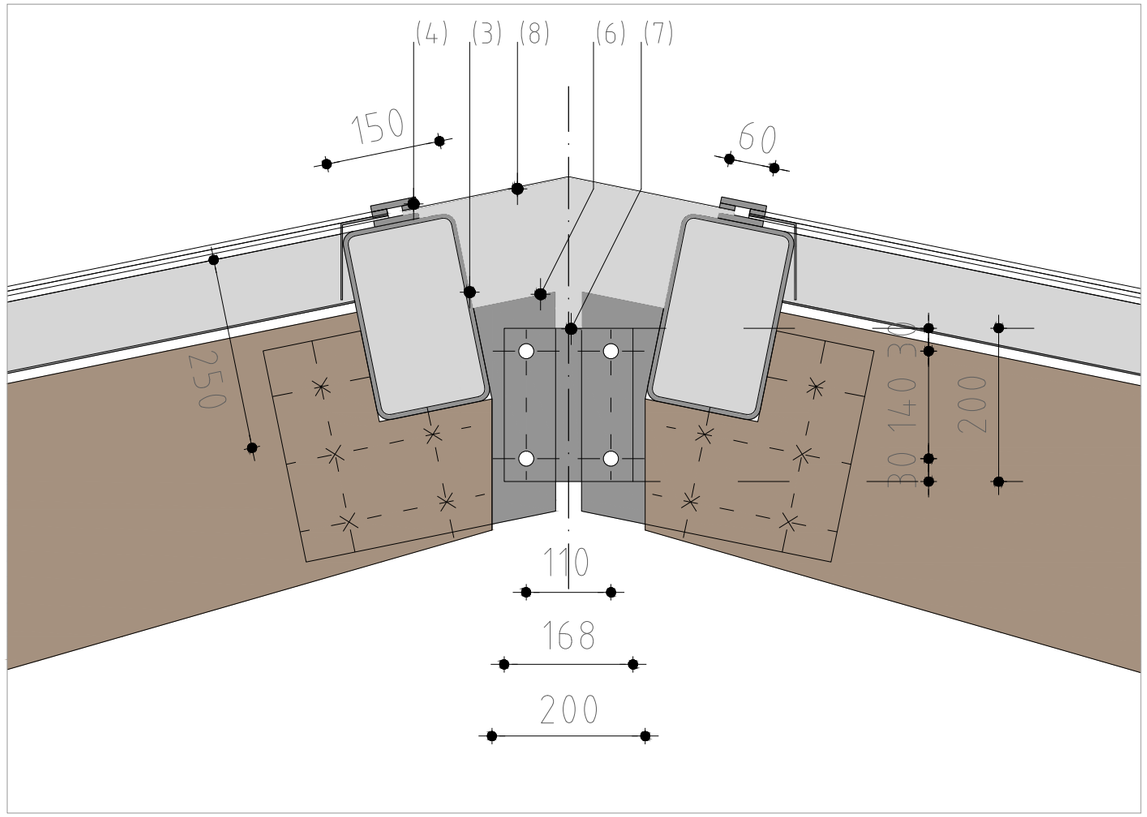

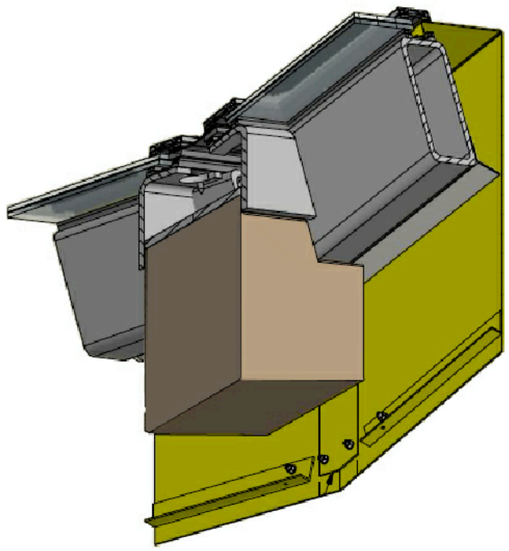

DETAIL 5

(1) Hout ligger, vuren, transparant coating, 320-730-320, 10 m.
(2) Hout ligger, vuren, transparant coating, 320-730, 3m.
(3) Koker, verzinkt, RAL 9004 - signal black, 250x150x6.3, 2.78m.
(4) Glasbevestiging, Stabalux profiel, 60x20mm.
(5) Zetwerk, RVS, RAL 1018 - zinc yellow, t=1.5 mm
(6) Interne staalplaat, t= 15mm. + 5 M16.
(7) Staalplaat, t=10mm. + 4x M20.
(8) Zetwerk, RVS, RAL 9004 - signal black, t=1.5 mm

Locatie:	-
Naam:	Detail 5, Detail 5" (extension)
Tekening:	Double station
Nummer:	-
Datum:	17/07/2017
Formaat:	A3
Schaal:	1:8

FASTNED
James Wattstraat 77-79 | 1097 DL Amsterdam | T: 020-7155316 | E: contact@fastned.nl

Deze tekening is in het bezit van Fastned BV. Zij mag niet zonder onze voorafgaande uitdrukkelijke toestemming worden gebruikt, vermenigvuldigd, of aan derden worden verstrekt.

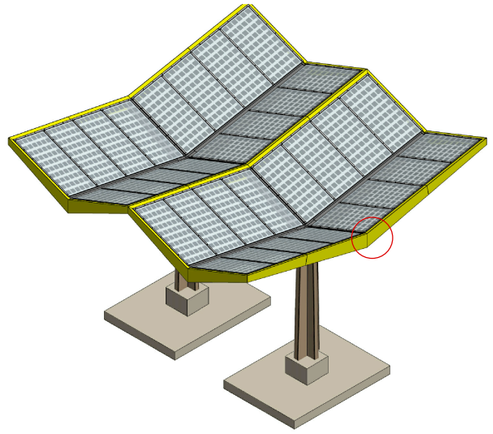

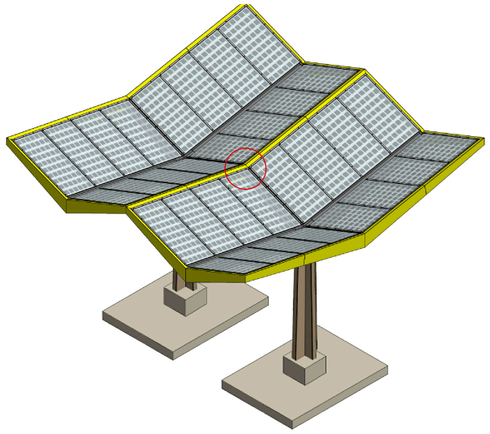

DETAIL 6

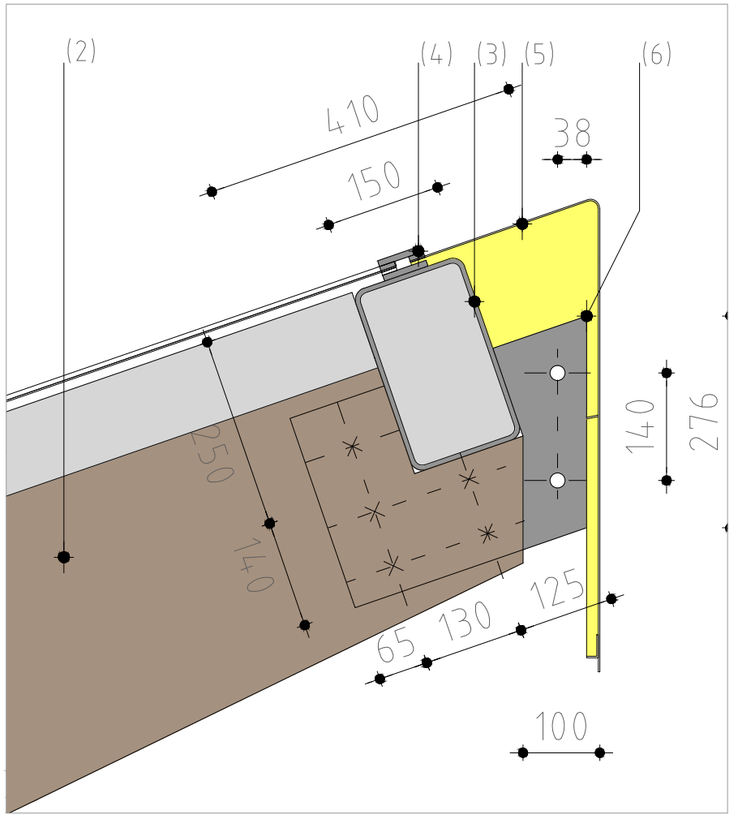

DETAIL 6"

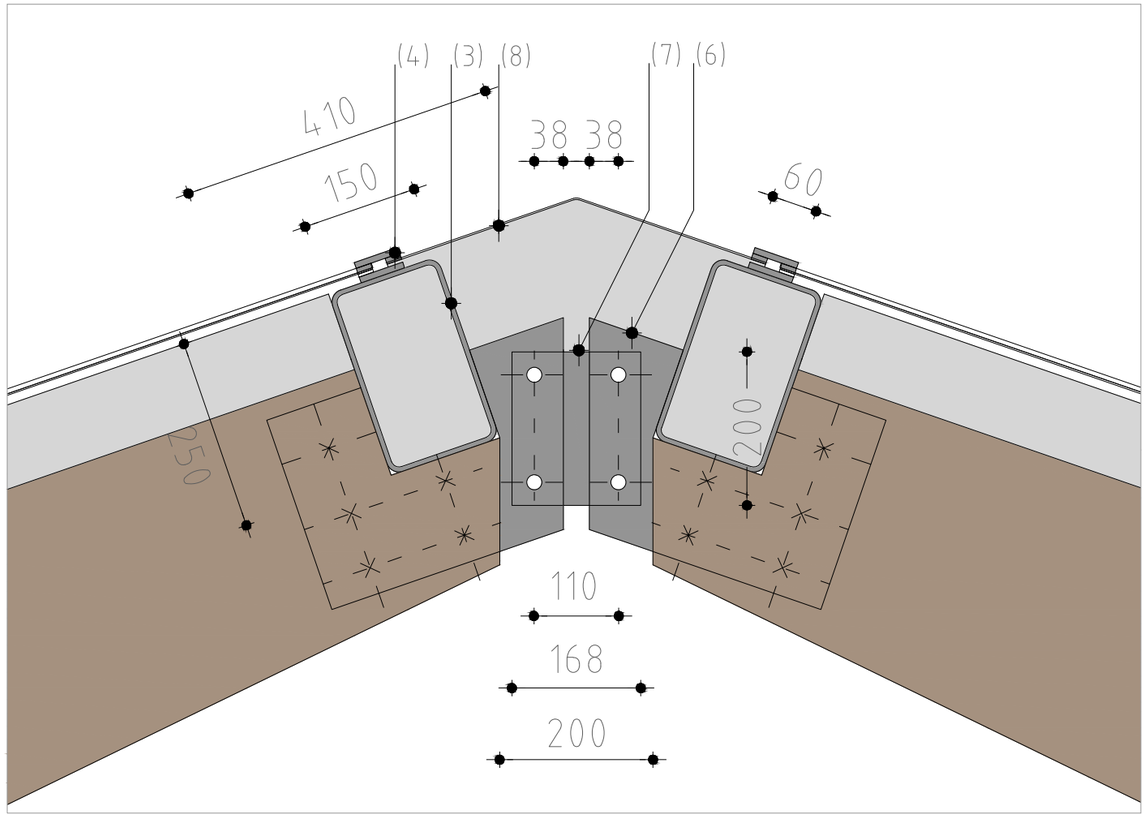

(1) Hout ligger, vuren, transparant coating, 320-730-320, 10 m.
(2) Hout ligger, vuren, transparant coating, 320-730, 3m.
(3) Koker, verzinkt, RAL 9004 - signal black, 250x150x6.3, 2.78m.
(4) Glasbevestiging, Stabalux profiel, 60x20mm.
(5) Zetwerk, RVS, RAL 1018 - zinc yellow, t=1.5 mm
(6) Interne staalplaat, t= 15mm. + 5 M16.
(7) Staalplaat, t=10mm. + 4x M20.
(8) Zetwerk, RVS, RAL 9004 - signal black, t=1.5 mm

Locatie:	-
Naam:	Detail 6, Detail 6" (extension)
Tekening:	Double station
Nummer:	-
Datum:	17/07/2017
Formaat:	A3
Schaal:	1:8

FASTNED
James Wattstraat 77-79 | 1097 DL Amsterdam | T: 020-7155316 | E: contact@fastned.nl

Deze tekening is in het bezit van Fastned BV. Zij mag niet zonder onze voorafgaande uitdrukkelijke toestemming worden gebruikt, vermenigvuldigd, of aan derden worden verstrekt.

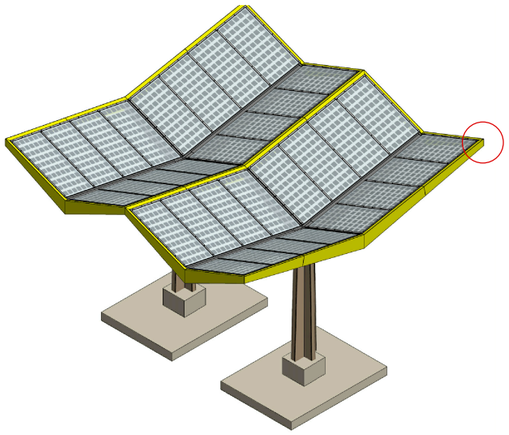

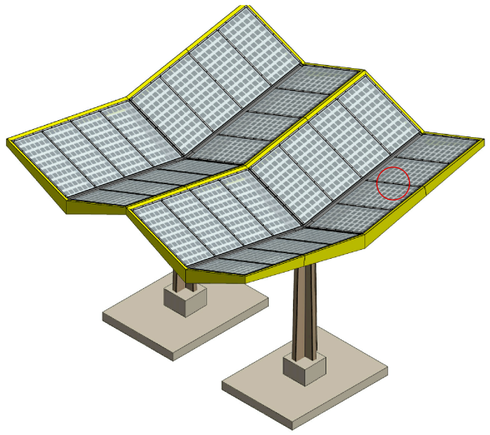

DETAIL 8

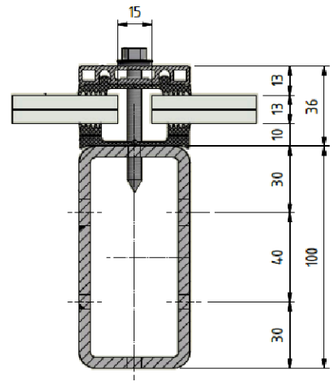

DETAIL 7

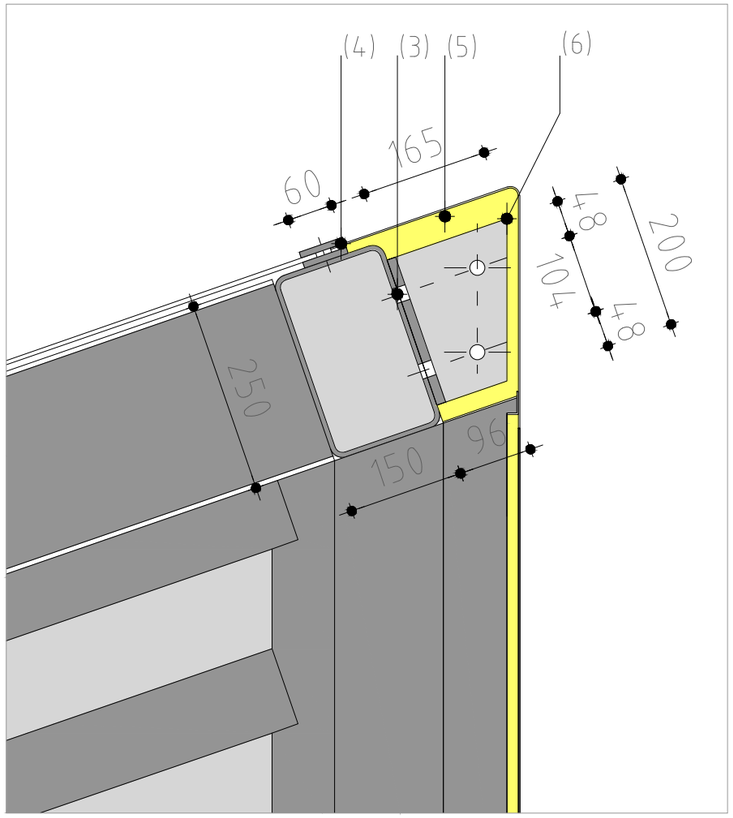

DETAIL 8

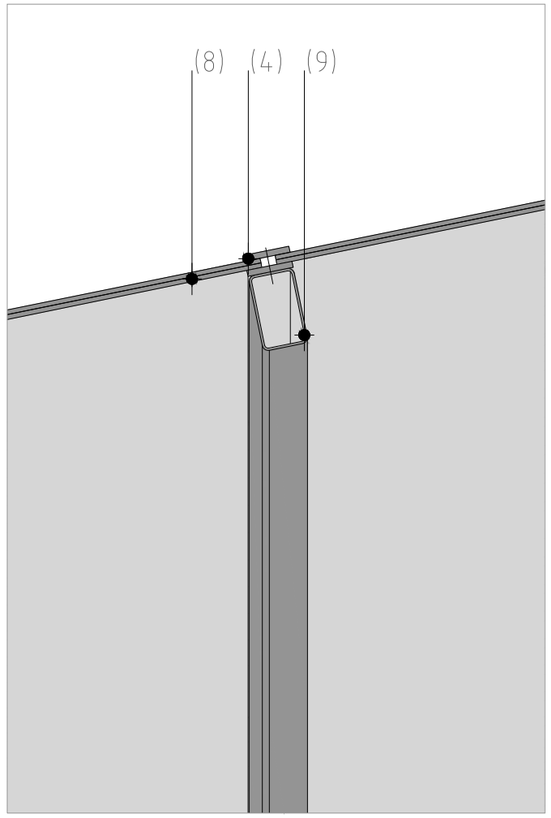

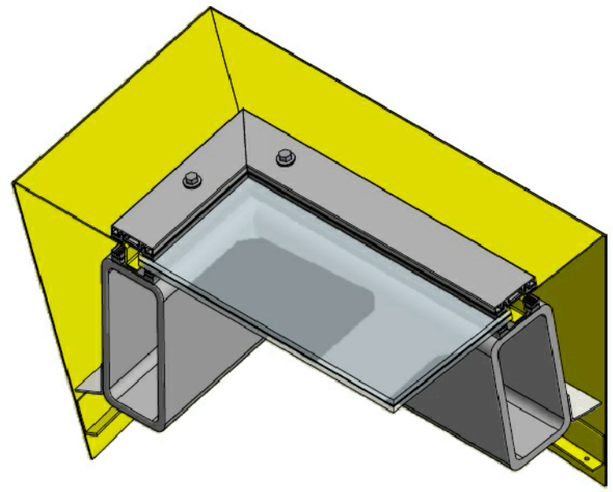

DETAIL 7

(1) Hout ligger, vuren, transparant coating, 320-730-320, 10 m.
(2) Hout ligger, vuren, transparant coating, 320-730, 3m.
(3) Koker, verzinkt, RAL 9004 - signal black, 250x150x6.3, 2.78m.
(4) Glasbevestiging, Stabalux profiel, 60x20mm.
(5) Zetwerk, RVS, RAL 1018 - zinc yellow, t=1.5 mm
(6) Staalplaat, t= 15mm. + 4 M20.
(7) Staalplaat, t=10mm. + 4x M20.
(8) Zonnepanelen, glas/glas, 6/6mm.
(9) Koker, verzinkt, RAL 9004 - signal black, 100x60x3.2, 2.75m.

Locatie:	-
Naam:	Detail 7, Detail 8
Tekening:	Double station
Nummer:	-
Datum:	17/07/2017
Formaat:	A3
Schaal:	1:8

FASTNED
James Wattstraat 77-79 | 1097 DL Amsterdam | T: 020-7155316 | E: contact@fastned.nl

Deze tekening is in het bezit van Fastned BV. Zij mag niet zonder onze voorafgaande uitdrukkelijke toestemming worden gebruikt, vermenigvuldigd, of aan derden worden verstrekt.

BARTELS
INGENIEURS VOOR BOUW & INFRA

Rapport toepasbaar in:
NL: Windgebied II/III, (on)bebouwd
DE: Sneeuwzone 1-2 < 500m ü.d.M.
Windzone 1-3

Project	FastNed v4.0 - Nederland/Duitsland
Onderwerp	Statische berekening bovenbouw
Projectnummer	AN10583
Documentnummer	UO-H00.03
Status	Definitief

Datum	26-07-2017	Auteur	B.J.C. de Leijer MSc.
Versie	1.1	Vrijgave	ing. W. van de Zande

Project- en documentgegevens

Projectrelaties

Opdrachtgever	FastNed B.V.
Contactpersoon	dhr. P. Verwoert
Adres	James Wattstraat 77
Plaats	1079 DL Amsterdam
Telefoon	06 – 204 35 750
E-mail	Pieter.verwoert@fastned.nl

Opsteller rapport	Bartels Ingenieursbureau B.V.	
Adviestaak	Hoofdconstructeur	
Unit / Vestiging	Constructie / vestiging Apeldoorn	
Projectnummer	AN10583	
Contactpersoon	B.J.C. de Leijer MSc.	
Adres	Linie 524	Postbus 10217
Plaats	7325 DZ Apeldoorn	7301 GE Apeldoorn
Telefoon	055 - 368 05 40	
E-mail	wvandezande@bartels.nl	
	bdeleijer@bartels.nl	

Projectteam	
Projectleider	ing. W. van de Zande
Constructeur	B.J.C. de Leijer MSc.

Rapporthistorie

Versie	Datum	Omschrijving
v1.0	17-07-2017	Concept
v1.1	26-07-2017	definitief

Verantwoording

	Datum	Naam	paraaf auteur	paraaf controle	paraaf vrijgave
Auteur	26-07-2017	B.J.C. de Leijer MSc.			
Controle	26-07-2017	ing. W. van de Zande			
Vrijgave	26-07-2017	ing. W. van de Zande			

INHOUDSOPGAVE

1	**Algemeen**	**5**
1.1	Inleiding	5
1.2	Definitie	6
1.3	Algemene projectgegevens	6
2	**Ontwerpuitgangspunten**	**7**
2.1	Algemeen	7
2.2	Functie bouwwerk	7
2.3	Gevolgklasse, ontwerplevensduur en belastingfactoren	7
2.4	Belastingcombinaties voor het gebouw:	8
2.5	Veiligheidsfilosofie	8
2.5.1	Buitengewone belastingen	8
2.5.1.a	Buitengewone belasting: brand	8
2.5.1.b	Overige buitengewone belastingen	8
2.6	Belastingen	8
2.7	Buitengewone belastingen	9
2.7.1	Explosiebelastingen	9
2.7.2	Aanrijdbelastingen	9
2.7.3	Brandwerendheid	9
2.7.4	Temperatuur	9
2.7.5	Extreme grondwaterstanden	9
2.7.6	Extreme wind bij geopende ramen	9
2.8	Constructieve samenhang	10
2.9	Materialen en kwaliteiten	10
2.10	Vervormingen	11
2.11	Dilataties	11
3	**Opbouw 3d model**	**12**
3.1	Geometrie en constructieopzet	12
3.2	Invoer belastingen	14
3.2.1	BG1: Eigen gewicht constructie	14
3.2.2	BG2: Permanente belasting	14
3.2.3	BG3: Sneeuwbelasting	16
3.2.4	BG4 t/m BG11 Windbelasting	19
3.2.5	BG12: Opgelegde dakbelastingen	26
3.2.6	Waterbelasting	26
3.2.7	Temperatuurbelasting	26
3.3	Overzicht Ψ-factoren en belastingcombinaties	27
4	**Resultaten**	**29**
4.1	Vervormingen	29
4.2	Toetsing houten onderdelen	31
4.2.1	Overzicht krachten	31
4.2.2	Dakliggers gebogen	34
4.2.3	Korte dakliggers	35
4.2.4	Houten kruiskolom	36
4.3	Toetsing stalen onderdelen	38
4.3.1	Overzicht krachten	38
4.4	Overzicht reactiekrachten	41

5 Toetsing eigen frequentie 43

Bijlage I: Overzicht brandwerendheidseisen I-1

Bijlage II: Uitvoer 3d model II-1

1 Algemeen

1.1 Inleiding

Voor het project nieuwbouw van FastNed v4.0 - Nederland/Duitsland, is door FastNed B.V. aan Bartels Ingenieursbureau B.V. opdracht verstrekt voor de advisering van de constructieve draagstructuur. In dit rapport worden de resultaten weergegeven van het engineeringproces van de fase uitvoeringsgereed ontwerp. Het rapport vormt het totaalrapport van alle constructieve onderdelen met uitzondering van de funderingsconstructie.

In Nederland worden ca. 200 laadstations gerealiseerd. Alle onderdelen van het laadstation zijn uitgerekend volgens windgebied II, onbebouwd, waardoor het op iedere lokatie die valt in windgebied II en III in Nederland gepositioneerd kan worden, met uitzondering van de kustgebieden. Dit rapport dient dan ook als uitgangspuntenrapport / statische berekening voor al deze stations, alsmede een groot gebied van Duitsland. In Duitsland wordt het toepasbaar gebied van het station bepaald door de optredende sneeuwbelasting. Er is door de opdrachtgever gekozen voor gebieden die vallen in sneeuwzone 1 en 2, met ligging < 500m ü.d.M. (boven zeepeil). Ook windzone 4 in Duitsland is uitgesloten. Deze zone is vergelijkbaar met windgebied I in Nederland.

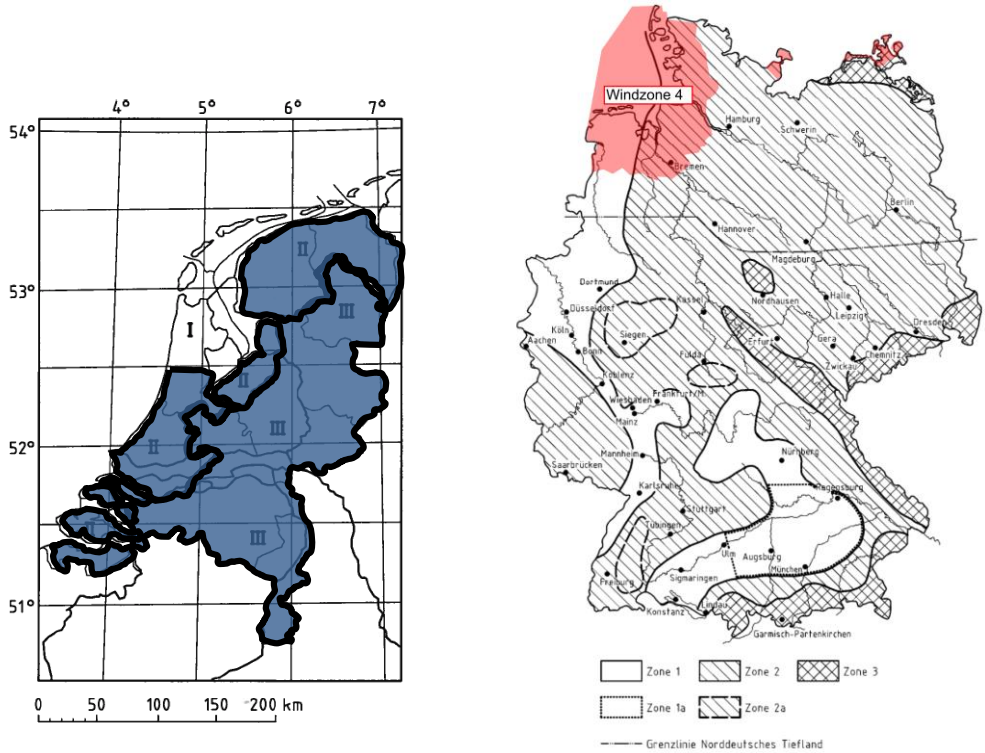

Figuur 1: Overzicht windgebieden Nederland, sneeuwgebieden Duitsland+windzone 4

Dit rapport bevat naast een beschrijving van de ontwerpuitgangspunten een beschrijving van de constructieve hoofdopzet én de statische berekeningen van de constructieve onderdelen van de bovenbouw. Het ontwerp van de constructieve draagstructuur is vastgelegd op de tekeningen van de houtleverancier en FastNed B.V.

Op basis van grondonderzoek zal de fundering per lokatie worden ontworpen en getoetst en in een separaat advies worden behandeld. Het e.e.a. is nader toegelicht in dit rapport.

1.2 Definitie

De adviestaak van Bartels Ingenieursbureau B.V. heeft betrekking op de constructieve draagstructuur van het project. Omdat een aantal elementen die hieronder vallen, niet vallen onder de definities uit de NEN6702 van “hoofddraagconstructie” en “hoofddraagconstructie bij brand”, wordt in dit document de term constructieve draagstructuur gehanteerd. Hiervoor wordt de volgende definitie gegeven:

Constructieve draagstructuur:
Tot de constructieve draagstructuur worden de volgende elementen gerekend:
- elementen die vallen onder “hoofddraagconstructie” zoals gedefinieerd in de NEN6702
- elementen die vallen onder “hoofddraagconstructie bij brand” zoals gedefinieerd in de NEN6702
- elementen ten behoeve van verticale draagkracht, waarbij lokaal bezwijken van mogelijk is. Voorbeelden hiervan zijn daken, balkon- en galerijconstructies, trappen

Dit project wordt uitgewerkt volgens de Eurocode. In bovenstaande definitie is gebruik gemaakt van de definities uit de NEN 6702, omdat deze termen niet meer in de Eurocode worden genoemd. Alleen in het Bouwbesluit 2012 wordt de term ‘bouwconstructie’ vermeld (= onderdeel van een bouwwerk dat bestemd is om belasting te dragen).

1.3 Algemene projectgegevens

Het project betreft de nieuwbouw van een laadstation voor elektrische auto's. Het laadstation komt op enige afstand van een tankstation aan de snelweg te staan.

Kengetallen

Lengte (m)	ca. 10 m
Breedte (m)	ca. 12 m
Hoogte (m)	ca. 7 m

2 Ontwerpuitgangspunten

2.1 Algemeen

In dit hoofdstuk worden de ontwerpuitgangspunten vermeld die de basis vormen voor het constructief ontwerp van het project. De informatie is gebaseerd op het programma van eisen en het bouwbesluit. Tevens zijn de ontwerpgegevens opgenomen die volgen uit de interactie met de overige ontwerpdisciplines zoals deze in het ontwerptraject tussen betrokken partijen zijn bepaald.

Met betrekking tot de belastingen geldt dat naast de in dit hoofdstuk vermelde belastingen, het gestelde in NEN-EN 1990 (Eurocode 0 met Nationale Bijlage) en NEN-EN 1991 (Eurocode 1 met Nationale bijlage) als minimumeis onverkort van kracht blijft.

2.2 Functie bouwwerk

De gebouwcategorieën worden conform tabel NB.2-A1.1 uit NEN-EN 1990 als volgt bepaald:
- Categorie H: daken

2.3 Gevolgklasse, ontwerplevensduur en belastingfactoren

De constructie van dit gebouw moet worden berekend volgens de NEN-EN 1990 + NB (2011) – Grondslagen van het constructief ontwerp. Het gebouw wordt gezien als een overig bouwwerk, niet zijnde een gebouw, welke in gevolgklasse CC1 wordt geclassificeerd.

In overleg met de opdrachtgever is gekozen de constructie te berekenen volgens gevolgklasse CC2.

gevolgklasse	CC2			
betrouwbaarheidsklasse	RC2			
K_{FI}-factor voor belastingen	1,0			
ontwerplevensduur	15 jaar (klasse 2)			
uiterste grenstoestand	Permanente belasting	$\gamma_{;f;g;ongunstig}$	1,2	1,35*
	Permanente belasting	$\gamma_{;f;g;gunstig}$	0,9	
	Veranderlijke belasting	$\gamma_{;f;q}$	1,5	
bruikbaarheidsgrenstoestand	Permanente belasting	$\gamma_{;f;g;ongunstig}$	1,0	
	Permanente belasting	$\gamma_{;f;g;gunstig}$	1,0	
	Veranderlijke belasting	$\gamma_{;f;q}$	1,0	
* afhankelijk van de beschouwde combinatie				

Gezien het station wordt toegepast in delen van Europa waar niet gereduceerd mag worden op de belastingen, wordt de reductiefactor niet meegenomen in het ontwerp.

2.4 Belastingcombinaties voor het gebouw:

Belastingcombinaties in de uiterste grenstoestanden worden aangenomen volgens art. 6.4.3 van de NEN-EN 1990 en DIN-EN 1990. In het algemeen geldt voor deze combinaties:

- Voor elk kritiek belastingsgeval moeten de rekenwaarden van de belastingseffecten (E d) zijn bepaald door het combineren van belastingswaarden die geacht worden gelijktijdig op te treden.
- Elke combinatie van belastingen behoort te omvatten:
    - een overheersende veranderlijke belasting, of
    - een buitengewone belasting.
- Wanneer de resultaten van een toetsing zeer gevoelig zijn voor variaties in grootte van een blijvende belasting van plaats tot plaats in de constructie, moeten de ongunstige en gunstige delen van deze belasting zijn beschouwd als afzonderlijke belastingen.
- Waar verscheidene effecten van één belasting (bijv. buigend moment en normaalkracht ten gevolge van eigen gewicht) niet volledig bij elkaar aansluiten, mag de partiële factor, toegepast op welk gunstig effect dan ook, zijn verlaagd.
- Opgelegde vervormingen behoren in rekening te zijn gebracht daar waar van toepassing

Belastingcombinaties in de bruikbaarheids grenstoestanden worden aangenomen volgens art. 6.5.3 van de NEN-EN 1990 en DIN-EN 1990.

2.5 Veiligheidsfilosofie

2.5.1 Buitengewone belastingen

Het bezwijken van een deel van de bouwconstructie door een buitengewone belasting mag niet leiden tot het bezwijken van een bouwconstructie die niet in de directe nabijheid van het bezweken onderdeel zijn gelegen. Omdat de constructie officieel in gevolgklasse CC1 is gecategoriseerd, behoeven buitengewone belastingen niet te worden beschouwd.

2.5.1.a Buitengewone belasting: brand

De constructie van het gebouw heeft volgens het bouwbesluit géén brandwerendheidseis. Zie hiervoor Bijlage I.

2.5.1.b Overige buitengewone belastingen

In paragraaf 2.3 is de gevolgklasse van het gebouw aangegeven. Er is aangegeven dat het gebouw volgens gevolgklasse CC2 wordt berekend, maar normaal gesproken in gevolgklasse CC1 valt. Volgens de NEN-EN-1991-1-7, art. 3.4 is een specifieke beschouwing voor buitengewone belastingen is niet noodzakelijk, behalve om te verzekeren dat is voldaan aan de van toepassing zijnde regels voor robuustheid en stabiliteit zoals vermeld in EN 1990 t.m. EN 1999;

2.6 Belastingen

De uitgangspunten m.b.t. de belastingen worden besproken in het volgende hoofdstuk

2.7 Buitengewone belastingen

In paragraaf 2.5 is het e.e.a. reeds toegelicht m.b.t. de constructieve draagstructuur en buitengewone belastingen: Volgens de NEN-EN-1991-1-7, art. 3.4 is een specifieke beschouwing voor buitengewone belastingen is niet noodzakelijk, behalve om te verzekeren dat is voldaan aan de van toepassing zijnde regels voor robuustheid en stabiliteit zoals vermeld in EN 1990 t/m EN 1999.
Toch worden hieronder de verschillende buitengewone belastingen toegelicht.

2.7.1 Explosiebelastingen

Onder de constructie staan regelmatig auto's. Ontploffingsgevaar van een elektrische auto is onwaarschijnlijk. Explosiebelastingen zijn niet van toepassing.

2.7.2 Aanrijdbelastingen

In de directe nabijheid van het bouwwerk is regelmatig verkeer aanwezig. Volgens de eurocode is een nadere beschouwing niet nodig omdat het gebouw binnen CC1 valt. Wanneer een auto met een hoge snelheid tegen een spantbeen zou rijden, zal het spant op zijn minst grote schade vertonen. Echter, vanwege de afmetingen van het spant wordt het zeer onwaarschijnlijk geacht dat een auto het spant er volledig onderuit rijdt. Zou dit toch gebeuren, dan zal het bouwwerk op 3 poten rusten en wellicht grote scheefstand vertonen. De aanwezige trekbanden in de vorm van windverbanden in combinatie met de houten balken zorgen voor samenhang van de constructie waardoor de kans dat een gording of ander constructieonderdeel zal vallen gering wordt geacht. Gevaar voor de omgeving ontstaat hierdoor niet of is gering.

2.7.3 Brandwerendheid

De constructie dient de brandwerendheid beoordeeld te worden bij brand. De karakteristieke waarden van belasting bij brand volgens NEN-EN1991-1-2. De in rekening te brengen belastingcombinaties voor de ‘buitengewone ontwerpsituatie - brand’ zijn als aangegeven in ‘bijlage A1.3 – tabel NB.7-A1.3 ‘Buitengewone situaties’ van NEN-EN1990.

Voor de brandwerendheidseis van de constructieve draagstructuur zijn de volgende aspecten bepalend:
- gebouwen zonder logiesfunctie; hoogste niveau verblijfsvloer < 5 m + Peil: 0 minuten

Hieruit volgt dat de constructieve draagstructuur geen brandwerendheidseis heeft en niet getoetst wordt op de belastingcombinatie brand.

2.7.4 Temperatuur

Belastingen op de constructieve draagstructuur ten gevolge van temperatuursverschillen van de omgeving treden niet op of zijn van ondergeschikt belang.

2.7.5 Extreme grondwaterstanden

Belastingen door extreme grondwaterstanden treden niet op. Het gehele gebouw bevindt zich boven het maaiveld waardoor er geen kans bestaat op opdrijven of schade door een hoge grondwaterstand.

2.7.6 Extreme wind bij geopende ramen

Niet van toepassing.

2.8 Constructieve samenhang

Het gebouw bestaat uit verschillende onderdelen die tezamen zorg dragen voor de verticale krachtsafdracht en stabiliteit. Hieronder worden de verschillende onderdelen opgesomd.

- De houtconstructie bestaat uit een samengestelde kruiskolom. Hierop wordt een gebogen ligger met een geprojecteerde lengte van +/-10m op gemonteerd. De verbinding wordt momentvast uitgevoerd.
- Aan deze gebogen ligger worden twee uitkragende liggers bevestigd, die momentvast worden verbonden aan elkaar, zodoende een doorlopende ligger ontstaat.
- De stalen kokers rondom het station, K250x150x6 worden momentvast met elkaar verbonden. De kokers K100x60x4 worden hieraan gemonteerd, zodoende een stijf raamwerk ontstaat. Dit raamwerk wordt grotendeels scharnierend verbonden met de houtconstructie. Door de momentvaste verbindingen in het dakvlak zijn geen windverbanden benodigd.
- Het dak wordt volgelegd met zonnepanelen. De detaillering wordt afgestemd met het vervormingsbeeld wat volgt uit het 3d model. Op het hout wordt een stalen strip gemonteerd waarop de zonnepanelen kunnen worden gelegd.
- Fundering. De fundering is dusdanig ontworpen dat altijd dezelfde poerafmetingen kunnen worden gebruikt. Wanneer de grond ongeschikt is voor een fundering op staal, worden palen aangebracht en met de poer verbonden.
- Voor de constructieve samenhang worden in NEN-EN 1991-1-7 bijlage A aanbevolen strategieën vermeld. Het gebouw wordt geclassificeerd in gevolgklasse 1. Dit betekend dat er verder geen specifieke beschouwing noodzakelijk is voor buitengewone belastingen door onbekende oorzaken.

2.9 Materialen en kwaliteiten

Beton	
funderingspoeren en palen	C45/55
Constructiestaal	
Kokerprofielen	S275 koudgevormd
ankers	sterkteklasse 8.8
bouten, algemeen	sterkteklasse 8.8
moeren, algemeen	sterkteklasse 8
diverse verbindingsmiddelen hout	varierend van 4.6 tot 8.8
Hout	
constructiehout dragende spanten en balken, gelamineerde liggers	GL28h

2.10 Vervormingen

Aanvullend op het bouwbesluit, worden in deze paragraaf de vervormingeisen aangegeven die bij het ontwerp en uitvoering gehanteerd dienen te worden.

Verticale vervorming van daken	
bijkomende doorbuiging van dak	$u_{;bii} \leq 0{,}004 \times L_{;rep}$
einddoorbuiging van daken	$u_{;eind} \leq 0{,}004 \times L_{;rep,}$ afschot groter dan 1,6%
Horizontale vervorming van gevels en stabiliteitselementen	
horizontale doorbuiging gebouw met 1 bouwlaag	$u \leq h/150$ ($L_{;rep}$ is de lengte van de overspanning of twee maal de uitkraging)

De leverancier van de zonnepanelen dient kritisch te kijken naar de optredende vervorming, als beschreven in dit rapport. Vervormingen dienen opgenomen te kunnen worden door de toegepaste detaillering.

2.11 Dilataties

Er worden in het gebouw geen constructieve dilataties toegepast.

3 Opbouw 3d model

3.1 Geometrie en constructieopzet

In onderstaand figuur is een overzicht te zien van het ingevoerde 3d model. Er wordt gebruikt gemaakt van RFEM versie 09.01.

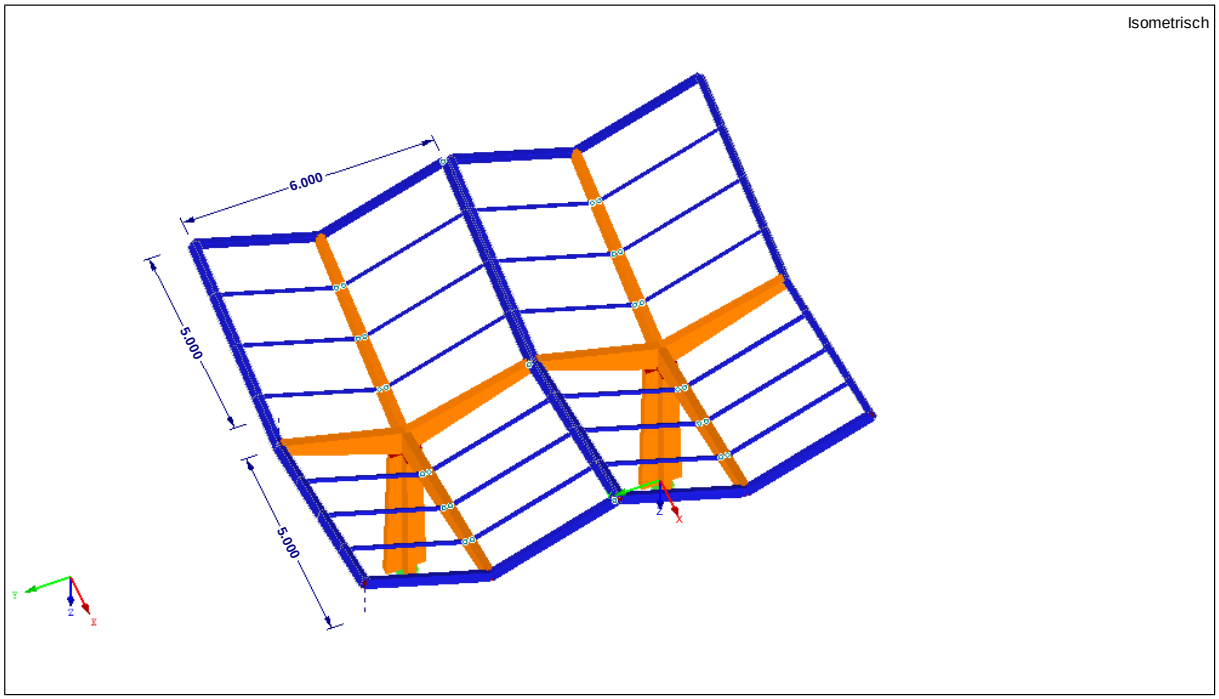

Figuur 2: Invoer 3d model

Constructief ontwerp Fastned 4.0

Ontwerp voor Duitsland (sneeuwzone 2 < 500m ü.d.M., windzone 4) en Nederland (windgebied II,onbeb.)

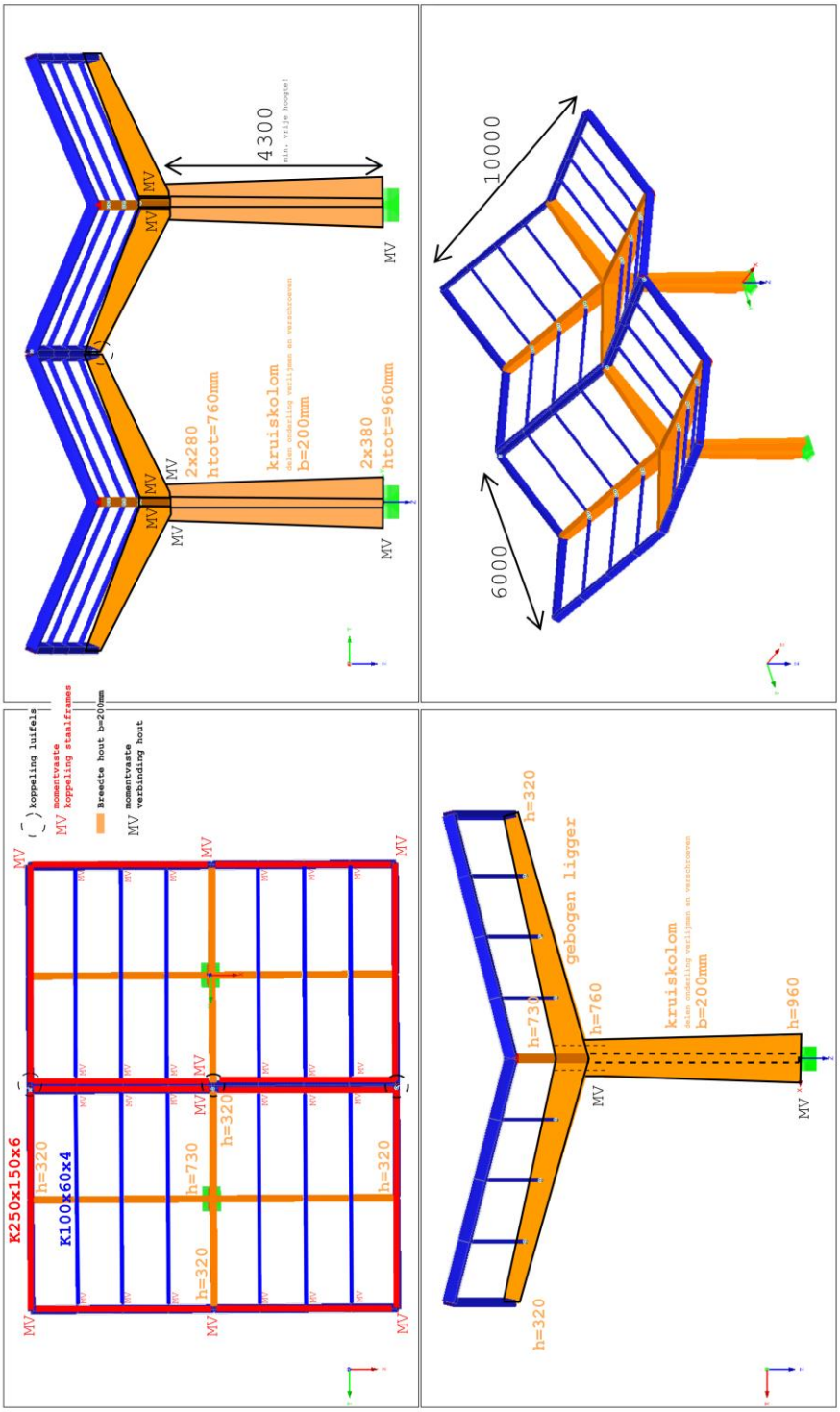

sterkteklasse hout: GL28h
kwaliteit kokers: S275

AN10583-blr
12-07-2017

BARTELS
INGENIEURS VOOR BOUW & INFRA

3.2 Invoer belastingen

In deze paragraaf worden de belastingen besproken die optreden bij het station. Tevens wordt de invoer in het 3d model in beeld gebracht.

3.2.1 BG1: Eigen gewicht constructie

Het eigen gewicht van de constructie wordt door RFEM zelf bepaald.
Er wordt gerekend met de volgende dichtheid van de materialen:
ρ_{staal}= 78,50 kN/m^3
ρ_{hout}= 5,00 kN/m^3

3.2.2 BG2: Permanente belasting

De zonnepanelen wegen 110 kg per paneel. Er worden in totaal 16 panelen per kolom toegepast. De totale reactie van dit belastinggeval in RFEM dient dus te zijn: 1,10 x 2 x 16 = 35,2 kN.
De belasting wordt iteratief bepaald op: g_k = 0,263 kN/m^1

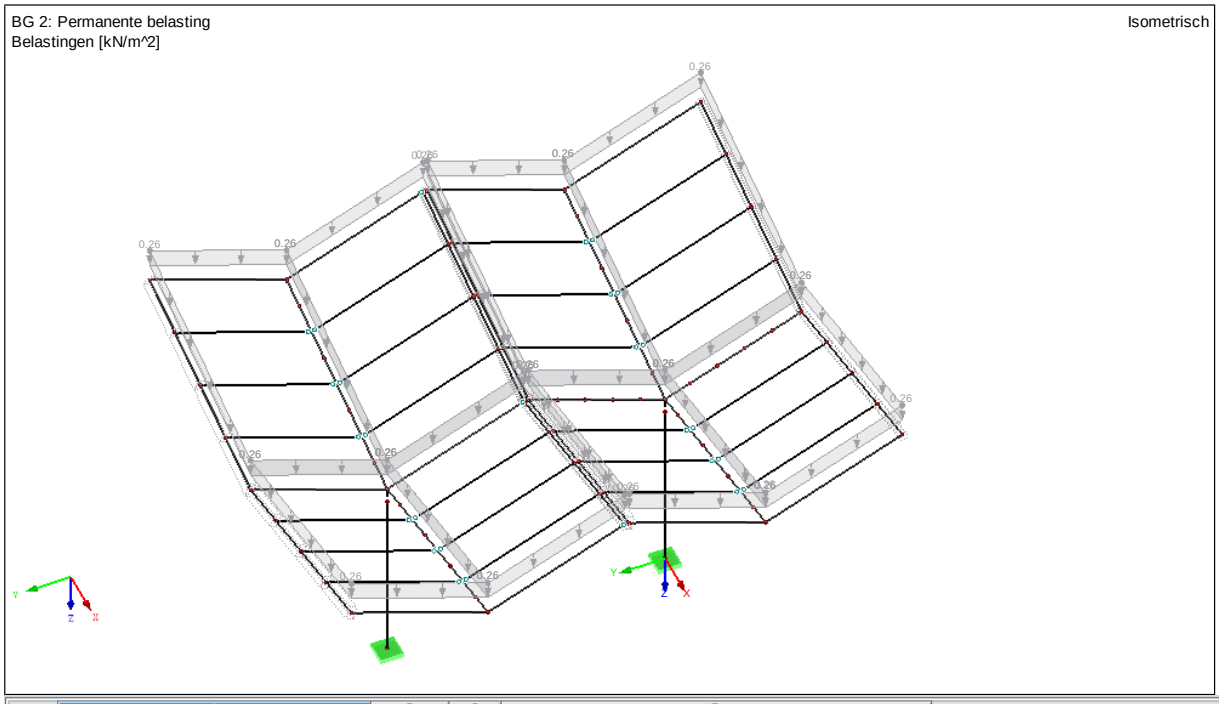

	A	B	C	D
	Omschrijving	Waarde	Eenheid	Commentaar
	BG2 - Permanente belasting			
	Som van belastingen in X	0.00	kN	
	Som van de reactiekrachten in X	0.00	kN	
	Som van belastingen in Y	0.00	kN	
	Som van de reactiekrachten in Y	0.00	kN	
	Som van belastingen in Z	35.22	kN	
	Som van de reactiekrachten in Z	35.22	kN	Afwijking: 0.00 %
	Resultante reacties om X	0.000	kNm	In het zwaartepunt van het model (X: 0.000, Y: 3.050, Z: -5.121 m)
	Resultante reacties om Y	0.000	kNm	In het zwaartepunt van het model
	Resultante reacties om Z	0.000	kNm	In het zwaartepunt van het model
	Max. verplaatsing in x-richting	0.6	mm	Staaf No. 17, x: 0.815 m
	Max. verplaatsing in y-richting	-0.7	mm	Staaf No. 22, x: 1.630 m
	Max. verplaatsing in z-richting	2.7	mm	Staaf No. 79, x: 1.290 m
	Max. vector verplaatsing	2.8	mm	Staaf No. 79, x: 1.290 m

Figuur 3: Invoer permanente belasting en overzicht reactiekracht van belastinggeval

Bovenstaande belasting wordt automatisch door RFEM verdeeld over de verschillende constructieve onderdelen. Zie ook onderstaand figuur. Om te zien welke belasting is ingevoerd wordt in de volgende belastinggevallen altijd de algehele invoer weergegeven, en wordt de belasting niet separaat weergegeven.

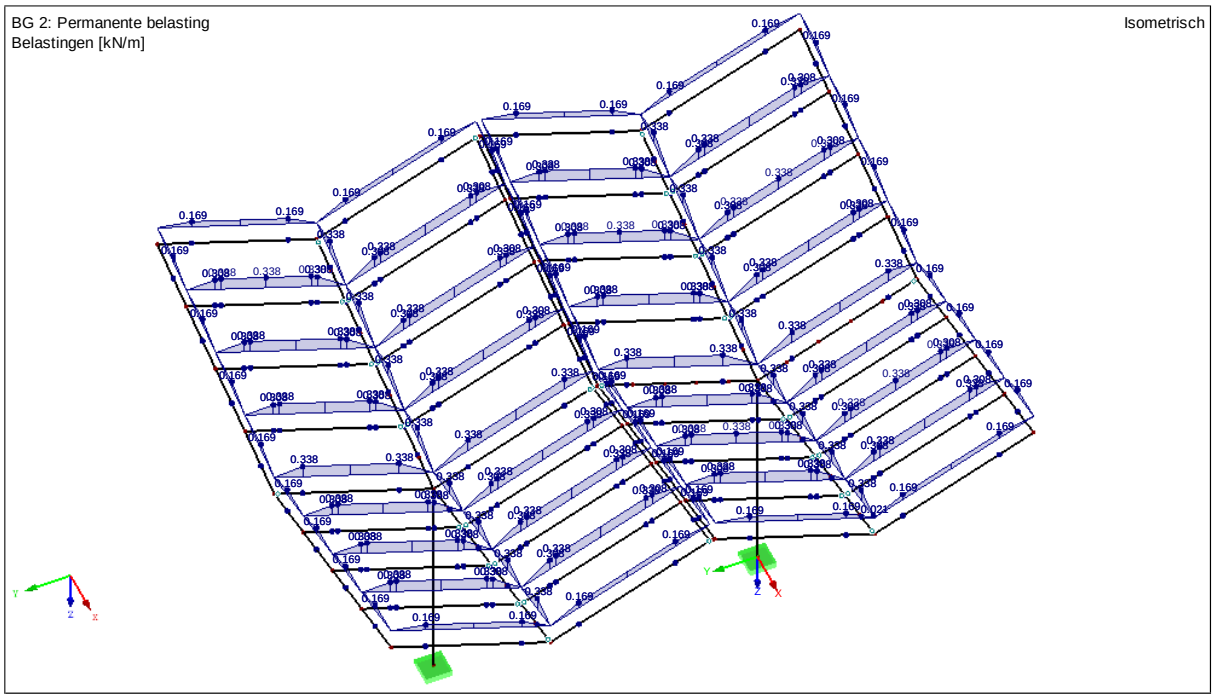

Figuur 4: Invoer permanente belasting en overzicht reactiekracht van belastinggeval (separaat)

3.2.3 BG3: Sneeuwbelasting

Nederland:

De sneeuwbelasting is niet maatgevend t.o.v. de sneeuwbelasting in Duitsland

Duitsland:

Het station mag worden toegepast in sneeuwzone 1 en 2, volgens opgave opdrachtgever. Maximale hoogte boven zeepeil: 500 meter ü.d.M. Locaties die hoger liggen dan dit niveau of in sneeuwgebieden 2a en 3 liggen dienen separaat te worden bekeken.

Basis sneeuwlast:

S_k= 0,25 + 1,91 x ((500+140)/760)^2= 1,60

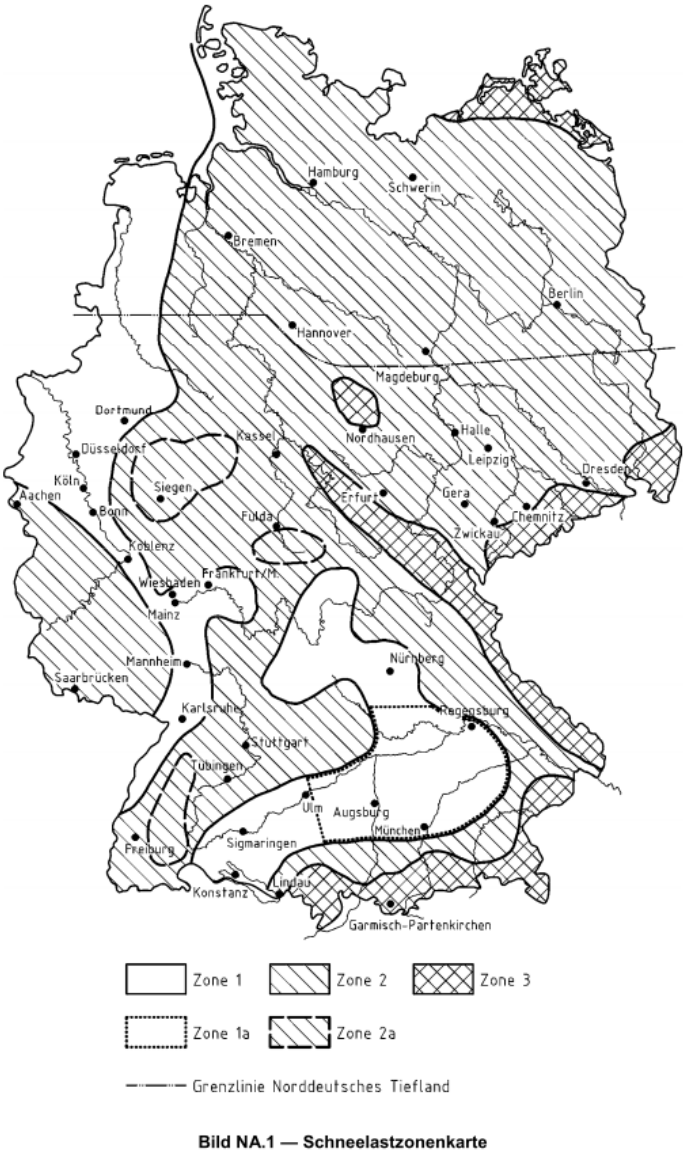

Bild NA.1 — Schneelastzonenkarte

Figuur 5: Overzicht sneeuwzones Duitsland

Belastingen op 3d model:

Door de vorm van de overkapping ontstaat er sneeuwophoping:
Onderstaand figuur toont de dakhoeken.

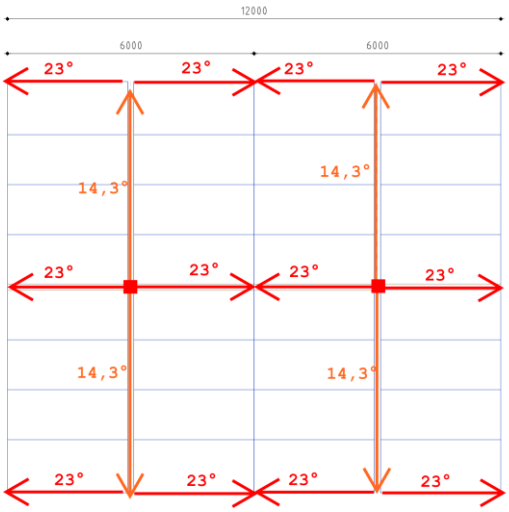

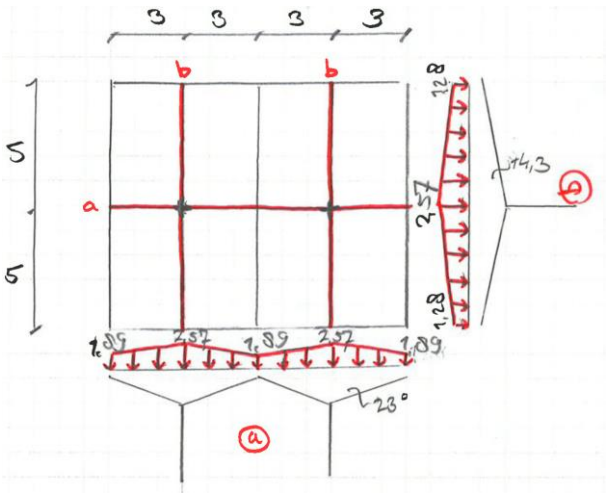

Figuur 6:Dakhoeken met sneeuwophoping per zijde

Algemeen

karakteristieke sneeuwbelasting	s_k	1,6	kN/m^2	(herh.tijd 50 jaar)	*NEN-EN 1991-1-3 art. 4.1*
karakteristieke sneeuwbelasting	s_n	1,6	kN/m^2	(herh.tijd n jaar)	*NEN-EN 1991-1-3 bijlage L*
warmtecoëfficiënt	C_t	1,0			*NEN-EN 1991-1-3 art. 5.2*
blootstellingscoëfficiënt	C_e	1,0			*NEN-EN 1991-1-3 art. 5.2*

Daken met meer dan één overspanning *NEN-EN 1991-1-3 art. 5.3.4*

dakhelling	α_1	14,3	°		
dakhelling	α_2	14,3	°		
gemiddelde dakhelling	α	14,3	°		
sneeuwbelastingvormcoëfficiënt	$\mu_1(\alpha_1)$	0,80	s_1 =	1,28	kN/m^2
sneeuwbelastingvormcoëfficiënt	$\mu_1(\alpha_2)$	0,80	s_1 =	1,28	kN/m^2
sneeuwbelastingvormcoëfficiënt	$\mu_2(\alpha)$	1,18	s_2 =	1,89	kN/m^2

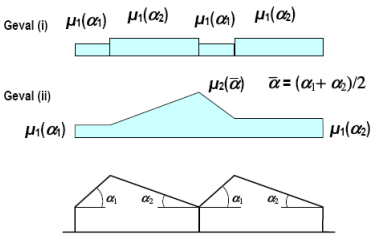

Daken met meer dan één overspanning *NEN-EN 1991-1-3 art. 5.3.4*

dakhelling	α_1	23	°		
dakhelling	α_2	23	°		
gemiddelde dakhelling	α	23	°		
sneeuwbelastingvormcoëfficiënt	$\mu_1(\alpha_1)$	0,80	s_1 =	1,28	kN/m^2
sneeuwbelastingvormcoëfficiënt	$\mu_1(\alpha_2)$	0,80	s_1 =	1,28	kN/m^2
sneeuwbelastingvormcoëfficiënt	$\mu_2(\alpha)$	1,41	s_2 =	2,26	kN/m^2

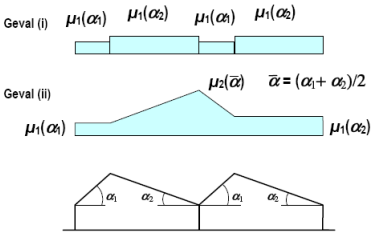

Er ontstaat dubbele sneeuwophoping door de trechtervorm van de overkapping.

S_{k1}= 1,28 kN/m^2	op h=-7,215m in 3d model	h_{sneeuw}= 1,28/2=0,64m
S_{k2}= 1,89 kN/m^2	op h=-5,940m " "	h_{sneeuw}= 1,89/2=0,95m
S_{k3}= 1,89+2,26 – 1,28 = 2,57 kN/m^2	op h=-4,665m " "	h_{sneeuw}= 2,57/2=1,285m

In Duitsland zijn de sneeuwbelastingcoëfficienten voor uitzonderlijke sneeuwverstuiving van toepassing (bijlage B, NEN-EN 1991-1-13 en DIN-EN 1991-1-3).

$\mu_1 = (2 \times 1{,}275_h) / 1{,}60_{sk} = 1{,}60$ ← maatgevend $h_{sneeuw} = 1{,}60 \times 1{,}60/2 = 1{,}28$m
$\mu_1 = (2 \times 9_{b3}) /(3_{l1}+3_{l2}) = \ = 3$
$\mu_1 = 5$
De sneeuwverstuiving is niet maatgevend t.o.v. de eerder beschouwde sneeuwophoping.

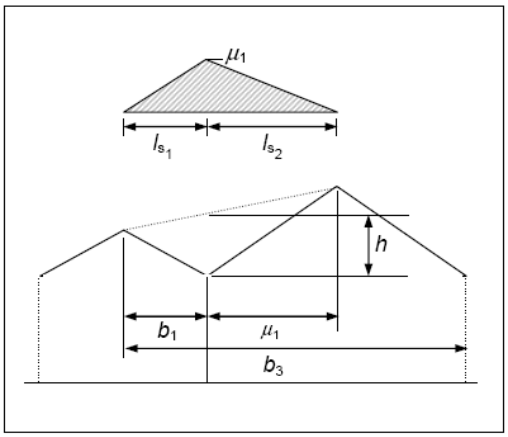

Figuur 7: Sneeuwverstuiving, bijlage B EN 1991-1-3

Dit resulteert in de volgende belastinginvoer:

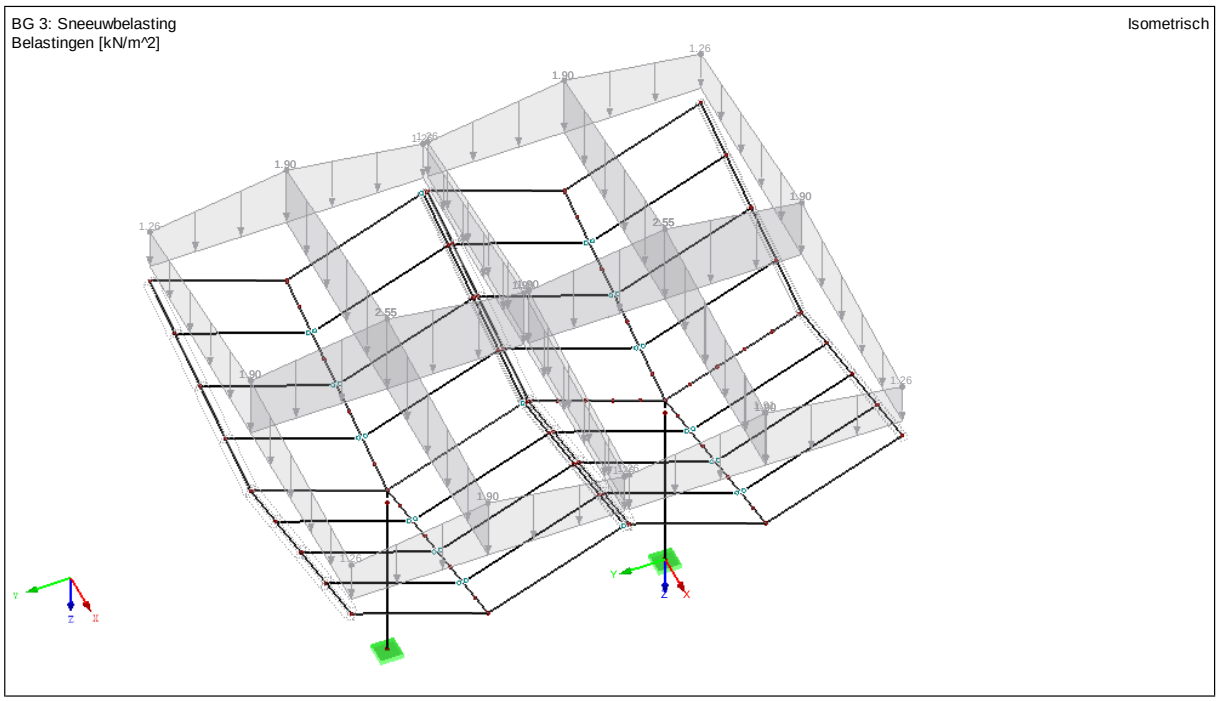

Figuur 8: Invoer sneeuwbelasting

3.2.4 BG4 t/m BG11 Windbelasting

Nederland:

Het gebouw is dusdanig ontworpen, dat het kan worden geplaatst in windgebied II en III, onbebouwd. De enige plek waar het bouwwerk niet kan komen te staan, is in kustgebieden en in windgebied I. Voor deze gebieden dient een aanvullende toets plaats te vinden en mogelijk een aanvullende berekening.

Voor rechthoekige gebouwen met een gelijkmatige vorm kan de windbelasting bepaald worden volgens NEN-EN 1991-1-4. Voor de bebouwing leidt dit tot de volgende gegevens:

windgebied		gebied II	
terreincategorie		II: onbebouwd	
gebouwhoogte	h	7,2	m
gebouwbreedte	b	10,0	m
gebouwdiepte	d	10,0	m
gebouwhoogte	z	7,2	m
windrichtingsfactor	c_{dir}	1,00	
seizoensfactor	c_{season}	1,00	
kar. gem. windsnelheid	$v_{b,0}$	27,5	m/s
vormparameter variatiecoëffic	K	0,23	
exponent	n	0,50	
jaarlijkse overschrijdingskans	p	0,02	
waarschijnlijkheidsfactor	c_{prob}	1,00	
basiswindsnelheid	v_b	27,5	m/s
ruwheidslengte	z_0	0,2	m
minimale hoogte	z_{min}	4,0	m
factor	$z_{0,II}$	0,05	m
maximale hoogte	z_{max}	200	m
terreinfactor	k_r	0,21	
ruwheidsfactor	$c_r(z)$	0,75	
orologiefactor	$c_o(z)$	1,00	
gemiddelde windsnelheid	$v_m(z)$	20,6	m/s
turbulentiefactor	k_L	1,0	
standaardafwijking	σ_v	5,76	m/s
turbulentie-intensiteit	$I_v(z)$	0,28	
luchtdichtheid	ρ	1,25	kg/m^3
basisstuwdruk	q_b	0,47	kN/m^2
blootstellingfactor	$c_e(z)$	1,66	
verplaatsingshoogte	h_{dis}	0,0	m

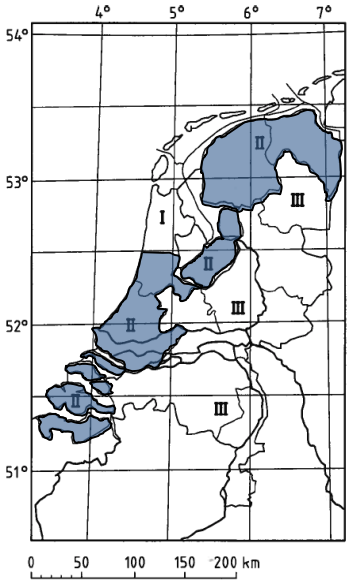

extreme stuwdruk	**$q_p(z)$**	**0,79 kN/m^2**

In het bovenstaande is de basiswindsnelheid verhoogd van v_b= 27,0 m/s naar v_b= 27,5 m/s. Zodoende kan het station ook worden toegepast in windgebied 3 in Duitsland.

Er wordt gerekend met een stuwdruk van $q_p(z)$ = 0,79 kN/m^2.

Duitsland:

In Duitsland gelden de onderstaande windbelastingen volgens de DIN-EN 1991-1-4. De basiswindsnelheid wordt genomen op v_b= 27,5 m/s. Dit houdt in dat dit rapport geldig is voor windzones 1,2 en 3. Er wordt terreincategorie Geländekategorie II aangehouden. Voor Gekändekategorie I dient een aanvullende beschouwing te worden gemaakt.

B2: Deutschland

Windzone	$v_{b,0}$	$q_{b,0}$
WZ 1	22,5 m/s	0,32 kN/m²
WZ 2	25,0 m/s	0,39 kN/m²
WZ 3	27,5 m/s	0,47 kN/m²
WZ 4	30,0 m/s	0,56 kN/m²

Bild NA.A.1 — Windzonenkarte für das Gebiet der Bundesrepublik Deutschland

Figuur 9: Windzones Duitsland

Tabelle NA.B.1 — Geländekategorien

Geländekategorie I Offene See; Seen mit mindestens 5 km freier Fläche in Windrichtung; glattes, flaches Land ohne Hindernisse Rauigkeitslänge $z_0 = 0{,}01$ m Profilexponent $\alpha = 0{,}12$	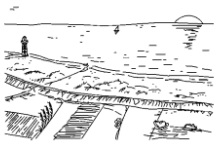
Geländekategorie II Gelände mit Hecken, einzelnen Gehöften, Häusern oder Bäumen, z. B. landwirtschaftliches Gebiet Rauigkeitslänge $z_0 = 0{,}05$ m Profilexponent $\alpha = 0{,}16$	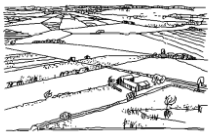
Geländekategorie III Vorstädte, Industrie- oder Gewerbegebiete; Wälder Rauigkeitslänge $z_0 = 0{,}30$ m Profilexponent $\alpha = 0{,}22$	
Geländekategorie IV Stadtgebiete, bei denen mindestens 15 % der Fläche mit Gebäuden bebaut sind, deren mittlere Höhe 15 m überschreitet Rauigkeitslänge $z_0 = 1{,}05$ m Profilexponent $\alpha = 0{,}30$	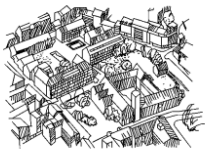

Figuur 10: Terreincategorieën Duitsland

Belasting op 3d model:

#Op- en neerwaartse windbelasting op overkapping:

Dakvormfactoren

		φ=0 (leeg)	φ=1 (dicht)
	$c_{f,neer}$	$c_{f,opw}$	$c_{f,opw}$
α=15°	0,4	-0,8	-1,3
α=25°	0,7	-1	-1,3
α=-15°	0,5	-0,6	**-1,4**
α=-20°	**0,7**	-0,7	-1,3

Er wordt gerekend met de maximale vormfactoren:
c_f=+0,70 (neerwaarts) en c_f= -1,40 (opwaarts)

Dit resulteert in de volgende windbelastingen:
$q_{wind,opw}$= 0,79 x 1,40 = 1,11 kN/m^2
$q_{wind,neer}$ = 0,79 x 0,70 = 0,55 kN/m^2

Wind aangeblazen vlak:
Op staalprofielen:
q_{wind}=0,300$_h$ x 0,79 x 2 = 0,47 kN/m^1

Op houten kolom:
$q_{wind,onder,1}$= 0,960$_h$ x 0,79 x 2 = 1,52 kN/m^1
$q_{wind,bov,1}$= 0,760$_h$ x 0,79 x 2 = 1,2 kN/m^1
$q_{wind,onder,2}$= 0,960$_h$ x 0,79 x 2 = 1,52 kN/m^1
$q_{wind,bov,2}$= 0,760$_h$ x 0,79 x 2 = 1,2 kN/m^1

Windwrijving:
c_{fr}= 0,04 (onderzijde)
c_{fr}= 0,02 (bovenzijde)
$c_{fr,tot}$= 0,06
$q_{wind,wr}$= 0,79 x 0,06 = 0,047 kN/m^2

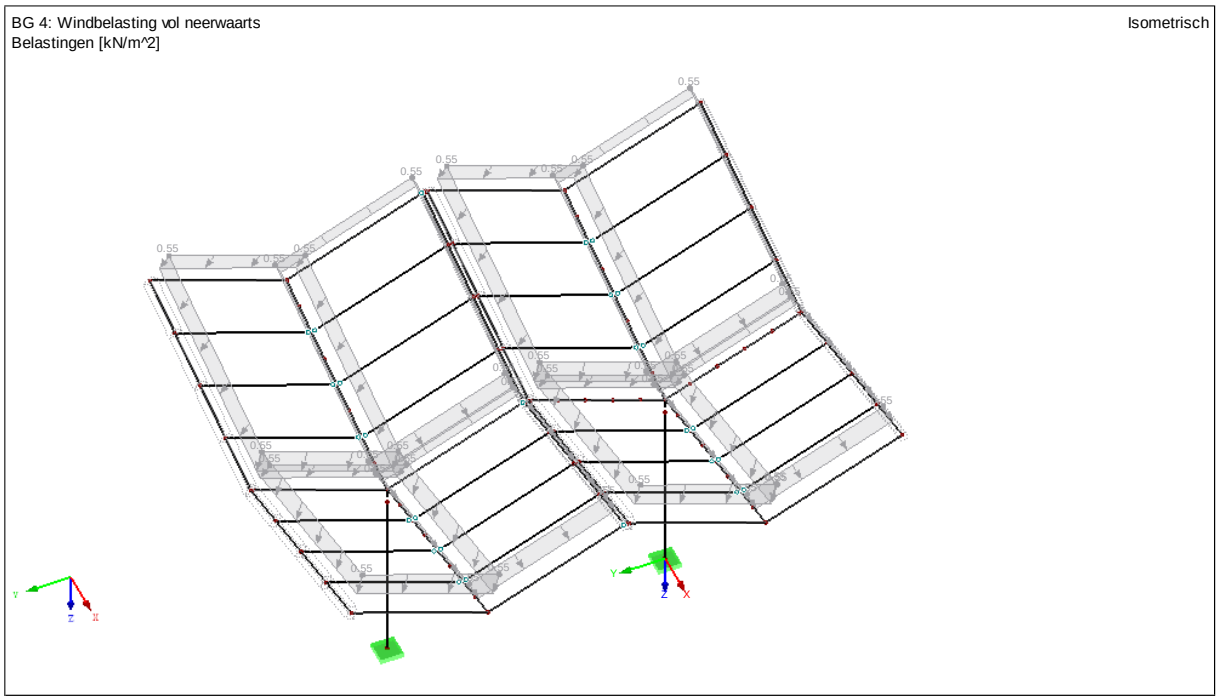

Figuur 11: Invoer BG4 windbelasting vol neerwaarts

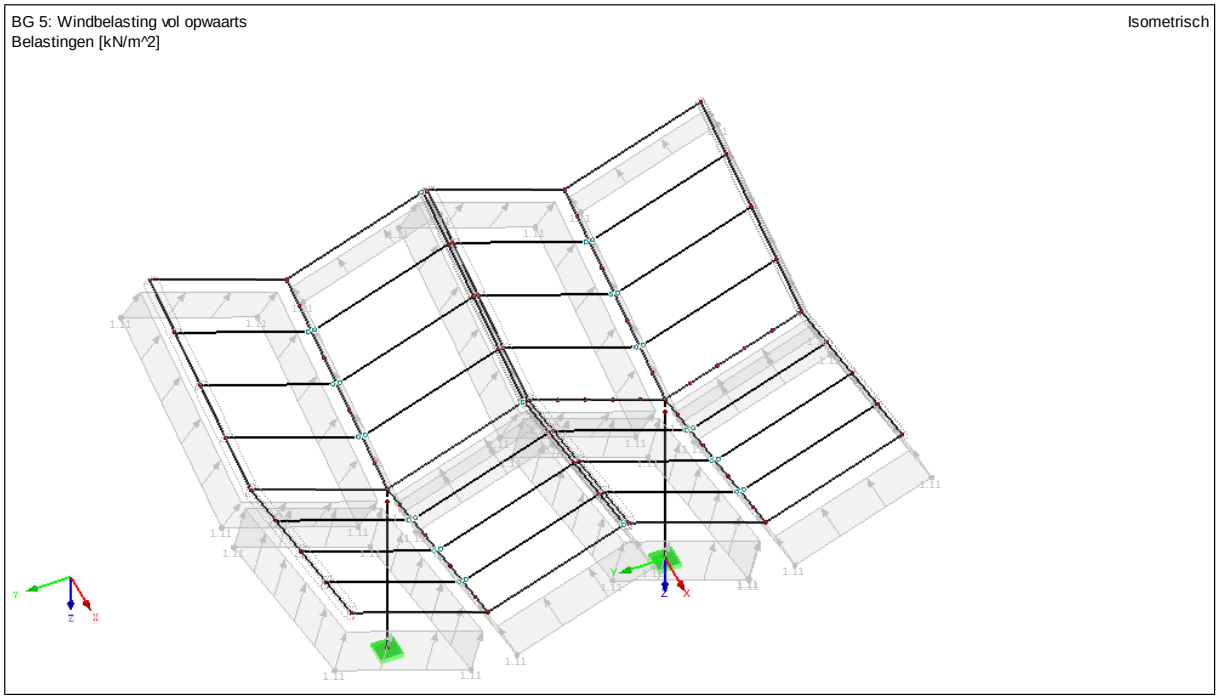

Figuur 12: Invoer BG5 windbelasting vol opwaarts

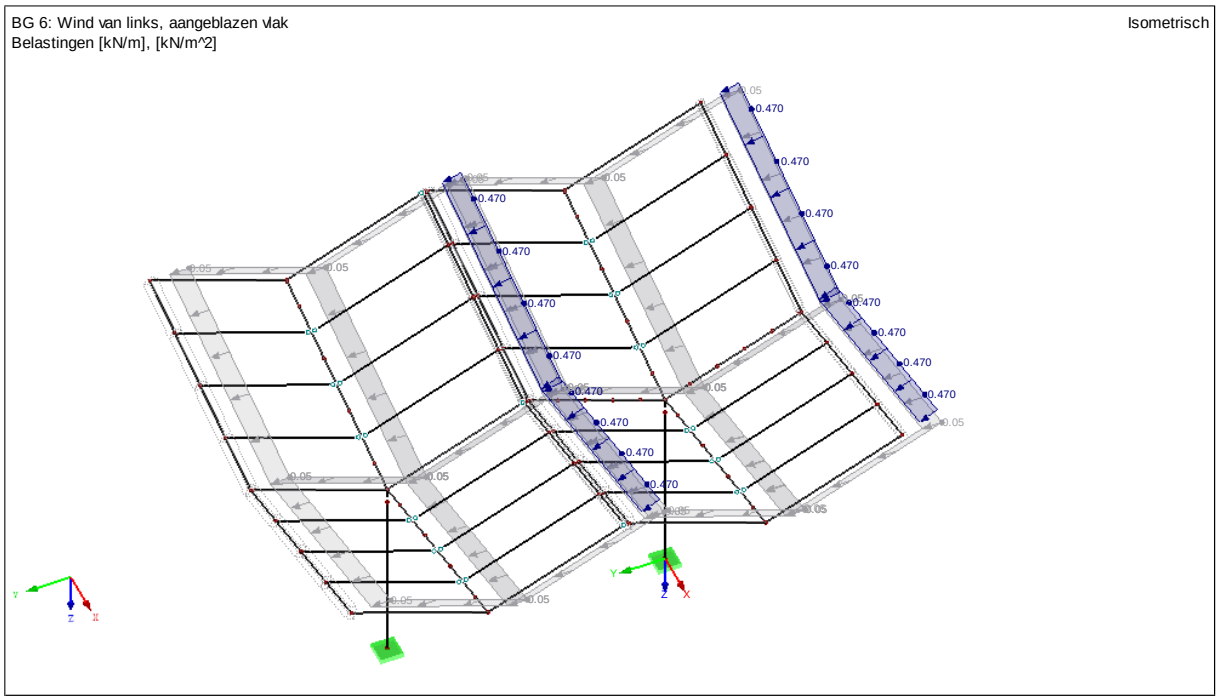

Figuur 13: Invoer BG6 wind van zijkant

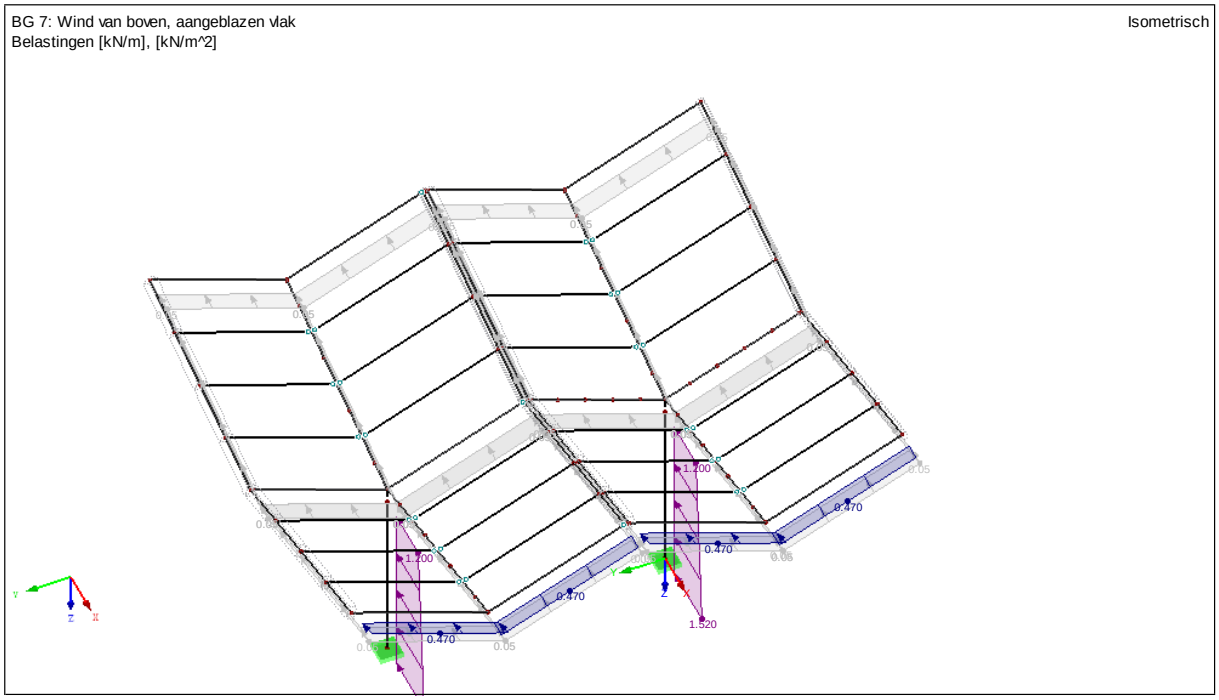

Figuur 14: Invoer BG7 wind van voren

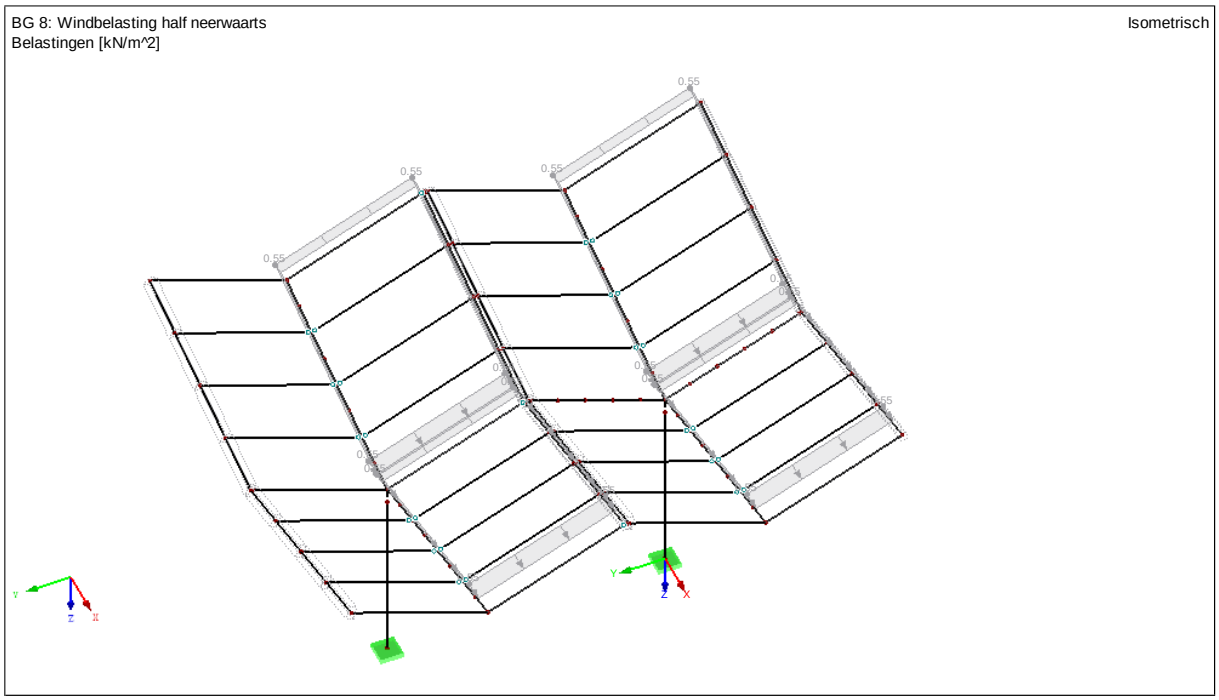

Figuur 15: Invoer BG8 wind neerwaarts half

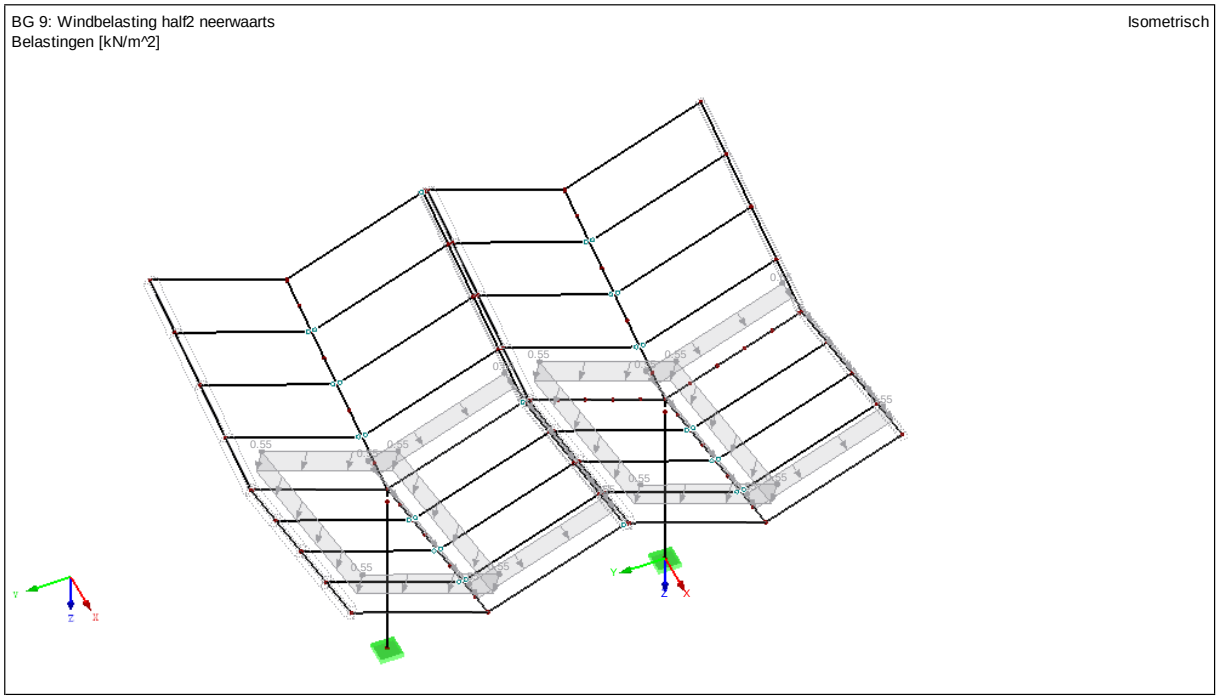

Figuur 16: Invoer BG9 wind neerwaarts half

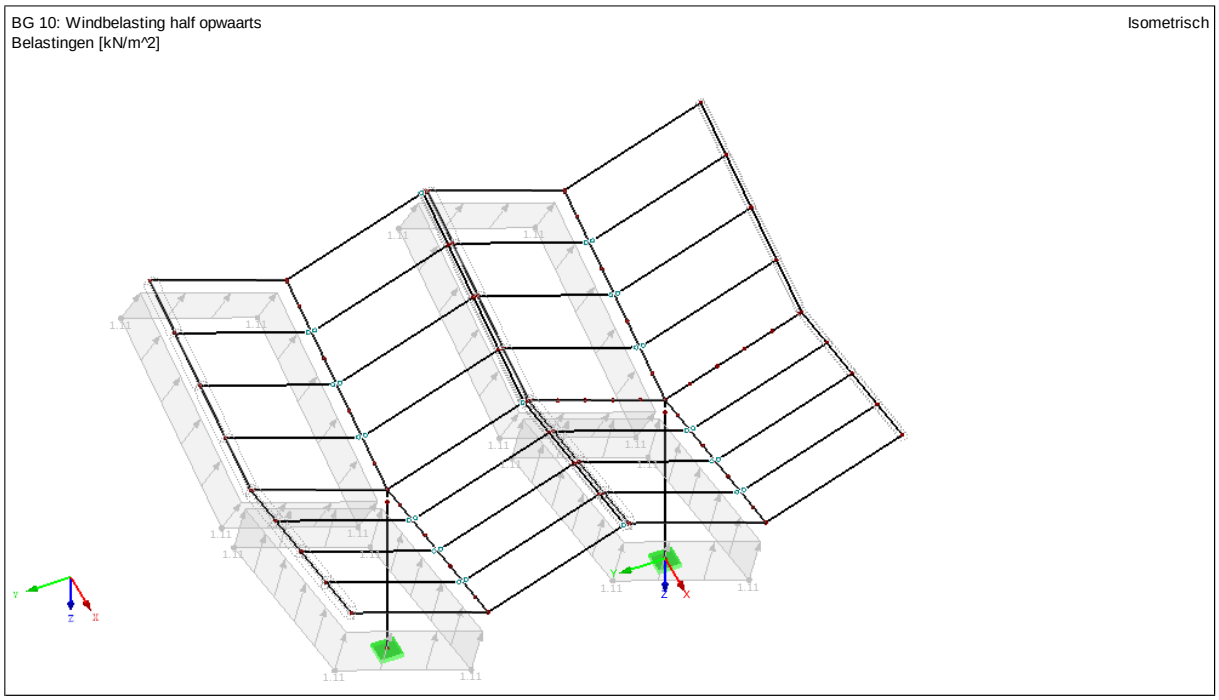

Figuur 17: Invoer BG10 wind opwaarts half

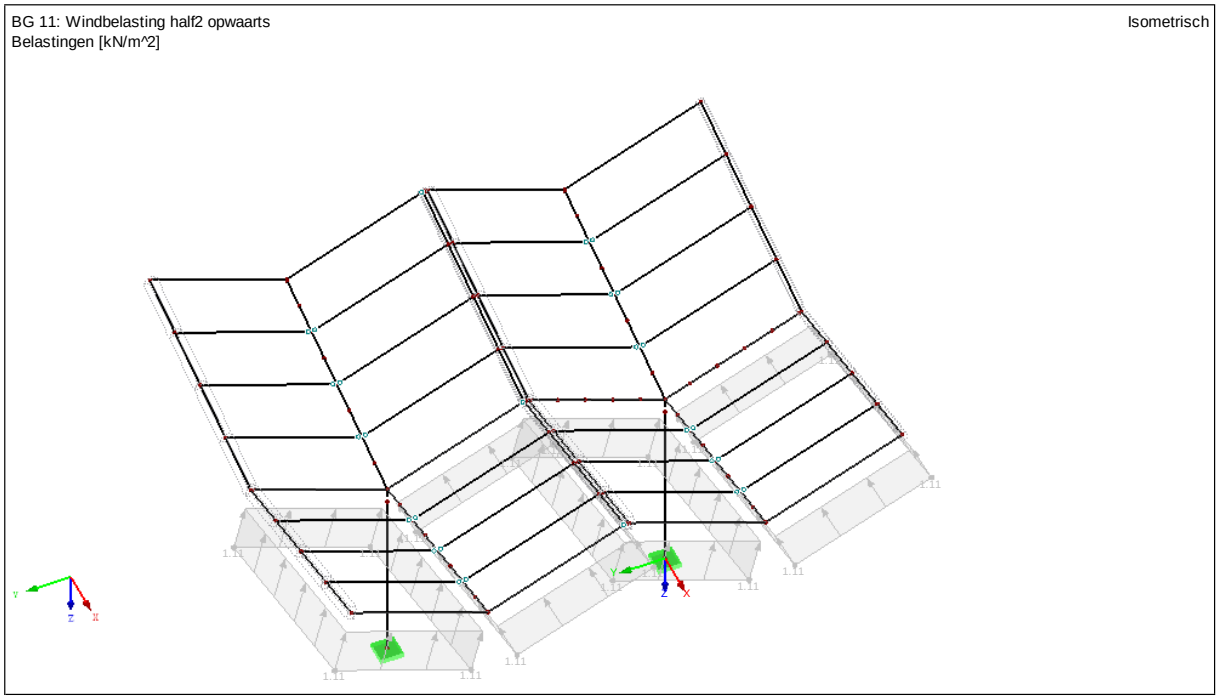

Figuur 18: Invoer BG11 wind opwaarts half

3.2.5 BG12: Opgelegde dakbelastingen

Onderstaande tabel geeft een samenvatting van de karakteristieke waarden van de opgelegde belastingen (veranderlijke belastingen). Het gestelde in NEN-EN 1991-1-1 blijft onverkort van kracht.

Klasse van belaste oppervlakte	**opgelegde belastingen**	
	q_k [kN/m^2]	**Q_k [kN]**
Klasse H (daken)		
dak (niet toegankelijk)	afh. van dakhelling[a]	1,5[b]
regenwaterbelasting	1,0	-
sneeuwbelasting	0,56	-
windbelasting: zie paragraaf windbelasting	-	-

[a] Zie tabel NB.4-6.10 NEN-EN 1991-1-1.
[b] Werkend op een oppervlakte van 0,1 m x 0,1 m.

Gezien de grote sneeuwbelasting zal de vlaklast van q_k= 1,0 kN/m^2 niet maatgevend zijn. De puntlast van F_k=1,5 kN wordt wel gemodelleerd.

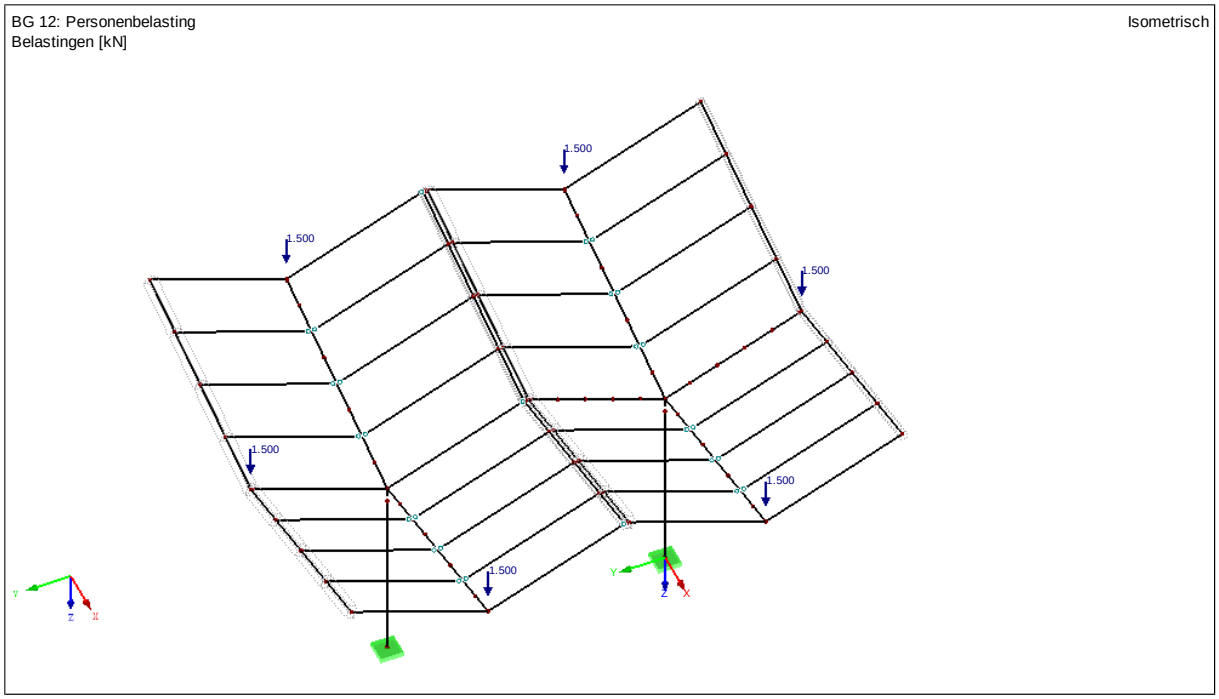

Figuur 19: Invoer BG12 personenbelasting

3.2.6 Waterbelasting

Er komt een noodoverloop in het midden van de luifel. Er is verder niet gerekend met wateraccumulatie.

3.2.7 Temperatuurbelasting

De luifel kan naar alle zijden vrij uitzetten onder temperatuurbelasting. De temperatuurbelasting is verder niet meegenomen in deze berekening.

3.3 Overzicht Ψ-factoren en belastingcombinaties

Onderstaande psi-factoren zijn van toepassing in Nederland en Duitsland.

Nederland:

In onderstaande tabel zijn de waarden van de Ψ-factoren voor gebouwen gegeven.

Belasting	Ψ_0	Ψ_1	Ψ_2
Categorie H: daken	0	0	0
Sneeuwbelasting	0	0,2	0
Windbelasting	0	0,2	0
Temperatuur (geen brand)	0	0,5	0

De psi-factoren die geldig zijn in Nederland zijn niet maatgevend t.o.v. de psi-factoren in Duitsland. Onderstaande wordt dan ook gehanteerd.

Duitsland:

Belasting	Ψ_0	Ψ_1	Ψ_2
Categorie H: daken	0	0	0
Sneeuwbelasting tot 1000m ü.d.M.	0,5	0,2	0
Windbelasting	0,6	0,2	0
Temperatuur (geen brand)	0,6	0,5	0

De combinatiefactor wordt verrekend met de veiligheidsfactor in de belastingcombinatie:

	ULS	SLS
Sneeuw maximaal → factor wind:	$1{,}50_\gamma$ x 0,60 = 0,90	$1{,}0_\gamma$ x 0,60 = 0,60
Wind maximaal → factor sneeuw:	$1{,}50_\gamma$ x 0,50 = 0,75	$1{,}0_\gamma$ x 0,50 = 0,50

BG		ULS	ULS mom.	SLS	SLS mom
1	eigen gewicht	1,35	-	1	
2	permanente belasting	1,35	-	1	
3	sneeuw vol met ophoping	1,5	0,9	1	0,6
4	wind neerwaarts vol	1,5	0,75	1	0,5
5	wind opwaarts vol	1,5	0,75	1	0,5
6	wind van links	1,5	0,75	1	0,5
7	wind van boven	1,5	0,75	1	0,5
8	wind neer half	1,5	0,75	1	0,5
9	wind neer half 2	1,5	0,75	1	0,5
10	wind op half	1,5	0,75	1	0,5
11	wind op half 2	1,5	0,75	1	0,5
12	personen	1,5	0	1	0

Belasting	Belastingscombinatie			BG.1		BG.2		BG.3		BG.4		BG.5		BG.6		
Combin.	OS	Omschrijving	Te berekenen	Factor	No.	Factor	No.	Factor	No.	Factor	No.	Factor	No.	Factor	No.	Commentaar
BC1	0	PB+sneeuw	+	1,350	BG1	1,350	BG2	1,500	BG3							PB+sneeuw
BC2	0	max. wind neer + wi li + (sneeuw)mom	+	1,350	BG1	1,350	BG2	0,900	BG3	1,5	BG4	1,5	BG6			max. wind neer + wi li + (sneeuw)mom
BC3	0	max.wind neer + wi bov + (sneeuw) mom	+	1,350	BG1	1,350	BG2	0,900	BG3	1,5	BG4	1,5	BG7			max.wind neer + wi bov + (sneeuw) mom
BC4	0	max.wind neer half + wi li + (sneeuw)mom	+	1,350	BG1	1,350	BG2	0,900	BG3	1,5	BG8	1,5	BG6			max.wind neer half + wi li + (sneeuw)mom
BC5	0	max.wind neer half + wi bov + (sneeuw)mom	+	1,350	BG1	1,350	BG2	0,900	BG3	1,5	BG8	1,5	BG7			max.wind neer half + wi bov + (sneeuw)mom
BC6	0	max.wind neer half 2 + wi li + (sneeuw)mom	+	1,350	BG1	1,350	BG2	0,900	BG3	1,5	BG9	1,5	BG6			max.wind neer half 2 + wi li + (sneeuw)mom
BC7	0	max.wind neer half 2 + wi bov + (sneeuw)mom	+	1,350	BG1	1,350	BG2	0,900	BG3	1,5	BG9	1,5	BG7			max.wind neer half 2 + wi bov + (sneeuw)mom
BC8	0	max. sneeuw + (wind neer + wi li)mom	+	1,350	BG1	1,350	BG2	1,500	BG3	0,75	BG4	0,75	BG6			max. sneeuw + (wind neer + wi li)mom
BC9	0	max.sneeuw + (wind neer + wi bov) mom	+	1,350	BG1	1,350	BG2	1,500	BG3	0,75	BG4	0,75	BG7			max.sneeuw + (wind neer + wi bov) mom
BC10	0	max.sneeuw + (wind neer half + wi li)mom	+	1,350	BG1	1,350	BG2	1,500	BG3	0,75	BG8	0,75	BG6			max.sneeuw + (wind neer half + wi li)mom
BC11	0	max.sneeuw + (wind neer half + wi bov)mom	+	1,350	BG1	1,350	BG2	1,500	BG3	0,75	BG8	0,75	BG7			max.sneeuw + (wind neer half + wi bov)mom
BC12	0	max.sneeuw+(wind neer half 2+wi li)mom	+	1,350	BG1	1,350	BG2	1,500	BG3	0,75	BG9	0,75	BG6			max.sneeuw+(wind neer half 2+wi li)mom
BC13	0	max.sneeuw+(wind neer half 2 + wi bov)mom	+	1,350	BG1	1,350	BG2	1,500	BG3	0,75	BG9	0,75	BG7			max.sneeuw+(wind neer half 2 + wi bov)mom
BC14	0	max.wind opw + wi li	+	0,900	BG1	0,900	BG2	1,500	BG5	1,5	BG6					max.wind opw + wi li
BC15	0	max.wind opw + wi bov	+	0,900	BG1	0,900	BG2	1,500	BG5	1,5	BG7					max.wind opw + wi bov
BC16	0	wind neer half + wi li	+	1,350	BG1	1,350	BG2	1,5	BG8	1,5	BG6					wind neer half + wi li
BC17	0	wind neer half + wi bov	+	1,350	BG1	1,350	BG2	1,5	BG8	1,5	BG7					wind neer half + wi bov
BC18	0	wind neer half 2 + wi li	+	1,350	BG1	1,350	BG2	1,5	BG9	1,5	BG6					wind neer half 2 + wi li
BC19	0	wind neer half 2 + wi bov	+	1,350	BG1	1,350	BG2	1,5	BG9	1,5	BG7					wind neer half 2 + wi bov
BC20	0	max.wind opw half + wi li	+	0,900	BG1	0,900	BG2	1,500	BG10	1,5	BG6					max.wind opw half + wi li
BC21	0	max.wind opw half + wi bov	+	0,900	BG1	0,900	BG2	1,500	BG10	1,5	BG7					max.wind opw half + wi bov
BC22	0	max.wind opw half 2 + wi li	+	0,900	BG1	0,900	BG2	1,5	BG11	1,5	BG6					max.wind opw half 2 + wi li
BC23	0	max.wind opw half 2 + wi bov	+	0,900	BG1	0,900	BG2	1,5	BG11	1,5	BG7					max.wind opw half 2 + wi bov
BC24	0	personen	+	1,350	BG1	1,350	BG2	1,500	BG12							personen
BC25	0	PB+sneeuw	+	1,000	BG1	1,000	BG2	1,000	BG3							PB+sneeuw
BC26	0	max. wind neer + wi li + (sneeuw)mom	+	1,000	BG1	1,000	BG2	0,600	BG3	1	BG4	1	BG6			max. wind neer + wi li + (sneeuw)mom
BC27	0	max.wind neer + wi bov + (sneeuw) mom	+	1,000	BG1	1,000	BG2	0,600	BG3	1	BG4	1	BG7			max.wind neer + wi bov + (sneeuw) mom
BC28	0	max.wind neer half + wi li + (sneeuw)mom	+	1,000	BG1	1,000	BG2	0,600	BG3	1	BG8	1	BG6			max.wind neer half + wi li + (sneeuw)mom
BC29	0	max.wind neer half + wi bov + (sneeuw)mom	+	1,000	BG1	1,000	BG2	0,600	BG3	1	BG8	1	BG7			max.wind neer half + wi bov + (sneeuw)mom
BC30	0	max.wind neer half 2 + wi li + (sneeuw)mom	+	1,000	BG1	1,000	BG2	0,600	BG3	1	BG9	1	BG6			max.wind neer half 2 + wi li + (sneeuw)mom
BC31	0	max.wind neer half 2 + wi bov + (sneeuw)mom	+	1,000	BG1	1,000	BG2	0,600	BG3	1	BG9	1	BG7			max.wind neer half 2 + wi bov + (sneeuw)mom
BC32	0	max. sneeuw + (wind neer + wi li)mom	+	1,000	BG1	1,000	BG2	1,000	BG3	0,5	BG4	0,5	BG6			max. sneeuw + (wind neer + wi li)mom
BC33	0	max.sneeuw + (wind neer + wi bov) mom	+	1,000	BG1	1,000	BG2	1,000	BG3	0,5	BG4	0,5	BG7			max.sneeuw + (wind neer + wi bov) mom
BC34	0	max.sneeuw + (wind neer half + wi li)mom	+	1,000	BG1	1,000	BG2	1,000	BG3	0,5	BG8	0,5	BG6			max.sneeuw + (wind neer half + wi li)mom
BC35	0	max.sneeuw + (wind neer half + wi bov)mom	+	1,000	BG1	1,000	BG2	1,000	BG3	0,5	BG8	0,5	BG7			max.sneeuw + (wind neer half + wi bov)mom
BC36	0	max.sneeuw+(wind neer half 2+wi li)mom	+	1,000	BG1	1,000	BG2	1,000	BG3	0,5	BG9	0,5	BG6			max.sneeuw+(wind neer half 2+wi li)mom
BC37	0	max.sneeuw+(wind neer half 2 + wi bov)mom	+	1,000	BG1	1,000	BG2	1,000	BG3	0,5	BG9	0,5	BG7			max.sneeuw+(wind neer half 2 + wi bov)mom
BC38	0	max.wind opw + wi li	+	1,000	BG1	1,000	BG2	1,000	BG5	1	BG6					max.wind opw + wi li
BC39	0	max.wind opw + wi bov	+	1,000	BG1	1,000	BG2	1,000	BG5	1	BG7					max.wind opw + wi bov
BC40	0	wind neer half + wi li	+	1,000	BG1	1,000	BG2	1	BG8	1	BG6					wind neer half + wi li
BC41	0	wind neer half + wi bov	+	1,000	BG1	1,000	BG2	1	BG8	1	BG7					wind neer half + wi bov
BC42	0	wind neer half 2 + wi li	+	1,000	BG1	1,000	BG2	1	BG9	1	BG6					wind neer half 2 + wi li
BC43	0	wind neer half 2 + wi bov	+	1,000	BG1	1,000	BG2	1	BG9	1	BG7					wind neer half 2 + wi bov
BC44	0	max.wind opw half + wi li	+	1,000	BG1	1,000	BG2	1,000	BG10	1	BG6					max.wind opw half + wi li
BC45	0	max.wind opw half + wi bov	+	1,000	BG1	1,000	BG2	1,000	BG10	1	BG7					max.wind opw half + wi bov
BC46	0	max.wind opw half 2 + wi li	+	1,000	BG1	1,000	BG2	1	BG11	1	BG6					max.wind opw half 2 + wi li
BC47	0	max.wind opw half 2 + wi bov	+	1,000	BG1	1,000	BG2	1	BG11	1	BG7					max.wind opw half 2 + wi bov
BC48	0	personen	+	1,000	BG1	1,000	BG2	1,000	BG12							personen

Figuur 20: Overzicht ingevoerde belastingcombinaties

Voor de omhullende combinatie worden de volgende belastingcombinaties vergeleken:

ULS:	belastingcombinaties 1 t/m 24
SLS:	belastingcombinaties 25 t/m 48
SLS inclusief kruip:	SLS omhullend + $0{,}80_{kdef}$ x (BG1+BG2)

4 Resultaten

In dit hoofdstuk worden de resultaten besproken en de verschillende staven gecontroleerd.

4.1 Vervormingen

Voor de algehele vervormingen wordt gekeken naar de omhullende combinatie: SLS incl. kruip.

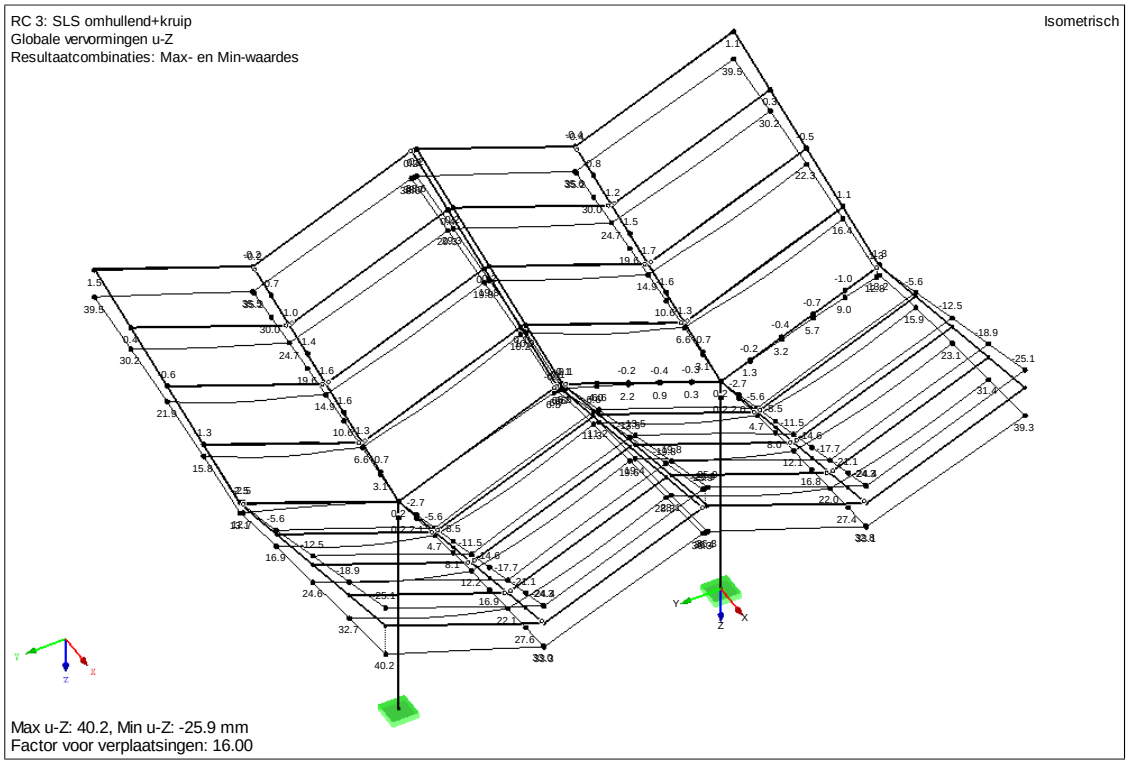

Figuur 21: Overzicht vervormingen SLS inclusief kruip

Toetsing diagonaal:	u_{op} = 40,2mm < u_{toe}=6364/125 = 50,9mm
Toetsing overstek korte richting:	u_{op} = 13,1mm < u_{toe}=3260/125 = 26,1mm
Toetsing overstek lange richting:	u_{op} = 35,2mm < u_{toe}=5160/125 = 41,3mm

Bovenstaande vervormingen dienen te kunnen worden opgenomen door de zonnepanelen en de bijbehorende detaillering. Beoordeling door leverancier zonnepanelen.

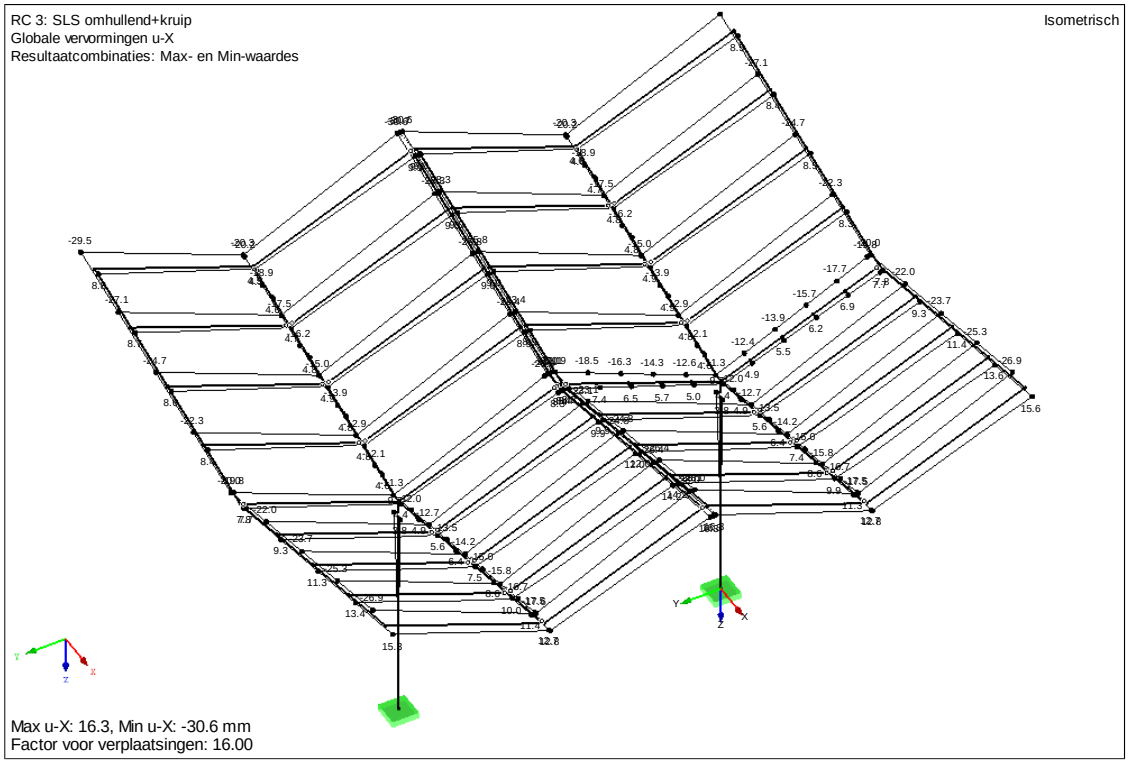

Figuur 22: Overzicht zijdelingse vervorming x-richting

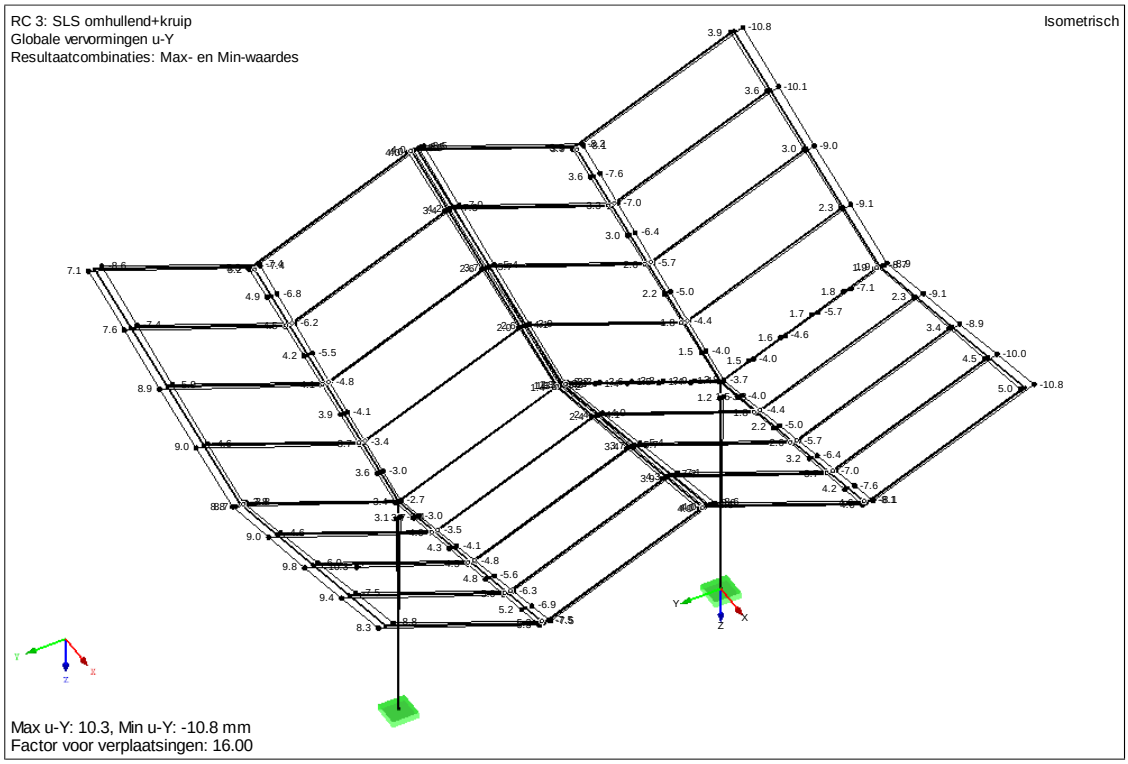

Figuur 23: Overzicht zijdelingse vervorming y-richting

Toetsing bij kolom: $u_{hor,op} = \sqrt{9{,}7^2+3{,}3^2} = 10{,}2\text{mm} < u_{hor,toe} = 4300/150 = 28{,}67\text{mm}$

Toetsing hoogste punt: $u_{hor,op} = \sqrt{30{,}6^2+10{,}8^2} = 32{,}5\text{mm} < u_{hor,toe} = 7200/150 = 48\text{mm}$

4.2 Toetsing houten onderdelen

4.2.1 Overzicht krachten

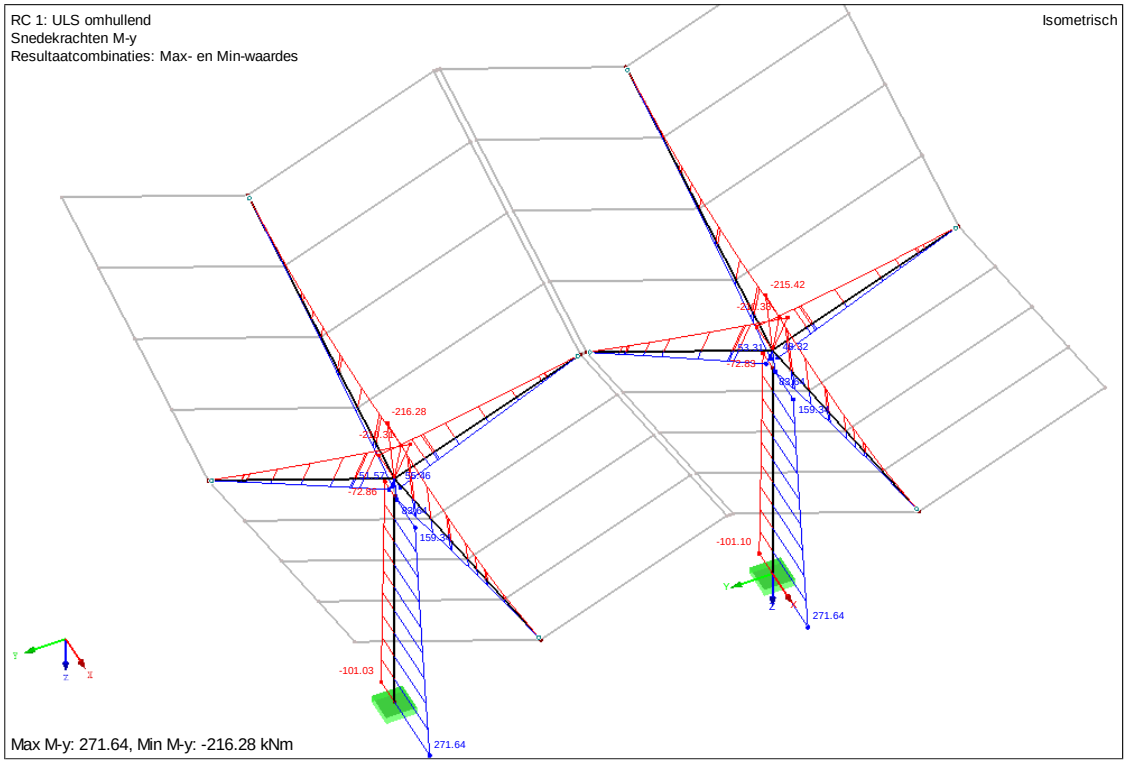

Figuur 24: Momenten M_y in ULS

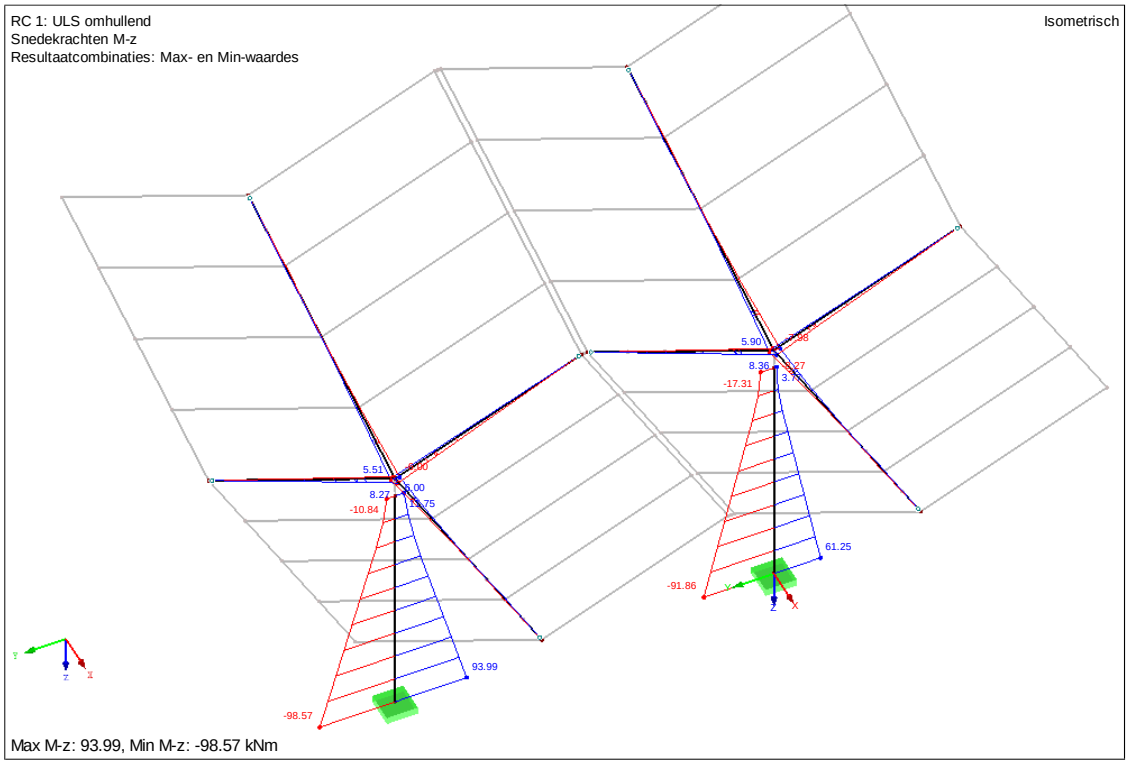

Figuur 25: Momenten M_z in ULS

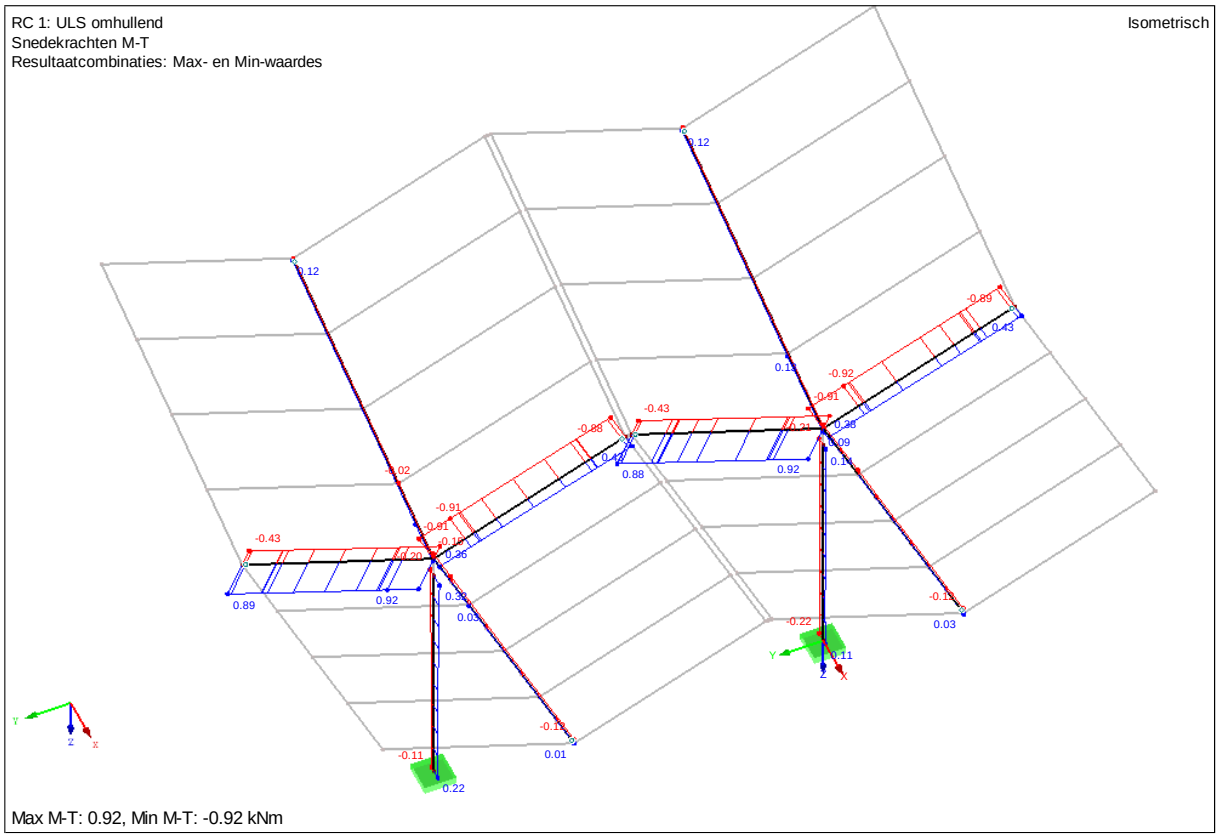

Figuur 26: Momenten M_{tor} in ULS

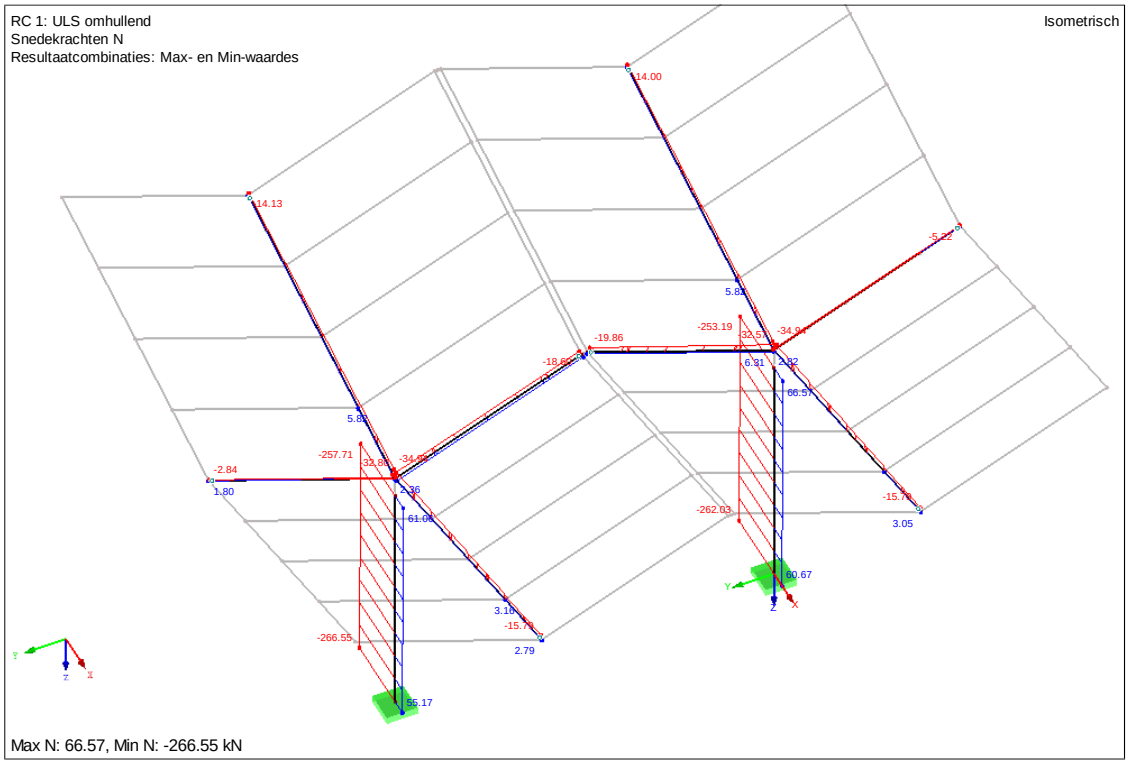

Figuur 27: Normaalkrachtenlijn in ULS

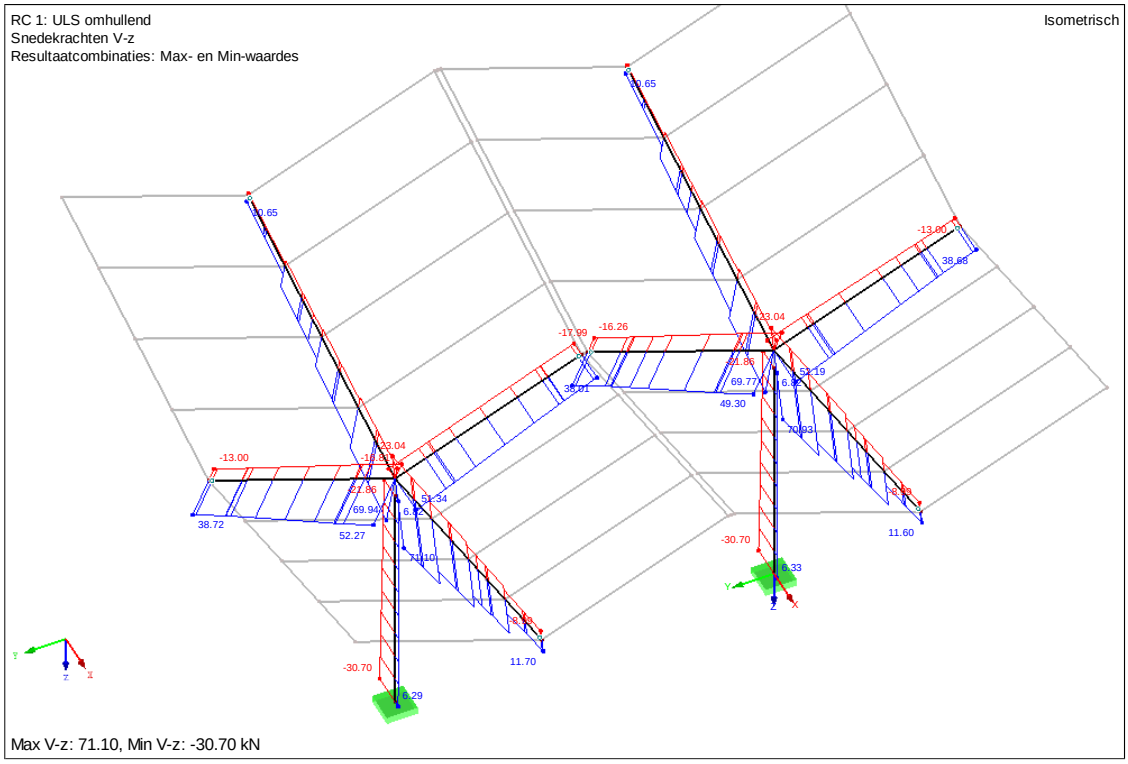

Figuur 28: Dwarskrachtenlijn V_z in ULS

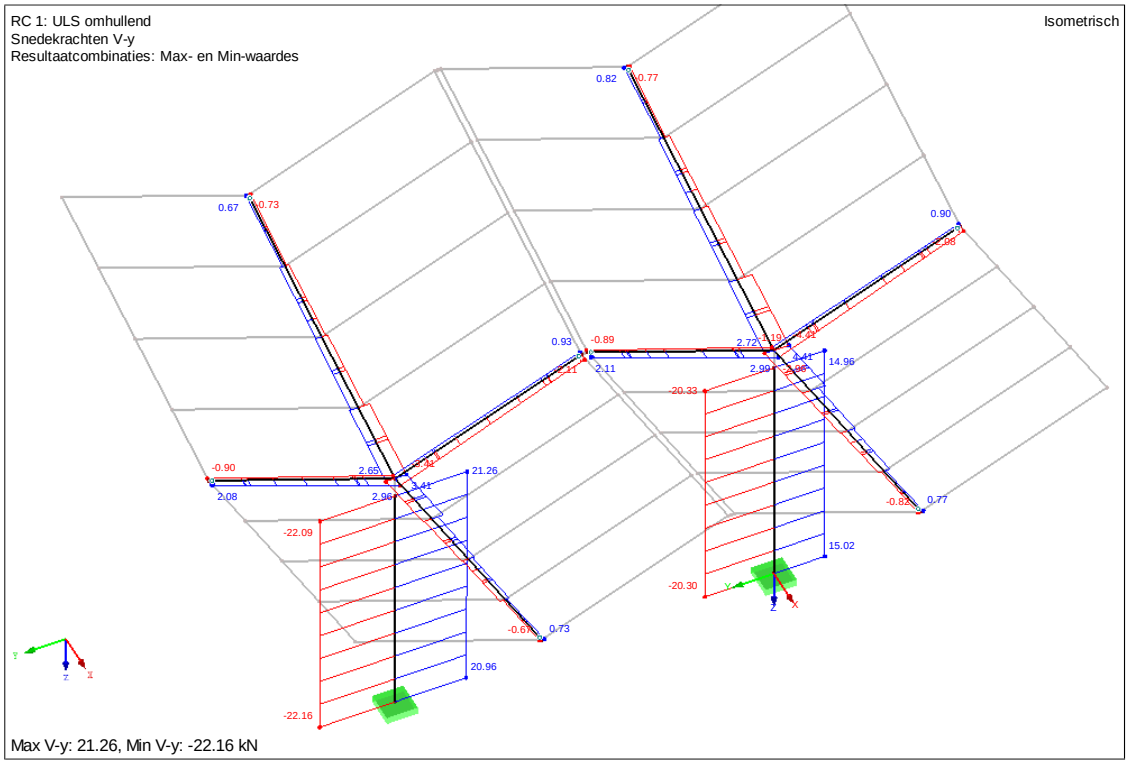

Figuur 29: Dwarskrachten V_y in ULS

4.2.2 Dakliggers gebogen

Dimensies: 200x $730_{onder}/320_{boven}$ mm

Onderin (h=730mm)	Bovenin (h=320mm):
M_{dy}= -216 kNm/+84 kNm	M_{dy}= 0
$M_{d,z}$= 5,5 kNm	M_{dz}= 0
V_d= 71/-23 kN	V_d= 12/-9 kN
N_d= -35 kN/+6 kN	N_d= -20 kN/+6 kN

k_{cr}= 2,5/3,50 = 0,71

σ_{vd}= 1,5 x 66 x10^3 / (0,71$_{kcr}$ x 200x730) = 0,96 N/mm^2 < f_{vd}= 3,50 x 0,90/1,25 =2,52 N/mm^2

α = 0° bij gebogen liggers

Controle boogspant NEN-EN 1995 (art. 6.4.3)								V1.1	
b :	200	mm		Hout kw:	GL 28h				
h_{opleg} :	320	mm		Klim.kl :	2				
h_{ap} :	730	mm		γ_m :	1,3	fac. (kort)			
$M_{ap,d}$:	216	kNm		k_{mod} :	0,9	fac. (kort)			
t :	40	mm		$f_{v,d}$:	1,73	N/mm^2			
r_{in}	10450	mm		$f_{m,d}$:	19,38	N/mm^2			
r :	10815	mm		k_{mod} :	0,8	fac. f_{t90}			
alpha :	0	°		$f_{t,90,d}$:	0,31	N/mm^2	UC = 0,78		
Controle buigspanningen:									
k_l :	1,026	fac		k_p :	0,017	fac			
k_1 :	1,000	fac		k_5 :	0,000	fac			
k_2 :	0,350	fac		k_6 :	0,250	fac			
k_3 :	0,600	fac		k_7 :	0,000	fac			
k_4 :	0,000	fac		k_r :	1	fac			
$\sigma_{m,d}$ =	12,48	N/mm^2	<	k_l x f_{md} =	19,38	N/mm^2	UC = 0,64		(6.41)
Controle trekspanningen loodrecht op de vezelrichting:									
k_{dis} :	1,4	fac boog		k_p :	0,017	fac			
k_{vol} :	0,425	fac.		V =	0,722	mm^2			
l_{tot} boog :	10320	mm							
$\sigma_{t,90d}$ =	0,03	N/mm^2	<	k_{dis} x k_{vol} x f_{t90d} =	0,18	N/mm^2	UC = 0,19		(6.50)
Controle trekspanningen loodrecht op de vezelrichting + afschuiving									
V_d :	71	kN		k_{cr} :	0,71	(in Duitsland)			
τ_d :	1,02	N/mm^2							
aandeel afschuiving:				*aandeel trek ⊥ vezelrichting:*					
	0,59		+	0,19	<	1	UC = 0,78		(6.53)

DIN-EN 1995-1-1 NCI Zu 6.4.3. stelt dat: Indien de uitnutting van de trekspanningen loodrecht op de houtvezel groter zijn is η=0,80, dan wordt versterking van de doorsnede middels voldraadschroeven/platen aanbevolen. Gezien de UC< 0,80, hoeft deze versterking niet te worden aangebracht.

Om scheurvorming uit voorzorg te voorkomen, wordt aanbevolen enkele voldraadschroeven aan te brengen. Definitieve uitwerking/keuze aan de leverancier.

Controle knik met l_{buc}= 2x5,16=10,32m (=conservatief)
$h_{profiel}$= 2/3 x (760-320)+320 = 594mm

BEREKENING KOLOM OP 2 STEUNPUNTEN												V2.0
b (kolom):	200	mm		A	=	1188	cm^2		Hout kw:	GL 28h	keuze	
h (kolom):	594	mm		W_y	=	11761	cm^3		Gevolg Klasse :	CC2	keuze	
L_y :	10,32	m		I_y	=	3,49E+05	cm^4		Klim.kl :	2	keuze	
L_z :	5,16	m		k_h	=	1,00	fac		Belasting:	boven	keuze	
M_d :	216,00	kN		k_{mod}	=	0,90	fac		Steunen:	boven	keuze	
N_d :	32,00	kN										
Krachstwerking:									**$UC_{max,uls}$ =**	**0,93**		
Controle Uiterste grenstoestand: NEN 1995-1-1:2005+C1:2006												
10.6.b:druk+buiging:				$\sigma_{c;0;d}$	=	0,27	N/mm^2	<	$f_{c;0;u;d}$ =	20,16	N/mm^2	*UC : 0,01*
(kmod = 0,90)			art 6.3.2. vgl.6.23	$\sigma_{c;0;d}$ /(k_{cy} * $f_{c;o;d}$) + $\sigma_{m;y;d}/f_{m;y;d}$				=	0,27/(0,777*20,16)+18,37/20,16=			*UC : 0,93*
			art 6.3.2. vgl.6.24	$\sigma_{c;0;d}$ /(k_{cz} * $f_{c;o;d}$) + km * ($\sigma_{m;y;d}/f_{m;y;}$				=	0,27/(0,424*20,16)+(0,7*18,37)/20,16=			*UC : 0,67*
			art 6.3.3. vgl.6.33	(lef = 5832mm ; σm;crit = 94,57 N/mm2 ; λrel = 0,54 ; kcrit = 1,000)								
$M_{d(6.10.b)}$=	216,00	kNm		$\sigma_{m;d}$	=	18,37	N/mm^2	<	k_{crit} x $f_{m;d}$ =	20,16	N/mm^2	*UC : 0,91*
Nd =	32,00	kN	art 6.3.3. vgl.6.35	0,83 (buiging)				+	0,03 (druk)		=	*UC : 0,86*

4.2.3 Korte dakliggers

Dimensies: 200x $730_{onder}/320_{boven}$ mm

Onderin (h=730mm)
M_{dy}= -148 kNm/+59 kNm
M_{dz}= 8,3 kNm
V_d= 52 kN /-20 kN
N_d= -35 kN/+19 kN

Bovenin (h=320mm):
M_{dy}= 0 kNm
M_{dz}= 0 kNm
V_d= 39/-13 kN
N_d= -30 kN/+20 kN

k_{cr}= 2,5/3,50 = 0,71
σ_{vd}= 1,5 x 52 x10^3 / (0,71$_{kcr}$ x 200x730) = 0,75 N/mm^2 < f_{vd}= 3,50 x 0,90/1,25 =2,52 N/mm^2
σ_{vd}= 1,5 x 39 x10^3 / (0,71$_{kcr}$ x 200x320) = 1,25 N/mm^2 < f_{vd}= 3,50 x 0,90/1,25 =2,52 N/mm^2

Er wordt gerekend met de halve liggerhoogte (=conservatief):

BEREKENING KOLOM OP 2 STEUNPUNTEN												V2.0
b (kolom):	200	mm		A	=	1050	cm^2		Hout kw:	GL 28h	keuze	
h (kolom):	525	mm		W_y	=	9188	cm^3		Gevolg Klasse :	CC2	keuze	
L_y :	6,52	m		I_y	=	2,41E+05	cm^4		Klim.kl :	2	keuze	
L_z :	6,52	m		k_h	=	1,01	fac		Belasting:	boven	keuze	
M_d :	148,00	kN		k_{mod}	=	0,90	fac		Steunen:	boven	keuze	
N_d :	35,00	kN										
Krachstwerking:									**$UC_{max,uls}$ =**	**0,82**		
Controle Uiterste grenstoestand: NEN 1995-1-1:2005+C1:2006												
10.6.b:druk+buiging:				$\sigma_{c;0;d}$	=	0,33	N/mm^2	<	$f_{c;0;u;d}$ =	20,16	N/mm^2	*UC : 0,02*
(kmod = 0,90)			art 6.3.2. vgl.6.23	$\sigma_{c;0;d}$ /(k_{cy} * $f_{c;o;d}$) + $\sigma_{m;y;d}/f_{m;y;d}$				=	0,33/(0,929*20,16)+16,11/20,16=			*UC : 0,82*
			art 6.3.2. vgl.6.24	$\sigma_{c;0;d}$ /(k_{cz} * $f_{c;o;d}$) + km * ($\sigma_{m;y;d}/f_{m;y;}$				=	0,33/(0,273*20,16)+(0,7*16,11)/20,16=			*UC : 0,62*
			art 6.3.3. vgl.6.33	(lef = 6918mm ; σm;crit = 90,20 N/mm2 ; λrel = 0,56 ; kcrit = 1,000)								
$M_{d(6.10.b)}$=	148,00	kNm		$\sigma_{m;d}$	=	16,11	N/mm^2	<	k_{crit} x $f_{m;d}$ =	20,16	N/mm^2	*UC : 0,80*
Nd =	35,00	kN	art 6.3.3. vgl.6.35	0,64 (buiging)				+	0,06 (druk)		=	*UC : 0,70*

4.2.4 Houten kruiskolom

Dimensies: 200x $960_{onder}/760_{boven}$ mm

Bovenaan (h=760mm)
M_{dy}= -73 kNm/+160 kNm
M_{dz}= -18 kNm/+11 kNm
V_{dz}= -22 kN/+7 kN
V_{dy}= -22 kN/+19 kN
N_d= -258 kN/+67 kN

Onderaan (h=960mm):
M_d= -102 kNm/+272 kNm
M_{dz}= -100 kNm/+100 kNm
V_{dz}= -31 kN/+7 kN
V_{dy}= -22 kN/+19 kN
N_d= -267 kN/+61 kN

Er wordt een kruiskolom toegepast. De kruis wordt omgezet naar een vierkante doorsnede t.b.v. de controle, zie volgende pagina:
$I_{y,kruis}$= 768960x10^4 mm^4
$W_{y,kruis}$= 20236x$10^3$$mm^3$
A_y= 264000 mm^2

Doorsnede 200x775mm:
I_y= 1/12 x 200 x 775^3 = 775807 x10^4 mm^4
W_y= 1/6 x 200 x 775^2 = 20020 x 10^3 mm^3
A_y= 200x775 = 155000 mm^2 → dwarskracht niet maatgevend

Er wordt een ongunstige kniklente aangehouden van l_{buc}= 1,5x4,3l_y=6,45m. Door de inklemming onder en boven is l_{buc} in werkelijkheid kleiner.
De momenten in de sterkte en zwakke richting van de het profiel treden niet tegelijk op. Zie ook reactiekrachten op fundatie in paragraaf 4.4.

BEREKENING KOLOM OP 2 STEUNPUNTEN													V2.0
b (kolom):	200	mm		A	=	1550	cm^2		Hout kw:	GL 28h		keuze	
h (kolom):	775	mm		W_y	=	20021	cm^3		Gevolg Klasse :	CC2		keuze	
L_y :	6,45	m		I_y	=	7,76E+05	cm^4		Klim.kl :	2		keuze	
L_z :	6,45	m		k_h	=	1,00	fac		Belasting:	boven		keuze	
M_d :	272,00	kN		k_{mod}	=	0,90	fac		Steunen:	boven		keuze	
N_d :	267,00	kN											
Krachtswerking:									**$UC_{max,uls}$ =**	**0,78**			
Controle Uiterste grenstoestand: NEN 1995-1-1:2005+C1:2006													
10.6.b:druk+buiging:				$\sigma_{c;0;d}$	=	1,72	N/mm^2	<	$f_{c;0;u;d}$ =	20,16	N/mm^2		*UC : 0,09*
(kmod = 0,90)			art 6.3.2. vgl.6.23	$\sigma_{c;0;d}$ /(k_{cy} * $f_{c;o;d}$) + $\sigma_{m;y;d}$/$f_{m;y;d}$				=	1,72/(0,978*20,16)+13,59/20,16=				*UC : 0,76*
			art 6.3.2. vgl.6.24	$\sigma_{c;0;d}$ /(k_{cz} * $f_{c;o;d}$) + km * ($\sigma_{m;y;d}$/$f_{m;y;d}$				=	1,72/(0,279*20,16)+(0,7*13,59)/20,16=				*UC : 0,78*
			art 6.3.3. vgl.6.33	(lef = 7355mm ; σm;crit = 57,47 N/mm2 ; λrel = 0,70 ; kcrit = 1,000)									
$M_{d(6.10.b)}$=	272,00	kNm		$\sigma_{m;d}$	=	13,59	N/mm^2	<	k_{crit} x $f_{m;d}$ =	20,16	N/mm^2		*UC : 0,67*
Nd =	267,00	kN	art 6.3.3. vgl.6.35	0,45 (buiging)				+	0,31 (druk)		=		*UC : 0,76*

k_{cr}= 2,5/3,50 = 0,71
σ_{vd}= 1,5 x 31 x10^3 / (0,71$_{kcr}$ x 155000) = 0,43 N/mm^2 < f_{vd}= 3,50 x 0,90/1,25 =2,52 N/mm^2

Toetsing uitlopende vezel:
α=tan((960-730)/4300)-1= 3,1°
$k_{m,\alpha,trek}$= 1 / (1+(20,16$_{fmd}$ / (0,75x2,52 x tan 3,1)^2 + (20,16/0,43 x tan 3,1^2)^2 = 0,731 (trek) - form. 6.39
$k_{m,\alpha,druk}$= 1 / (1+(20,16$_{fmd}$ / (1,50x2,52 x tan 3,1)^2 + (20,16/1,80 x tan 3,1^2)^2 = 0,922 (druk) - form. 6.40

Controle buigspanning bij uitlopende vezel:
σ_{md} = 272x10^6/ (20236x10^3)$_{wy}$ =13,44 N/mm^2 < $f_{m,d}$= 0,731$_{km\alpha}$ x 20,16$_{fmd}$ = 14,74 N/mm^2

Doorsnede-eigenschappen

Bepalen van doorsnede-eigenschappen van een zelf samengestelde doorsnede, met gelijke elasticiteitmoduli. Resultaten worden weergegeven om de getekende assen y en z, de hoofdassen α en β, en de zelf gekozen assen η en ξ.

Invoer elementen

element nr.	breedte b (mm)	hoogte h (mm)	begincoördinaat y (mm)	begincoördinaat z (mm)	hoek met y-as (°)
1	200	760	-100	0	0
2	280	200	100	280	0
3	280	200	-380	280	0
4	0	0	0	0	0
5	0	0	0	0	0
6	0	0	0	0	0
7	0	0	0	0	0
8	0	0	0	0	0
9	0	0	0	0	0
10	0	0	0	0	0

zwaartepunt $z_{p,y}$ (mm)	$z_{p,z}$ (mm)
0,0	380,0

oppervlakte A (mm^2)
264000,0

hoofdassen α	β
0,0 °	90,0 °

vrije askeuze η	ξ	
0,0 °	90,0 °	(t.o.v. y)
0,0 °	90,0 °	(t.o.v. α)

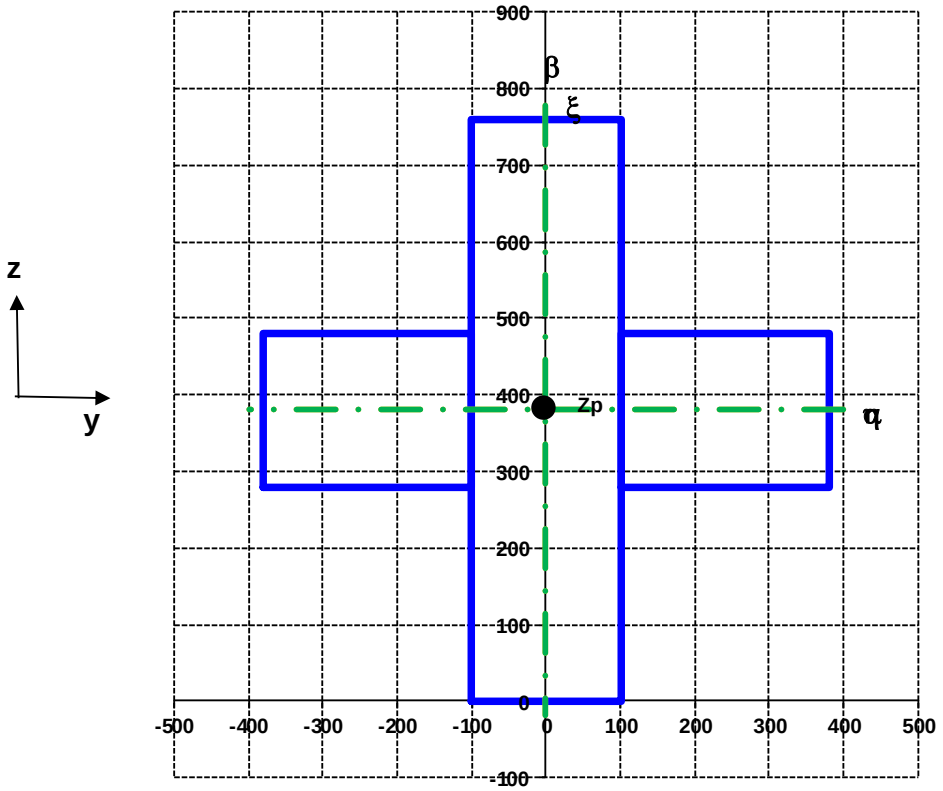

Doorsnede-eigenschappen

doorsnede-eigenschap		y- en z-as y	y- en z-as z	y- en z-as yz	hoofdassen α	hoofdassen β	hoofdassen αβ	vrije askeuze η	vrije askeuze ξ	vrije askeuze ηξ	
breedte	b	760,0	-	-	760,0	-	-	760,0	-	-	(mm)
hoogte	h	760,0	-	-	760,0	-	-	760,0	-	-	(mm)
uiterste vezel	e	380,0	380,0	-	380,0	380,0	-	380,0	380,0	-	(mm)
traagheidsmoment	I	7,69E+09	7,69E+09	0,00E+00	7,69E+09	7,69E+09	0,00E+00	7,69E+09	7,69E+09	0,00E+00	(mm^4)
traagheidsstraal	i	170,7	170,7	-	170,7	170,7	-	170,7	170,7	-	(mm)
weerstandsmoment	W	2,02E+07	2,02E+07	-	2,02E+07	2,02E+07	-	2,02E+07	2,02E+07	-	(mm^3)
polair traagheidsmomen	I_p	1,54E+10	-	-	1,54E+10	-	-	1,54E+10	-	-	(mm^4)
torsietraagheidsmoment	I_w	2,53E+09	-	-	2,53E+09	-	-	2,53E+09	-	-	(mm^4)

4.3 Toetsing stalen onderdelen

4.3.1 Overzicht krachten

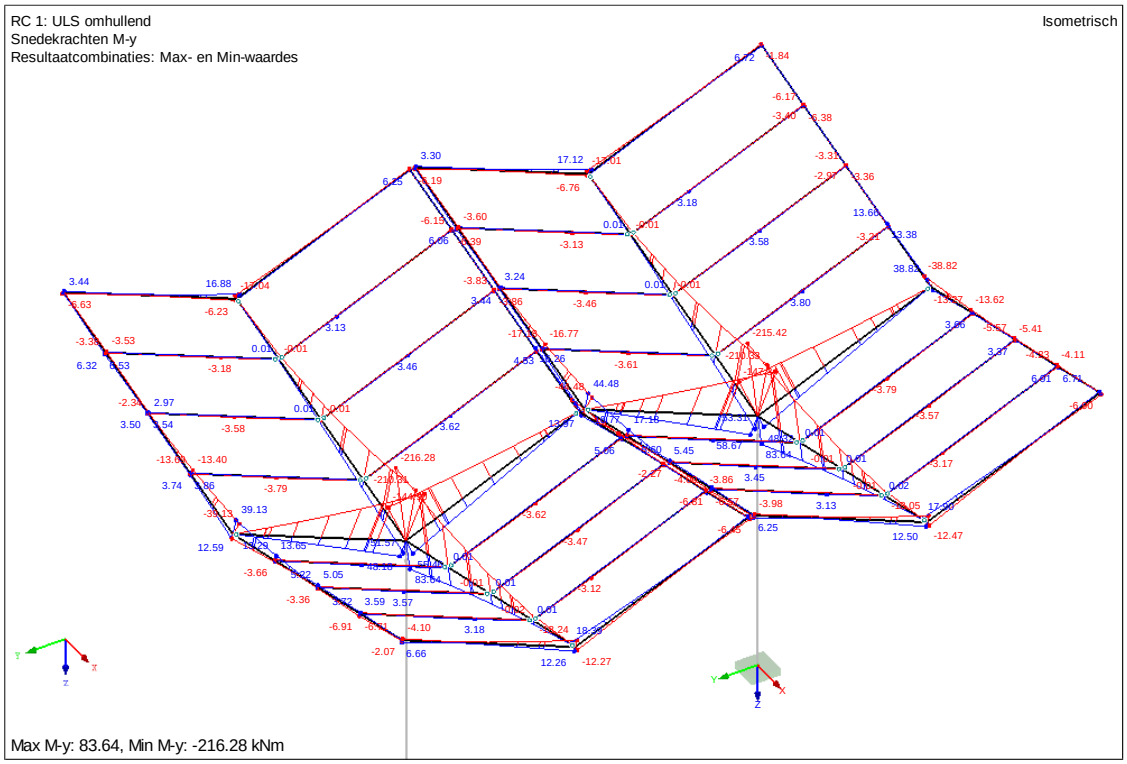

Figuur 30: Momenten M_y in ULS

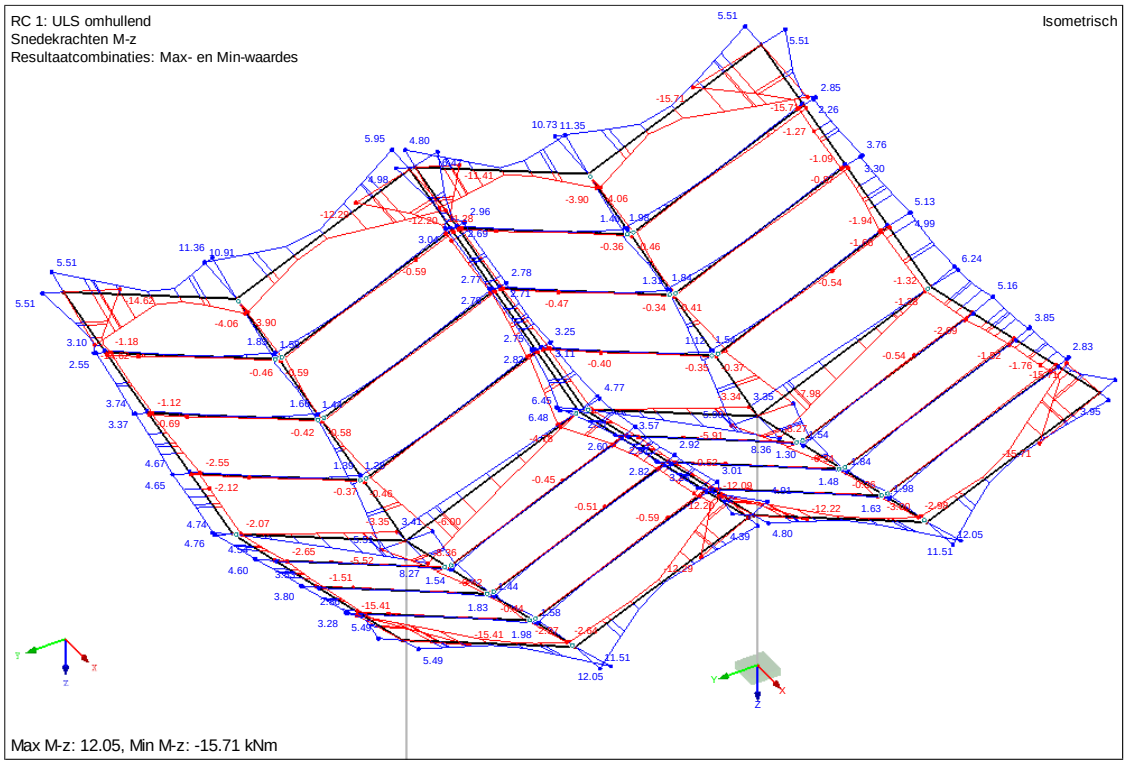

Figuur 31: Momenten M_z in ULS

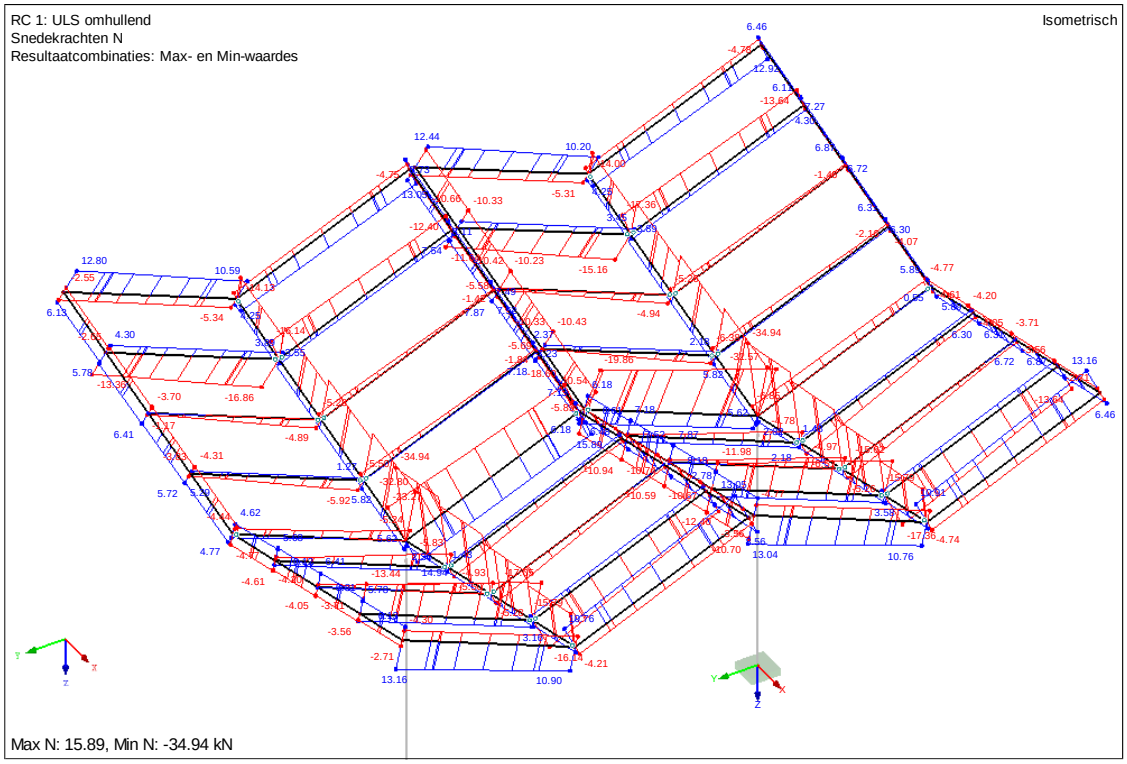

Figuur 32: Normaalkrachtenlijn in ULS

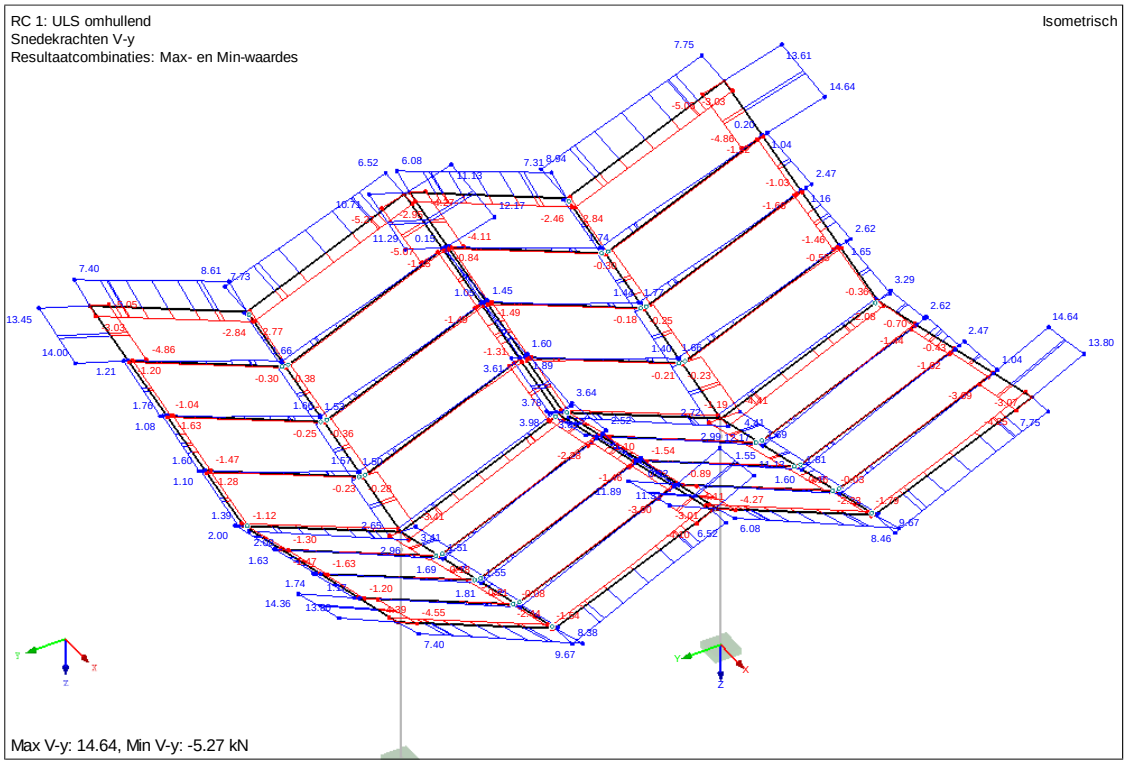

Figuur 33: Dwarskrachtenlijn V_y in ULS

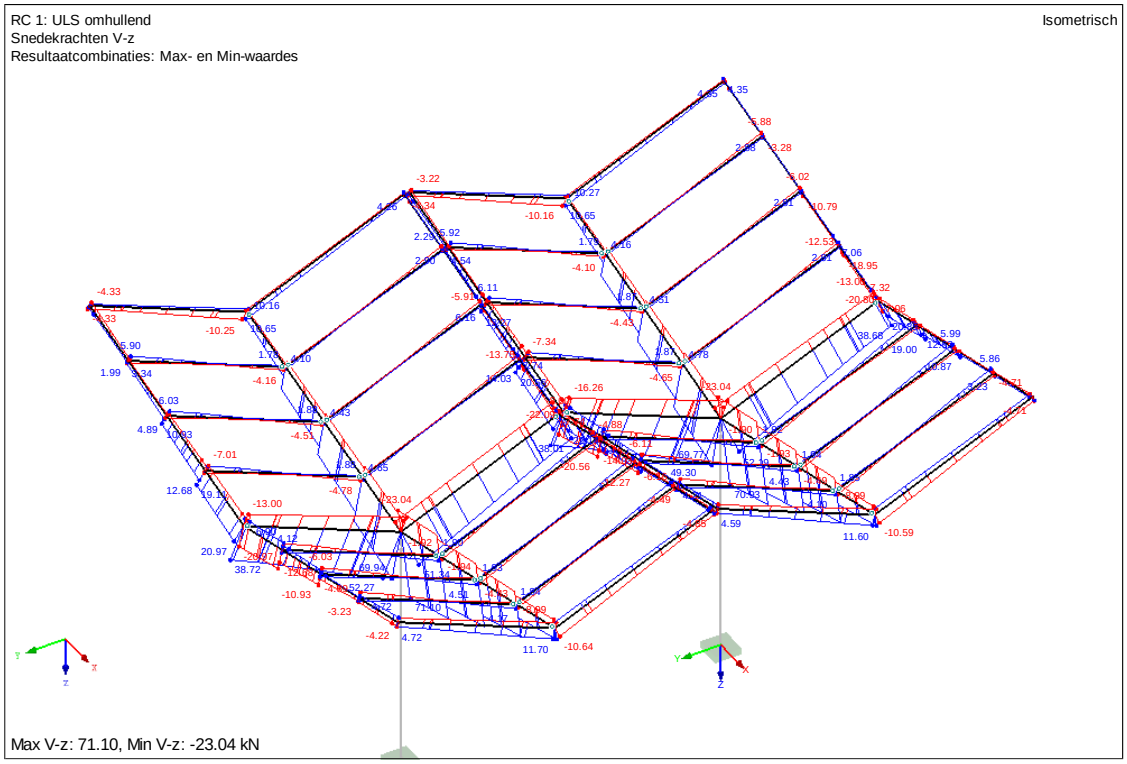

Figuur 34: Dwarskrachtenlijn V_z in ULS

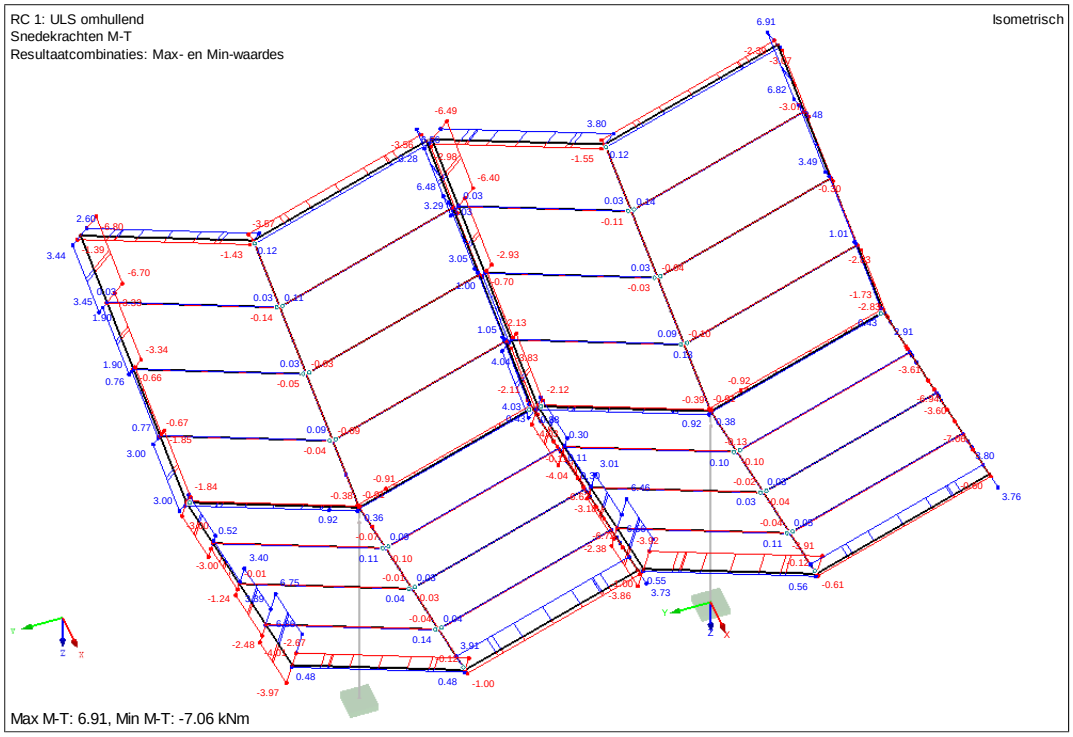

Figuur 35: Momenten M_{tor} in ULS

De toetsing van de profielen vindt plaats in RFEM.
De volgende unity checks volgen uit de berekening:

Koker 250x150x6: UC = 0,30 < 1,0
Koker 100x60x4: UC = 0,40 < 1,0

4.4 Overzicht reactiekrachten

In deze paragraaf is een overzicht te vinden van de reactiekrachten:

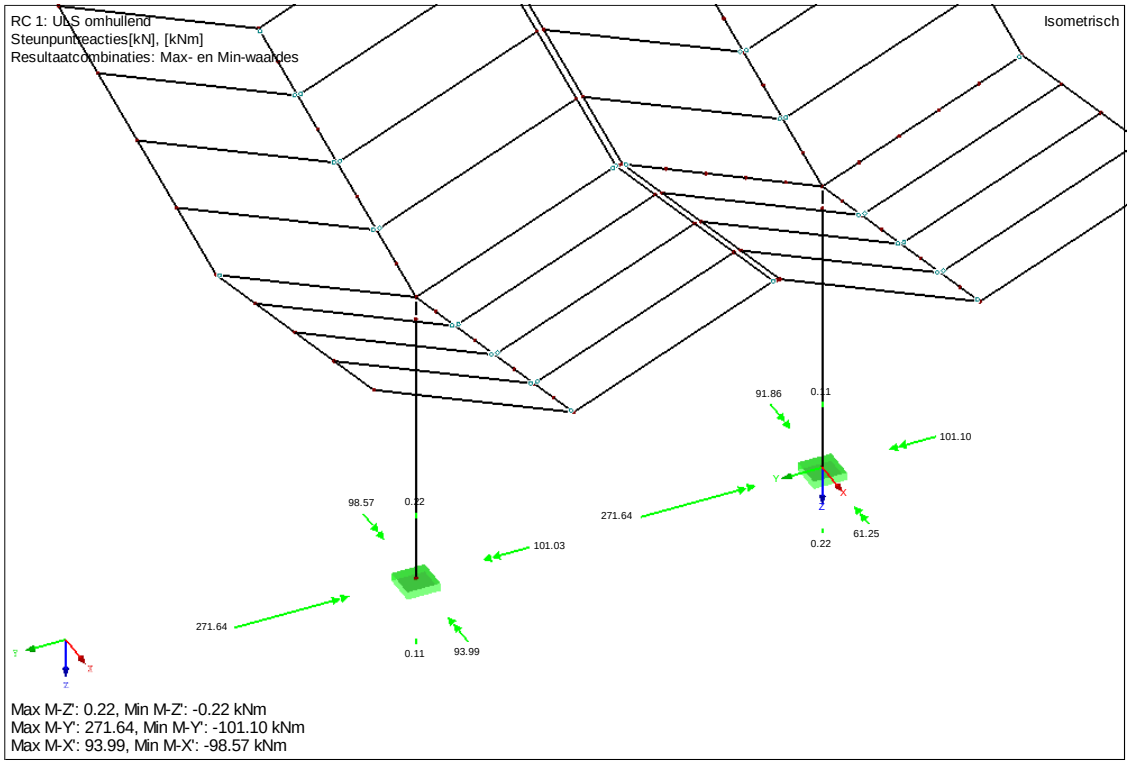

Figuur 36: Reactiekrachten momenten in ULS

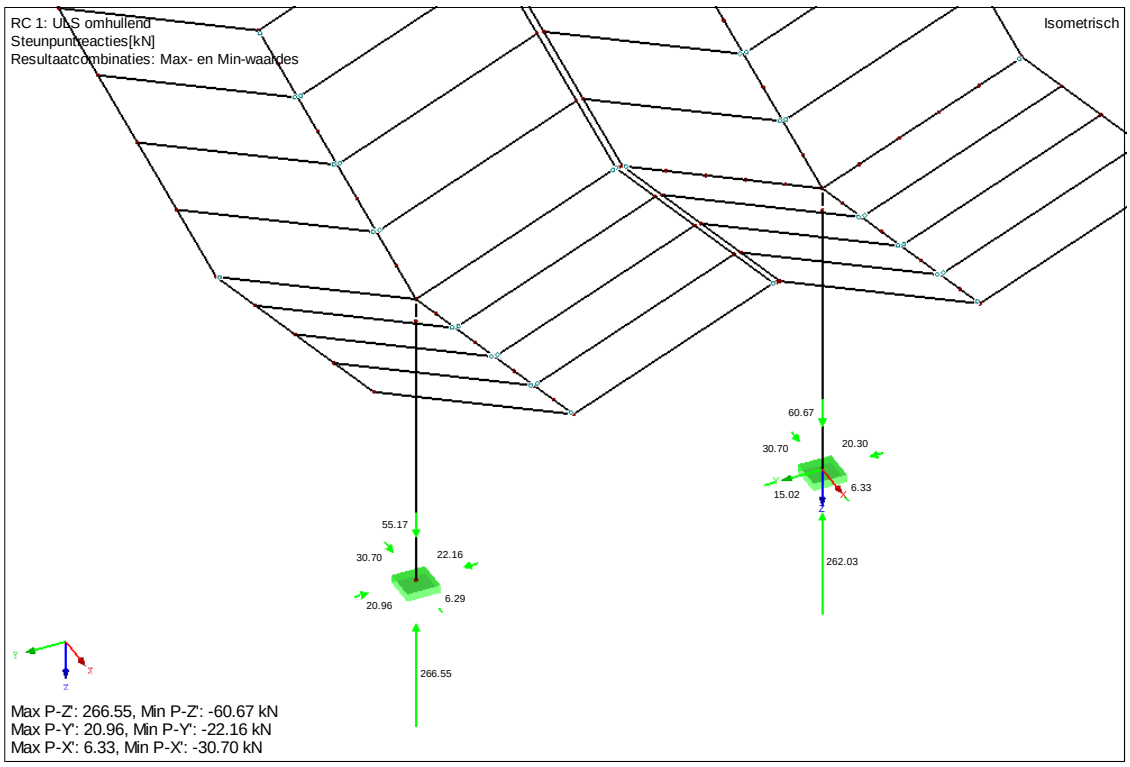

Figuur 37: Reactiekrachten horizontaal/verticaal in ULS

Knoop		Reactiekrachten [kN]			Reactiemomenten [kNm]			
No.		$P_{X'}$	$P_{Y'}$	$P_{Z'}$	$M_{X'}$	$M_{Y'}$	$M_{Z'}$	
1	Max	6,33	15,02	262,03	61,25	271,64	0,22	
	Min	-30,70	-20,30	-60,67	-91,86	-101,10	-0,11	
	Max $P_{X'}$	**6,33**	3,21	188,52	-2,17	-101,10	-0,11	BC 6
	Min $P_{X'}$	**-30,70**	0,90	-5,21	4,80	271,64	0,22	BC 23
	Max $P_{Y'}$	0,00	**15,02**	-60,67	61,25	0,00	0,00	BC 14
	Min $P_{Y'}$	-17,97	**-20,30**	29,95	-89,01	70,95	0,00	BC 21
	Max $P_{Z'}$	-8,98	-11,28	**262,03**	-61,13	35,88	0,00	BC 9
	Min $P_{Z'}$	0,00	15,02	**-60,67**	61,25	0,00	0,00	BC 14
	Max $M_{X'}$	0,00	15,02	-60,67	**61,25**	0,00	0,00	BC 14
	Min $M_{X'}$	-17,97	-18,82	211,52	**-91,86**	71,57	0,00	BC 5
	Max $M_{Y'}$	-30,70	0,90	-5,21	4,80	**271,64**	0,22	BC 23
	Min $M_{Y'}$	6,33	3,21	188,52	-2,17	**-101,10**	-0,11	BC 6
	Max $M_{Z'}$	-30,70	0,90	-5,21	4,80	271,64	**0,22**	BC 23
	Min $M_{Z'}$	6,33	3,21	188,52	-2,17	-101,10	**-0,11**	BC 6
9	Max	6,29	20,96	266,55	93,99	271,64	0,11	
	Min	-30,70	-22,16	-55,17	-98,57	-101,03	-0,22	
	Max $P_{X'}$	**6,29**	15,14	100,34	62,44	-100,07	0,11	BC 18
	Min $P_{X'}$	**-30,70**	-0,90	-5,21	-4,79	271,64	-0,22	BC 23
	Max $P_{Y'}$	0,00	**20,96**	227,80	93,99	0,00	0,00	BC 2
	Min $P_{Y'}$	-17,97	**-22,16**	-40,37	-98,57	70,67	-0,01	BC 21
	Max $P_{Z'}$	0,00	16,97	**266,55**	82,13	0,00	0,00	BC 8
	Min $P_{Z'}$	-17,97	-3,50	**-55,17**	-18,74	70,67	0,00	BC 15
	Max $M_{X'}$	0,00	20,96	227,80	**93,99**	0,00	0,00	BC 2
	Min $M_{X'}$	-17,97	-22,16	-40,37	**-98,57**	70,67	-0,01	BC 21
	Max $M_{Y'}$	-30,70	-0,90	-5,21	-4,79	**271,64**	-0,22	BC 23
	Min $M_{Y'}$	6,29	19,69	203,05	87,00	**-101,03**	0,11	BC 6
	Max $M_{Z'}$	6,29	19,69	203,05	87,00	-101,03	**0,11**	BC 6
	Min $M_{Z'}$	-30,70	-0,90	-5,21	-4,79	271,64	**-0,22**	BC 23

5 Toetsing eigen frequentie

Voor luifels op vrijstaande kolommen kan de eigen frequentie van belang. Eigen frequenties kleiner dan 3,0 Hz zijn gevoelig voor resonantie, wanneer ze door wind worden aangewaaid. Dit kan leiden tot verhoging van de krachten en vervormingen. Er wordt gerekend volgens NEN 6702, aangezien in de Eurocode niets over dit onderwerp wordt vermeld. Er wordt gerekend met een dempingsmaat van 0,05 voor houtconstructies.

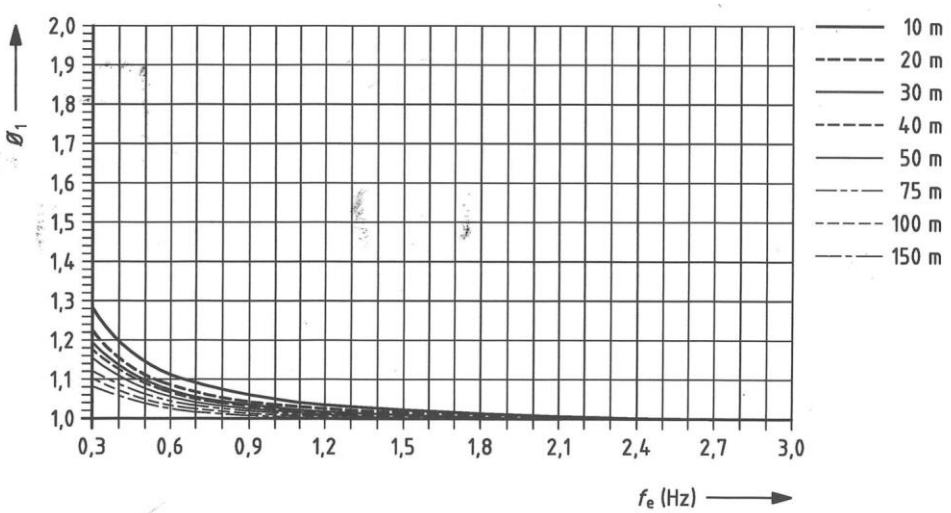

Figuur 38: Vergrotingsfactor $\theta_1$voor bouwwerken met een dempingsmaat van 0,05 (hout)

De eigen frequentie van het station wordt middels in het 3d pakket onderzocht. Dit zorgt voor de volgende eigen frequenties:

Tabel 1: Overzicht eigen frequenties

5.1 EIGENFREQUENTIES: ESF1

Vorm No.	Eigenwaarde λ	Hoekfrequentie ω [rad/s]	Eigenfrequentie f [Hz]	Eigenperiode T [s]	
1	142.309	11.929	1.899	0.527	
2	243.344	15.599	2.483	0.403	
3	459.871	21.445	3.413	0.293	
4	551.078	23.475	3.736	0.268	
5	565.965	23.790	3.786	0.264	
6	1441.657	37.969	6.043	0.165	
7	1532.769	39.151	6.231	0.160	
8	1725.015	41.533	6.610	0.151	
9	1759.040	41.941	6.675	0.150	
10	1865.235	43.188	6.874	0.145	

Zie ook aan het einde van bijlage II voor een overzicht van de in- en uitvoer.

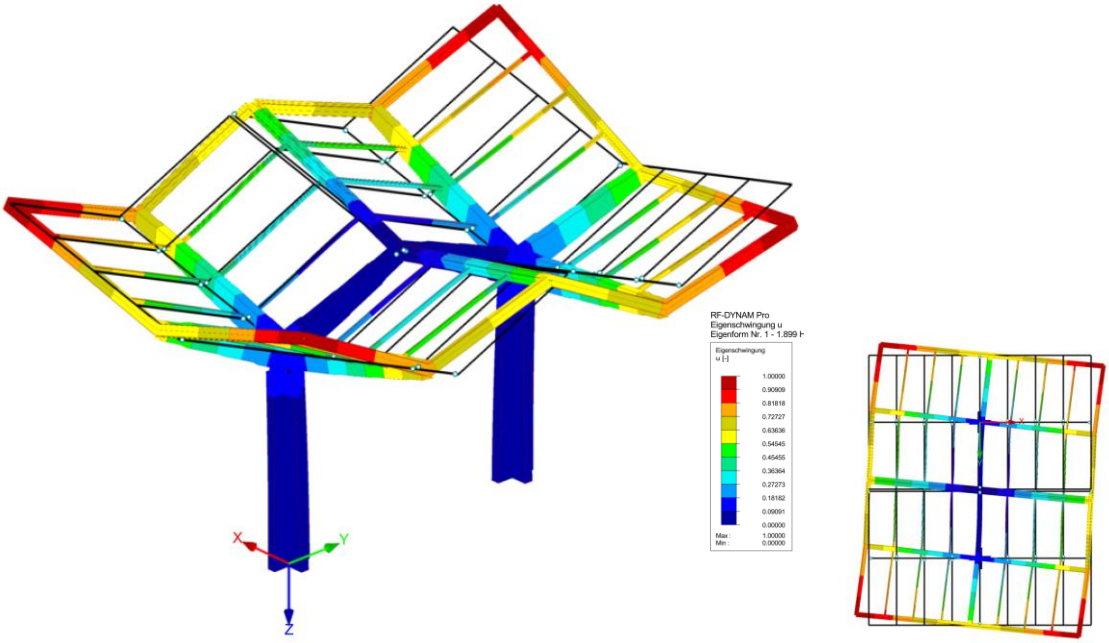

Figuur 39: 1e eigen frequentie: f_e= 1,899 Hz

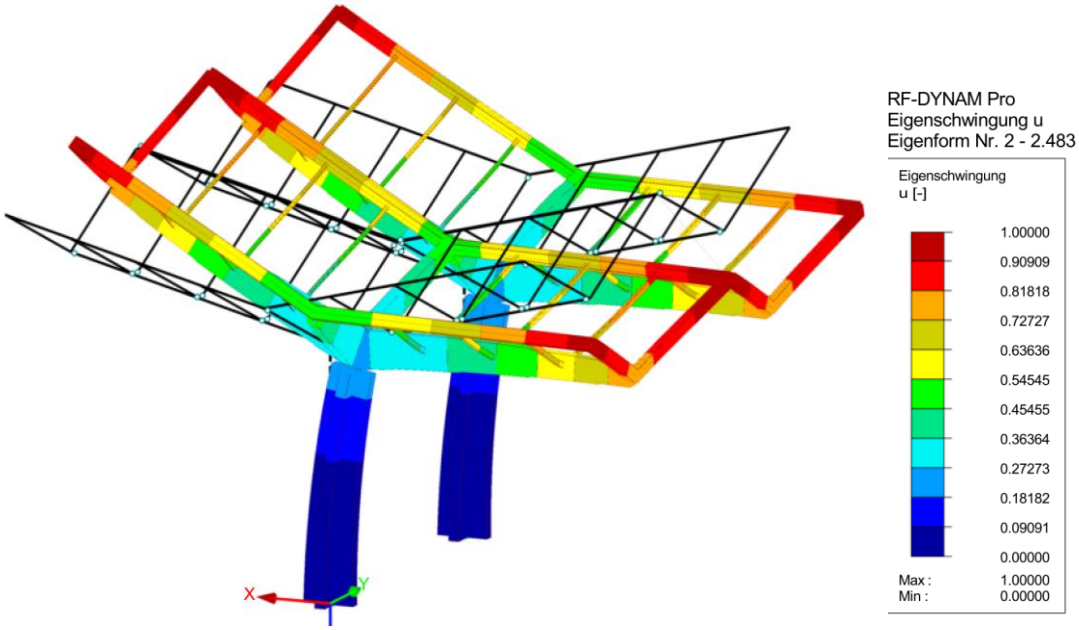

Figuur 40: 2e eigen frequentie: f_e= 2,483 Hz

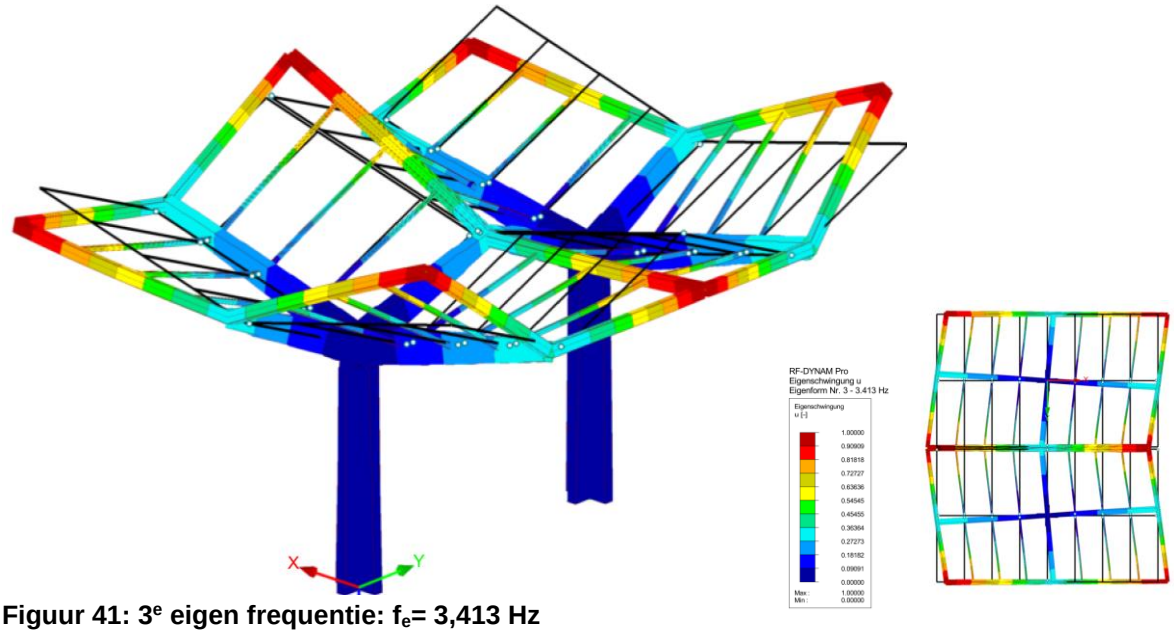

Figuur 41: 3e eigen frequentie: f_e= 3,413 Hz

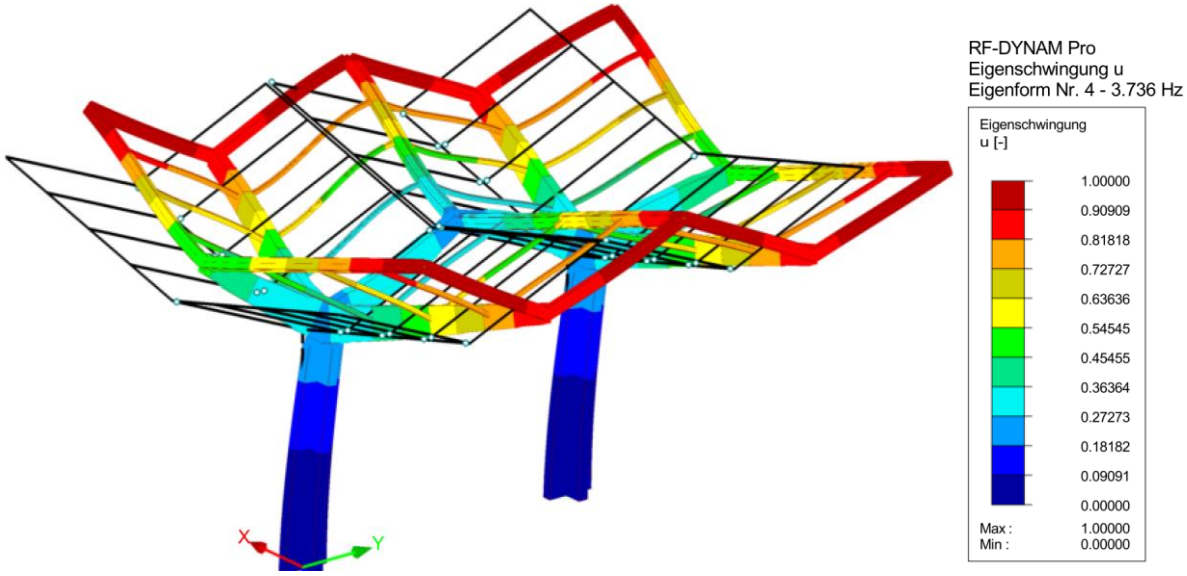

Figuur 42: 4e eigen frequentie: f_e= 3,736 Hz

Aan de hand van bovenstaande eigen frequentie kan de dynamische vergrotingsfactor bepaald worden met:.

$$\phi_1 = \frac{1 + 7 \cdot I(h) \cdot \sqrt{(B+E)}}{1 + 7 \cdot I(h) \cdot \sqrt{B}}$$

waarbij:

$$E = \frac{0{,}0394 \cdot f_e^{-\frac{2}{3}}}{D \times (1 + 0{,}1 f_e \cdot h) \times (1 + 0{,}16 f_e \cdot b_m)}, \text{ en}$$

$$B = \frac{1}{0{,}94 + 0{,}021\, h^{\frac{2}{3}} + 0{,}029\, b^{\frac{2}{3}}}, \text{ en} \qquad I(h) = \frac{1}{\ln\left(\frac{h}{0{,}2}\right)}$$

1) 1,877 Hz → B = 0,868 en E=0,0546 → θ_1= 1,020
2) 2,483 Hz → B = 0,868 en E=0,0315 → θ_1= 1,011
3) 3,413 Hz → B = 0,865 en E=0,0158 → θ_1= 1,005
4) 3,736 Hz → B = 0,865 en E=0,0129 → θ_1= 1,005

Wanneer de vorm van de eigen frequentie gelijk is aan de vervorming behorende bij een bepaald belastinggeval, dient voor deze situatie de dynamische vergrotingsfactor te worden toegepast.

In alle gevallen is er voldoende ruimte in de sterkte en stijfheid van de verschillende onderdelen om deze factor van maximaal 102% op te vangen.

In Nederland mag nog worden gereduceerd in verband met de ontwerplevensduur van 15 jaren; de factor φ_t. Gezien deze factor niet is toegepast in deze berekening is er voldoende sterkte en stijfheid over om bovenstaande dynamische vergrotingsfactor op te vangen.

BIJLAGEN

Bijlage I: Overzicht brandwerendheidseisen

Uitgangspunten:
uitwerking bouwbesluit nieuwbouw (per september 2005)

Gebouwen met woonfunctie
(woningen, woongebouwen, woonwagen)

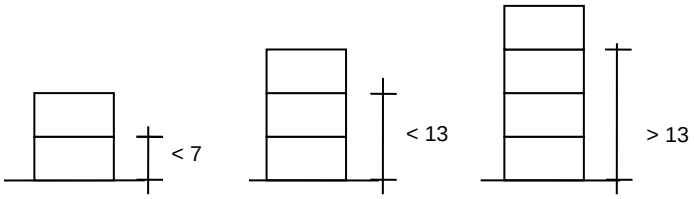

Hoogste verblijfsgebied	h ≤ 7 m	7 m < h ≤ 13 m	h > 13 m
basiseis	60 minuten	90 minuten	120 minuten
reductie	30 minuten	---	---

Gebouwen met gebruiksfunctie
(overige gebouwen)

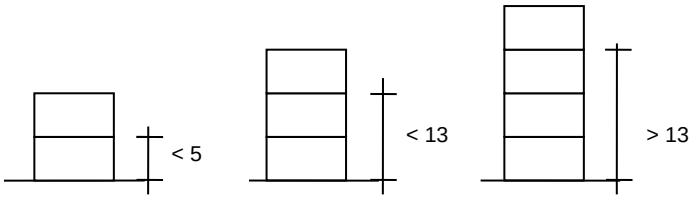

Hoogste verblijfsgebied	h ≤ 5 m	5 m < h ≤ 13 m	h > 13 m
basiseis	60 minuten	90 minuten	120 minuten
reductie	30 minuten	30 minuten	30 minuten

Gebouwen zonder logiesfunctie
(kantoren / scholen / winkels / bedrijfsgebouwen / sporthal / schouwburg / station)

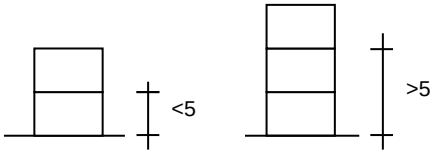

Hoogste verblijfsgebied	**h ≤ 5 m**	h > 5 m
basiseis	**geen eis**	90 minuten
reductie	-	30 minuten

opmerking:
reductie van 30 minuten op basis van geringe aanwezige permanente vuurbelasting (<500 MJ/m^2).

Bijlage II: Uitvoer 3d model

CONSTRUCTIEVE BEREKENING

PROJECT

Fastned 4.0

KLANT

Fastned

AUTEUR

Isometrisch

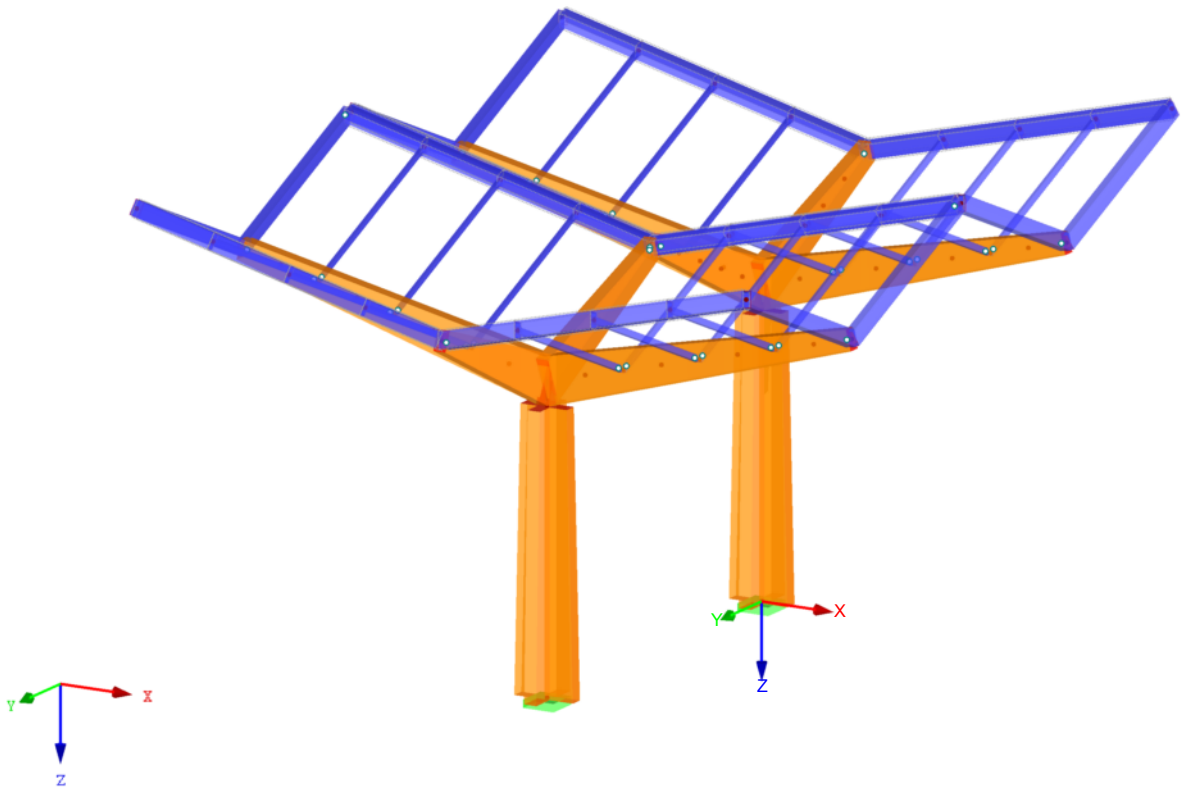

INHOUD

	Algemene Gegevens Model	3
	EE-Netinstellingen	3
1	**Model**	
1.1	Knopen	4
Grafisch	knoopnummering, Isometrisch	5
1.2	Lijnen	5
Grafisch	lijnnummering, Isometrisch	7
1.3	Materialen	7
1.7	Steunpunten	7
1.13	Doorsnedes	7
1.14	Staafeindscharnieren	8
1.17	Staven	8
Grafisch	staafnummering, Isometrisch	9
1.21	Staafverzamelingen	9
Grafisch	Model, Isometrisch	10
2	**Belastingsgevallen - en combinaties**	
2.1	Belastingsgevallen	11
2.5	Belastingscombinaties	11
2.7	Resultaatcombinaties	14
3	**Belastingen**	
	BG2 - Permanente belasting - 3.15 Gegenereerde Lasten	14
Grafisch	BG2 - BG2: Permanente belasting, Isometrisch	15
Grafisch	BG2 - BG2: Permanente belasting, Isometrisch	15
	BG3 - Sneeuwbelasting - 3.15 Gegenereerde Lasten	16
Grafisch	BG3 - BG3: Sneeuwbelasting, Isometrisch	17
	BG4 - Windbelasting vol neerwaarts - 3.15 Gegenereerde Lasten	18
Grafisch	BG4 - BG4: Windbelasting vol neerwaarts, Isometrisch	19
	BG5 - Windbelasting vol opwaarts - 3.15 Gegenereerde Lasten	20
Grafisch	BG5 - BG5: Windbelasting vol opwaarts, Isometrisch	21
	BG6 - Wind van links, aangeblazen vlak - 3.2 Staafbelastingen	22
	BG6 - Wind van links, aangeblazen vlak - 3.15 Gegenereerde Lasten	22
Grafisch	BG6 - BG6: Wind van links, aangeblazen vlak, Isometrisch	23
	BG7 - Wind van boven, aangeblazen vlak - 3.2 Staafbelastingen	24
	BG7 - Wind van boven, aangeblazen vlak - 3.15 Gegenereerde Lasten	24
Grafisch	BG7 - BG7: Wind van boven, aangeblazen vlak, Isometrisch	25
	BG8 - Windbelasting half neerwaarts - 3.15 Gegenereerde Lasten	26
Grafisch	BG8 - BG8: Windbelasting half neerwaarts, Isometrisch	27
	BG9 - Windbelasting half2 neerwaarts - 3.15 Gegenereerde Lasten	28
Grafisch	BG9 - BG9: Windbelasting half2 neerwaarts, Isometrisch	29
	BG10 - Windbelasting half opwaarts - 3.15 Gegenereerde Lasten	30
Grafisch	BG10 - BG10: Windbelasting half opwaarts, Isometrisch	31
	BG11 - Windbelasting half2 opwaarts - 3.15 Gegenereerde Lasten	32
Grafisch	BG11 - BG11: Windbelasting half2 opwaarts, Isometrisch	33
	BG12 - Personenbelasting - 3.1 Knoopbelastingen - Per component - Coördinatensysteem	34
Grafisch	BG12 - BG12: Personenbelasting, Isometrisch	34
4	**Resultaten - Belastingsgevallen, -combinaties**	
4.1	Knopen - Reactiekrachten	35
	Resultaten - Resultaatcombinaties	
4.1	Knopen - Reactiekrachten	36
Grafisch	Snedekrachten N - STAAL, RC1: ULS omhullend, Isometrisch	36
Grafisch	Snedekrachten V_y - STAAL, RC1: ULS omhullend, Isometrisch	37
Grafisch	Snedekrachten V_z - STAAL, RC1: ULS omhullend, Isometrisch	37
Grafisch	Snedekrachten M_T - STAAL, RC1: ULS omhullend, Isometrisch	38
Grafisch	Snedekrachten M_y - STAAL, RC1: ULS omhullend, Isometrisch	38
Grafisch	Snedekrachten M_z - STAAL, RC1: ULS omhullend, Isometrisch	39
Grafisch	Snedekrachten N - HOUT, RC1: ULS omhullend, Isometrisch	39
Grafisch	Snedekrachten V_y - HOUT, RC1: ULS omhullend, Isometrisch	40
Grafisch	Snedekrachten V_z - HOUT, RC1: ULS omhullend, Isometrisch	40
Grafisch	Snedekrachten M_T - HOUT, RC1: ULS omhullend, Isometrisch	41
Grafisch	Snedekrachten M_y - HOUT, RC1: ULS omhullend, Isometrisch	41
Grafisch	Snedekrachten M_z - HOUT, RC1: ULS omhullend, Isometrisch	42
Grafisch	Globale vervorming uz inclusief kruip, RC3: SLS omhullend+kruip, Isometrisch	42
4.12	Doorsnedes - Snedekrachten	43
	Controle stalen onderdelen volgens EC3	
	BG1 - Ontwerp van stalen staven volgens Eurocode 3	
1.1	Algemene gegevens	174
1.2	Materialen	174
1.3	Doorsnedes	174
1.5	Kniklengtes - Staven	174
1.6	Kniklengtes - Staafverzamelingen	174
1.7	Steunpunten	175
1.12	Parameters - Staven	175
1.13	Parameters - Staafverzamelingen	177
2.3	Berekening per Staafverzameling	177
2.4	Berekening per Staaf	181

ALGEMENE GEGEVENS MODEL

Algemeen	Modelnaam	:	Fastned 4.0-definitief
	Modelomschrijving	:	Fastned 4.0
	Modeltype	:	3D
	Positieve richting van globale z-as	:	Naar beneden
	Classificatie van belastingsgevallen en combinaties	:	Volgens norm: EN 1990 Nationale Bijlage: NEN:2011 - Netherlands

Opties	☐	RF-FORM-FINDING - Vind aanvangsevenwichtsvormen van membranen en kabelconstructies
	☐	RF-CUTTING-PATTERN
	☐	Leidingwerk berekening
	☐	Gebruik CQC regel
	☐	CAD/BIM model mogelijk maken

Standaard zwaartekracht		
g	:	10.00 m/s^2

EE-NETINSTELLINGEN

Algemeen	Doellengte van eindige elementen	l_{FE}	:	0.5 m
	Max. afstand tussen een knoop en een lijn om in de lijn te integreren	ε	:	0.0 m
	Max. aantal netknopen (in duizenden)		:	500

Staven	Aantal staafverdelingen van kabels,	:	10
	Elastische bedding, voutes of plastische karakteristiek		
	☒ Stel staafverdelingen in voor grote vervorming of post-kritische berekening		

EE-NETINSTELLINGEN

☒ Gebruik staafverdeling door de knopen die op de staaf liggen

Vlakken	Max. verh. van EE-rechthoekdiagonalen	Δ_D	:	1.800
	Max. uit-het-vlak hoek van twee EE uit het vlak	α	:	0.50 °
	Vorm van de eindige elementen		:	Driehoeken en schalen ☒ Gelijke Vierhoeken genereren indien mogelijk

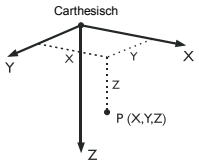

1.1 KNOPEN

Knoop No.	Knooptype	Reference Node	Coordinate System	Knoopcoördinaten X [m]	Y [m]	Z [m]	Opm.
1	Standaard	-	Carthesisch	0.000	0.000	0.000	
2	Standaard	-	Carthesisch	-5.000	3.000	-7.215	
3	Standaard	-	Carthesisch	-5.000	0.000	-5.940	
4	Standaard	-	Carthesisch	5.000	0.000	-5.940	
6	Standaard	-	Carthesisch	-5.000	-3.000	-7.215	
7	Standaard	-	Carthesisch	0.000	-3.000	-5.940	
8	Standaard	-	Carthesisch	5.000	-3.000	-7.215	
9	Standaard	-	Carthesisch	0.000	6.100	0.000	
10	Standaard	-	Carthesisch	-5.000	9.100	-7.215	
11	Standaard	-	Carthesisch	-5.000	3.000	-7.215	
12	Standaard	-	Carthesisch	0.000	3.000	-5.940	
13	Standaard	-	Carthesisch	5.000	3.000	-7.215	
22	Standaard	-	Carthesisch	-1.250	-3.000	-6.259	
23	Standaard	-	Carthesisch	-2.500	-3.000	-6.577	
24	Standaard	-	Carthesisch	-3.750	-3.000	-6.896	
25	Standaard	-	Carthesisch	1.250	-3.000	-6.259	
26	Standaard	-	Carthesisch	2.500	-3.000	-6.577	
27	Standaard	-	Carthesisch	3.750	-3.000	-6.896	
28	Standaard	-	Carthesisch	-1.250	3.000	-6.259	
29	Standaard	-	Carthesisch	-2.500	3.000	-6.577	
30	Standaard	-	Carthesisch	-3.750	3.000	-6.896	
31	Standaard	-	Carthesisch	1.250	3.000	-6.259	
32	Standaard	-	Carthesisch	2.500	3.000	-6.577	
33	Standaard	-	Carthesisch	3.750	3.000	-6.896	
34	Standaard	-	Carthesisch	0.000	6.100	-4.665	
35	Standaard	-	Carthesisch	-5.000	6.100	-5.940	
38	Standaard	-	Carthesisch	-5.000	3.100	-7.215	
39	Standaard	-	Carthesisch	0.000	3.100	-5.940	
40	Standaard	-	Carthesisch	5.000	3.100	-7.215	
42	Standaard	-	Carthesisch	-5.000	9.100	-7.215	
44	Standaard	-	Carthesisch	0.000	0.000	-4.665	
46	Standaard	-	Carthesisch	0.000	9.100	-5.940	
47	Standaard	-	Carthesisch	5.000	9.100	-7.215	
56	Standaard	-	Carthesisch	-1.250	3.100	-6.259	
57	Standaard	-	Carthesisch	-2.500	3.100	-6.577	
58	Standaard	-	Carthesisch	-3.750	3.100	-6.896	
59	Standaard	-	Carthesisch	1.250	3.100	-6.259	
66	Standaard	-	Carthesisch	2.500	3.100	-6.577	
67	Standaard	-	Carthesisch	3.750	3.100	-6.896	
68	Standaard	-	Carthesisch	-1.250	9.100	-6.259	
69	Standaard	-	Carthesisch	-2.500	9.100	-6.577	
70	Standaard	-	Carthesisch	-3.750	9.100	-6.896	
71	Standaard	-	Carthesisch	1.250	9.100	-6.259	
72	Standaard	-	Carthesisch	2.500	9.100	-6.577	
73	Standaard	-	Carthesisch	3.750	9.100	-6.896	
153	Standaard	-	Carthesisch	0.000	6.100	-4.300	
158	Standaard	-	Carthesisch	0.000	0.000	-4.300	
164	Standaard	-	Carthesisch	5.000	6.100	-5.940	
165	Standaard	-	Carthesisch	0.625	6.100	-4.824	
166	Standaard	-	Carthesisch	1.250	6.100	-4.984	
167	Standaard	-	Carthesisch	1.875	6.100	-5.143	
168	Standaard	-	Carthesisch	2.500	6.100	-5.302	
169	Standaard	-	Carthesisch	3.125	6.100	-5.462	
170	Standaard	-	Carthesisch	3.750	6.100	-5.621	
171	Standaard	-	Carthesisch	4.375	6.100	-5.781	
179	Standaard	-	Carthesisch	-0.625	6.100	-4.824	
180	Standaard	-	Carthesisch	-1.250	6.100	-4.984	
181	Standaard	-	Carthesisch	-1.875	6.100	-5.143	
182	Standaard	-	Carthesisch	-2.500	6.100	-5.302	
183	Standaard	-	Carthesisch	-3.125	6.100	-5.462	
184	Standaard	-	Carthesisch	-3.750	6.100	-5.621	
185	Standaard	-	Carthesisch	-4.375	6.100	-5.781	
186	Standaard	-	Carthesisch	-0.625	0.000	-4.824	
187	Standaard	-	Carthesisch	-1.250	0.000	-4.984	
188	Standaard	-	Carthesisch	-1.875	0.000	-5.143	
189	Standaard	-	Carthesisch	-2.500	0.000	-5.302	
190	Standaard	-	Carthesisch	-3.125	0.000	-5.462	
191	Standaard	-	Carthesisch	-3.750	0.000	-5.621	
192	Standaard	-	Carthesisch	-4.375	0.000	-5.781	
209	Standaard	-	Carthesisch	0.625	0.000	-4.824	
210	Standaard	-	Carthesisch	1.250	0.000	-4.984	
211	Standaard	-	Carthesisch	1.875	0.000	-5.143	
212	Standaard	-	Carthesisch	2.500	0.000	-5.302	
213	Standaard	-	Carthesisch	3.125	0.000	-5.462	
214	Standaard	-	Carthesisch	3.750	0.000	-5.621	
215	Standaard	-	Carthesisch	4.375	0.000	-5.781	
224	Standaard	-	Carthesisch	0.000	0.551	-4.899	
225	Standaard	-	Carthesisch	0.000	1.151	-5.154	

1.1 KNOPEN

Knoop No.	Knooptype	Reference Node	Coordinate System	Knoopcoördinaten X [m]	Y [m]	Z [m]	Opm.
226	Standaard	-	Carthesisch	0.000	1.751	-5.409	
227	Standaard	-	Carthesisch	0.000	2.351	-5.664	
228	Standaard	-	Carthesisch	0.000	-0.551	-4.899	
229	Standaard	-	Carthesisch	0.000	-1.151	-5.154	
230	Standaard	-	Carthesisch	0.000	-1.751	-5.409	
231	Standaard	-	Carthesisch	0.000	-2.351	-5.664	
240	Standaard	-	Carthesisch	0.000	2.946	-5.917	
241	Standaard	-	Carthesisch	0.000	-2.946	-5.917	
242	Standaard	-	Carthesisch	-4.964	0.000	-5.931	
243	Standaard	-	Carthesisch	4.964	0.000	-5.931	
244	Standaard	-	Carthesisch	0.000	3.154	-5.917	
245	Standaard	-	Carthesisch	0.000	9.046	-5.917	
246	Standaard	-	Carthesisch	4.964	6.100	-5.931	
247	Standaard	-	Carthesisch	-4.964	6.100	-5.931	
248	Standaard	-	Carthesisch	0.000	3.050	-5.940	
249	Standaard	-	Carthesisch	-5.000	3.050	-7.215	
250	Standaard	-	Carthesisch	5.000	3.050	-7.215	

KNOOPNUMMERING

Knoopnummering

Isometrisch

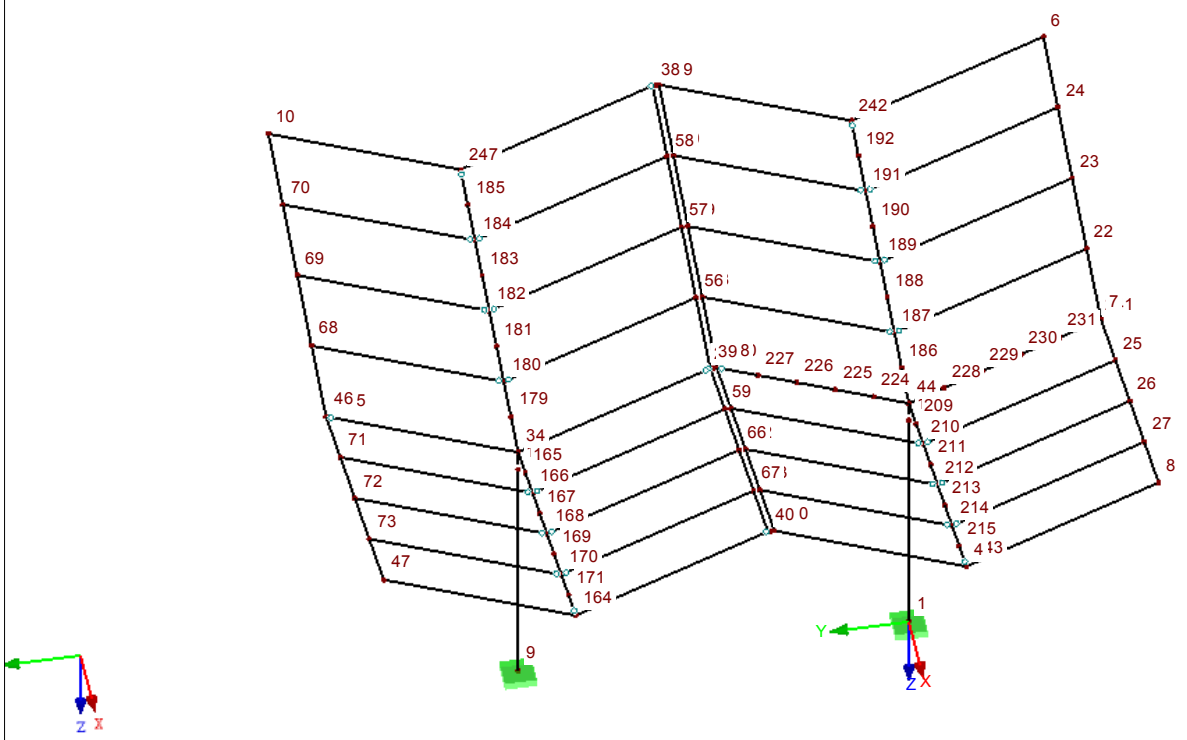

1.2 LIJNEN

Lijn No.	Lijntype	Knopen No.	Lijnlengte L [m]		Opm.
1	Polylijn	1,158	4.300	Z	
2	Polylijn	44,3	5.160	XZ	
3	Polylijn	44,4	5.160	XZ	
4	Polylijn	7,22	1.290	XZ	
6	Polylijn	3,6	3.260	YZ	
7	Polylijn	7,25	1.290	XZ	
8	Polylijn	4,8	3.260	YZ	
9	Polylijn	12,28	1.290	XZ	
11	Polylijn	3,11	3.260	YZ	
12	Polylijn	12,31	1.290	XZ	
13	Polylijn	4,13	3.260	YZ	
18	Polylijn	191,24	3.260	YZ	
19	Polylijn	189,23	3.260	YZ	
20	Polylijn	187,22	3.260	YZ	
21	Polylijn	210,25	3.260	YZ	
22	Polylijn	212,26	3.260	YZ	
23	Polylijn	214,27	3.260	YZ	
24	Polylijn	191,30	3.260	YZ	

1.2 LIJNEN

Lijn No.	Lijntype	Knopen No.	Lijnlengte L [m]		Opm.
25	Polylijn	189,29	3.260	YZ	
26	Polylijn	187,28	3.260	YZ	
27	Polylijn	210,31	3.260	YZ	
28	Polylijn	212,32	3.260	YZ	
29	Polylijn	214,33	3.260	YZ	
31	Polylijn	9,153	4.300	Z	
32	Polylijn	34,35	5.160	XZ	
34	Polylijn	39,56	1.290	XZ	
36	Polylijn	35,38	3.260	YZ	
37	Polylijn	39,59	1.290	XZ	
38	Polylijn	164,40	3.260	YZ	
39	Polylijn	46,68	1.290	XZ	
41	Polylijn	35,42	3.260	YZ	
42	Polylijn	46,71	1.290	XZ	
43	Polylijn	164,47	3.260	YZ	
48	Polylijn	184,58	3.260	YZ	
49	Polylijn	182,57	3.260	YZ	
50	Polylijn	180,56	3.260	YZ	
51	Polylijn	166,59	3.260	YZ	
52	Polylijn	168,66	3.260	YZ	
53	Polylijn	170,67	3.260	YZ	
54	Polylijn	184,70	3.260	YZ	
55	Polylijn	182,69	3.260	YZ	
56	Polylijn	180,68	3.260	YZ	
57	Polylijn	166,71	3.260	YZ	
58	Polylijn	168,72	3.260	YZ	
59	Polylijn	170,73	3.260	YZ	
65	Polylijn	22,23	1.290	XZ	
66	Polylijn	23,24	1.290	XZ	
67	Polylijn	24,6	1.290	XZ	
68	Polylijn	39,248	0.050	Y	
72	Polylijn	38,249	0.050	Y	
76	Polylijn	40,250	0.050	Y	
77	Polylijn	25,26	1.290	XZ	
78	Polylijn	26,27	1.290	XZ	
79	Polylijn	27,8	1.290	XZ	
80	Polylijn	28,29	1.290	XZ	
81	Polylijn	29,30	1.290	XZ	
82	Polylijn	30,11	1.290	XZ	
83	Polylijn	31,32	1.290	XZ	
84	Polylijn	32,33	1.290	XZ	
85	Polylijn	33,13	1.290	XZ	
92	Polylijn	56,57	1.290	XZ	
93	Polylijn	57,58	1.290	XZ	
94	Polylijn	58,38	1.290	XZ	
95	Polylijn	59,66	1.290	XZ	
96	Polylijn	66,67	1.290	XZ	
97	Polylijn	67,40	1.290	XZ	
98	Polylijn	68,69	1.290	XZ	
99	Polylijn	69,70	1.290	XZ	
100	Polylijn	70,42	1.290	XZ	
101	Polylijn	71,72	1.290	XZ	
102	Polylijn	72,73	1.290	XZ	
103	Polylijn	73,47	1.290	XZ	
179	Polylijn	153,34	0.365	Z	
180	Polylijn	34,46	3.260	YZ	
181	Polylijn	34,39	3.260	YZ	
182	Polylijn	44,12	3.260	YZ	
183	Polylijn	44,7	3.260	YZ	
184	Polylijn	158,44	0.365	Z	
189	Polylijn	34,164	5.160	XZ	nieuwe halve lange ligger
190	Polylijn	248,12	0.050	Y	
191	Polylijn	249,11	0.050	Y	
192	Polylijn	250,13	0.050	Y	

LIJNNUMMERING

Lijnnummering — Isometrisch

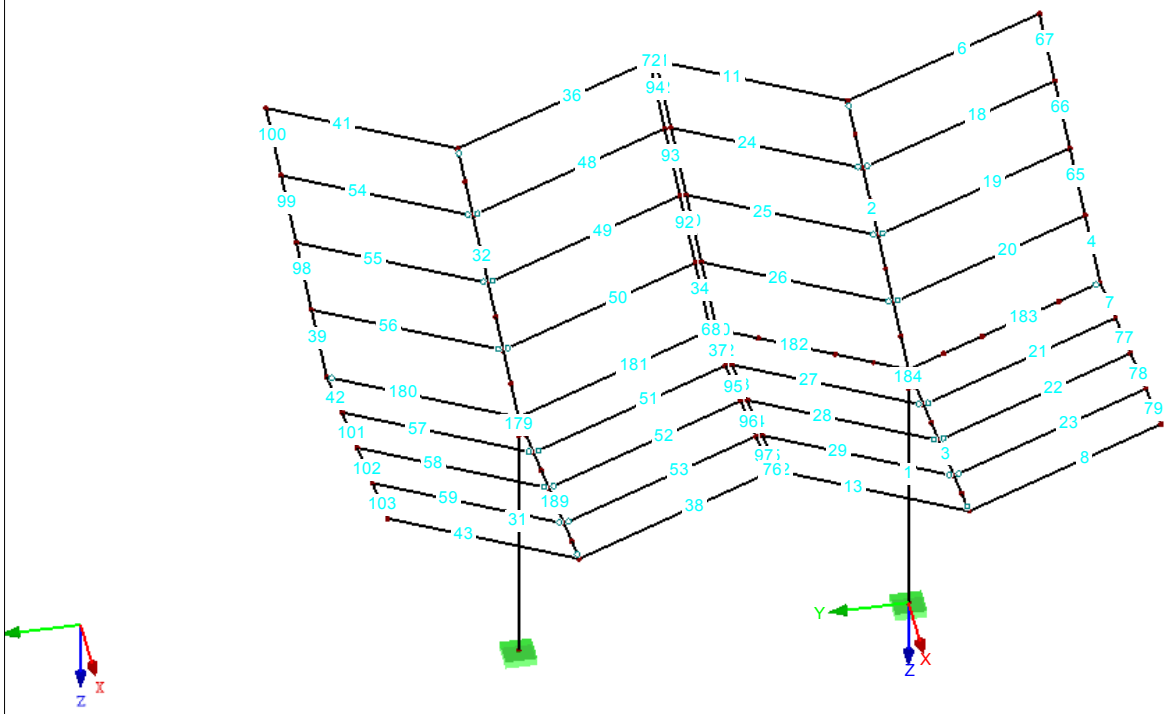

1.3 MATERIALEN

Matl. No.	Modulus E [N/mm²]	Modulus G [N/mm²]	Coëff. v. Poisson ν [-]	Vol. gewicht γ [kN/m³]	Therm. uitz. α [1/°C]	Materiaalfactor γ_M [-]	Materiaal Model
3	Gelamineerd hout GL28h | DIN 1052:2008-12						
	12600.0	780.0	7.077	5.00	5.00E-06	1.30	Isotroop Lineair Elastisch
5	Staal S 355 | DIN EN 1993-1-1:2010-12						
	210000.0	81000.0	0.296	78.50	1.20E-05	1.00	Isotroop Lineair Elastisch

1.7 STEUNPUNTEN

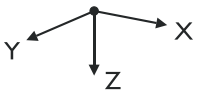

Stnpnt. No.	Knopen No.	Assenstelsel	Kolom in Z	Randvoorwaarden u_X	u_Y	u_Z	φ_X	φ_Y	φ_Z
3	1,9	Globaal X,Y,Z	☐	☒	☒	☒	☒	☒	☒

1.13 DOORSNEDES

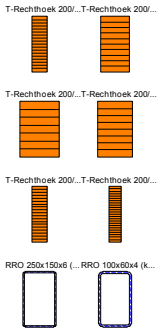

Sneden No.	Matl. No.	J [cm⁴] / A [cm²]	I_y [cm⁴] / A_y [cm²]	I_z [cm⁴] / A_z [cm²]	Hoofdassen α [°]	Rotatie α' [°]	Globale maatvoering [mm] Breedte b	Hoogte h
1	T-Rechthoek 200/730							
	3	161082.30	648361.75	48666.67	0.00	0.00	200.0	730.0
		1460.00	1216.67	1216.67				
3	T-Rechthoek 200/380							
	3	67946.14	91453.34	25333.33	0.00	0.00	200.0	380.0
		760.00	633.33	633.33				
4	T-Rechthoek 200/280							
	3	41788.59	36586.67	18666.67	0.00	0.00	200.0	280.0
		560.00	466.67	466.67				
5	T-Rechthoek 200/320							
	3	52156.51	54613.34	21333.33	0.00	0.00	200.0	320.0
		640.00	533.33	533.33				
13	T-Rechthoek 200/760							
	3	169079.97	731626.69	50666.67	0.00	0.00	200.0	760.0
		1520.00	1266.67	1266.67				
14	T-Rechthoek 200/960							
	3	222405.22	1474560.13	64000.00	0.00	0.00	200.0	960.0

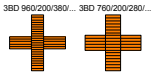

1.13 DOORSNEDES

Sneden No.	Matl. No.	J [cm⁴] / A [cm²]	I_y [cm⁴] / A_y [cm²]	I_z [cm⁴] / A_z [cm²]	Hoofdassen α [°]	Rotatie α' [°]	Globale maatvoering [mm] Breedte b	Hoogte h
		1920.00	1600.00	1600.00				
15	RRO 250x150x6 (koudgevormd)							
	5	3886.00	3886.00	1768.00	0.00	0.00	150.0	250.0
		45.60	12.49	26.58				
17	RRO 100x60x4 (koudgevormd)							
	5	156.00	153.00	68.70	0.00	0.00	60.0	100.0
		11.70	3.25	6.99				
18	3BD 960/200/380/200							
	3	501198.13	1525226.75	1525226.68	0.00	0.00	960.0	960.0
		3440.00	1905.10	1905.10				
19	3BD 760/200/280/200							
	3	392502.41	768960.06	768960.01	0.00	0.00	760.0	760.0
		2640.00	1588.04	1588.04				

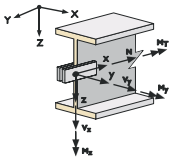

1.14 STAAFEINDSCHARNIEREN

Vrijgave No.	Referentie Systeem	Normaal-/ Afschuifscharnier of Veer[kN/m] u_x	u_y	u_z	Momentscharnier of veer[kNm/rad] φ_x	φ_y	φ_z	Opm.
1	Lok. x,y,z	☐	☐	☐	☐	☒	☒	
6	Lok. x,y,z	☐	☐	☐	☒	☐	☒	
7	Lok. x,y,z	☐	☐	☐	☐	☒	☒	
8	Lok. x,y,z	☐	☐	☐	☐	☒	☒	
9	Lok. x,y,z	☐	☐	☐	☐	☒	☒	
10	Lok. x,y,z	☐	☐	☒	☐	☐	☐	
11	Lok. x,y,z	☐	☐	☐	☐	☒	☐	
12	Lok. x,y,z	☐	☐	☐	☐	☐	☒	
13	Lok. x,y,z	☐	☐	☐	☐	☒	☒	

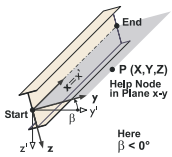

1.17 STAVEN

Stf. No.	Lijn No.	Staaf	Rotatie Type	β [°]	Doorsnede Begin	Einde	Scharnier No. Begin	Einde	Exc. No.	Deel No.	Lengte L [m]	
3	1	Ligger	Hoek	0.00	18	19	-	-	-	-	Lineair	Z
10	4	Ligger	Knoop	44 / x-y	15	15	-	-	-	-	-	XZ
11	6	Ligger	Knoop	44 / x-y	15	15	-	-	-	-	-	YZ
12	7	Ligger	Knoop	44 / x-y	15	15	-	-	-	-	-	XZ
13	8	Ligger	Knoop	44 / x-y	15	15	-	-	-	-	-	YZ
14	9	Ligger	Knoop	44 / x-y	15	15	-	-	-	-	-	XZ
15	11	Ligger	Knoop	44 / x-y	15	15	-	-	-	-	-	YZ
16	12	Ligger	Knoop	44 / x-y	15	15	-	-	-	-	-	XZ
17	13	Ligger	Knoop	44 / x-y	15	15	-	-	-	-	-	YZ
18	18	Ligger	Knoop	23 / x-y	17	17	11	-	-	-	-	YZ
19	19	Ligger	Knoop	44 / x-y	17	17	11	-	-	-	-	YZ
20	20	Ligger	Knoop	44 / x-y	17	17	11	-	-	-	-	YZ
21	21	Ligger	Knoop	44 / x-y	17	17	11	-	-	-	-	YZ
22	22	Ligger	Knoop	44 / x-y	17	17	11	-	-	-	-	YZ
23	23	Ligger	Knoop	44 / x-y	17	17	11	-	-	-	-	YZ
24	24	Ligger	Knoop	44 / x-y	17	17	11	-	-	-	-	YZ
25	25	Ligger	Knoop	44 / x-y	17	17	11	-	-	-	-	YZ
26	26	Ligger	Knoop	44 / x-y	17	17	11	-	-	-	-	YZ
27	27	Ligger	Knoop	44 / x-y	17	17	11	-	-	-	-	YZ
28	28	Ligger	Knoop	44 / x-y	17	17	11	-	-	-	-	YZ
29	29	Ligger	Knoop	44 / x-y	17	17	11	-	-	-	-	YZ
32	31	Ligger	Hoek	0.00	18	19	-	-	-	-	Lineair	Z
39	34	Ligger	Knoop	34 / x-y	15	15	-	-	-	-	-	XZ
40	36	Ligger	Knoop	34 / x-y	15	15	-	-	-	-	-	YZ
41	37	Ligger	Knoop	34 / x-y	15	15	-	-	-	-	-	XZ
42	38	Ligger	Knoop	34 / x-y	15	15	-	-	-	-	-	YZ
43	39	Ligger	Knoop	34 / x-y	15	15	-	-	-	-	-	XZ
44	41	Ligger	Knoop	34 / x-y	15	15	-	-	-	-	-	YZ
45	42	Ligger	Knoop	34 / x-y	15	15	-	-	-	-	-	XZ
46	43	Ligger	Knoop	34 / x-y	15	15	-	-	-	-	-	YZ
47	48	Ligger	Knoop	34 / x-y	17	17	11	-	-	-	-	YZ
48	49	Ligger	Knoop	34 / x-y	17	17	11	-	-	-	-	YZ
49	50	Ligger	Knoop	34 / x-y	17	17	11	-	-	-	-	YZ
50	51	Ligger	Knoop	34 / x-y	17	17	11	-	-	-	-	YZ
51	52	Ligger	Knoop	34 / x-y	17	17	11	-	-	-	-	YZ
52	53	Ligger	Knoop	34 / x-y	17	17	11	-	-	-	-	YZ
53	54	Ligger	Knoop	34 / x-y	17	17	11	-	-	-	-	YZ
54	55	Ligger	Knoop	34 / x-y	17	17	11	-	-	-	-	YZ
55	56	Ligger	Knoop	34 / x-y	17	17	11	-	-	-	-	YZ
56	57	Ligger	Knoop	34 / x-y	17	17	11	-	-	-	-	YZ
57	58	Ligger	Knoop	34 / x-y	17	17	11	-	-	-	-	YZ
58	59	Ligger	Knoop	34 / x-y	17	17	11	-	-	-	-	YZ
59	68	Koppeling R-H	Hoek	0.00	0	0	-	-		-	-	Y
66	65	Ligger	Knoop	44 / x-y	15	15	-	-	-	-	-	XZ
67	66	Ligger	Knoop	44 / x-y	15	15	-	-	-	-	-	XZ
68	67	Ligger	Knoop	44 / x-y	15	15	-	-	-	-	-	XZ
72	72	Koppeling R-H	Hoek	0.00	0	0	-	-		-	-	Y
76	76	Koppeling R-H	Hoek	0.00	0	0	-	-		-	-	Y
77	77	Ligger	Knoop	44 / x-y	15	15	-	-	-	-	-	XZ
78	78	Ligger	Knoop	44 / x-y	15	15	-	-	-	-	-	XZ
79	79	Ligger	Knoop	44 / x-y	15	15	-	-	-	-	-	XZ
80	80	Ligger	Knoop	44 / x-y	15	15	-	-	-	-	-	XZ
81	81	Ligger	Knoop	44 / x-y	15	15	-	-	-	-	-	XZ
82	82	Ligger	Knoop	44 / x-y	15	15	-	-	-	-	-	XZ
83	83	Ligger	Knoop	44 / x-y	15	15	-	-	-	-	-	XZ

1.17 STAVEN

Stf. No.	Lijn No.	Staaf	Rotatie Type	Rotatie β [°]	Doorsnede Begin	Doorsnede Einde	Scharnier No. Begin	Scharnier No. Einde	Exc. No.	Deel No.	Lengte L [m]	
84	84	Ligger	Knoop	44 / x-y	15	15	-	-	-	-	-	XZ
85	85	Ligger	Knoop	44 / x-y	15	15	-	-	-	-	-	XZ
92	92	Ligger	Knoop	34 / x-y	15	15	-	-	-	-	-	XZ
93	93	Ligger	Knoop	34 / x-y	15	15	-	-	-	-	-	XZ
94	94	Ligger	Knoop	34 / x-y	15	15	-	-	-	-	-	XZ
95	95	Ligger	Knoop	34 / x-y	15	15	-	-	-	-	-	XZ
96	96	Ligger	Knoop	34 / x-y	15	15	-	-	-	-	-	XZ
97	97	Ligger	Knoop	34 / x-y	15	15	-	-	-	-	-	XZ
98	98	Ligger	Knoop	34 / x-y	15	15	-	-	-	-	-	XZ
99	99	Ligger	Knoop	34 / x-y	15	15	-	-	-	-	-	XZ
100	100	Ligger	Knoop	34 / x-y	15	15	-	-	-	-	-	XZ
101	101	Ligger	Knoop	34 / x-y	15	15	-	-	-	-	-	XZ
102	102	Ligger	Knoop	34 / x-y	15	15	-	-	-	-	-	XZ
103	103	Ligger	Knoop	34 / x-y	15	15	-	-	-	-	-	XZ
180	179	Koppeling R-R	Hoek	0.00	0	0	-	-		-	-	Z
181	180	Ligger	Hoek	0.00	1	5	-	13	-	-	Lineair	YZ
182	181	Ligger	Hoek	0.00	1	5	-	13	-	-	Lineair	YZ
183	182	Ligger	Hoek	0.00	1	5	-	13	-	-	Lineair	YZ
184	183	Ligger	Hoek	0.00	1	5	-	13	-	-	Lineair	YZ
185	184	Koppeling R-R	Hoek	0.00	0	0	-	-		-	-	Z
189	189	Ligger	Hoek	0.00	1	5	-	13	-	-	Lineair	XZ
198	32	Ligger	Hoek	0.00	1	5	-	13	-	-	Lineair	XZ
199	2	Ligger	Hoek	0.00	1	5	-	13	-	-	Lineair	XZ
200	3	Ligger	Hoek	0.00	1	5	-	13	-	-	Lineair	XZ
239	190	Koppeling R-R	Hoek	0.00	0	0	-	-		-	-	Y
240	191	Koppeling R-R	Hoek	0.00	0	0	-	-		-	-	Y
241	192	Koppeling R-R	Hoek	0.00	0	0	-	-		-	-	Y

STAAFNUMMERING

Staafnummering | Isometrisch

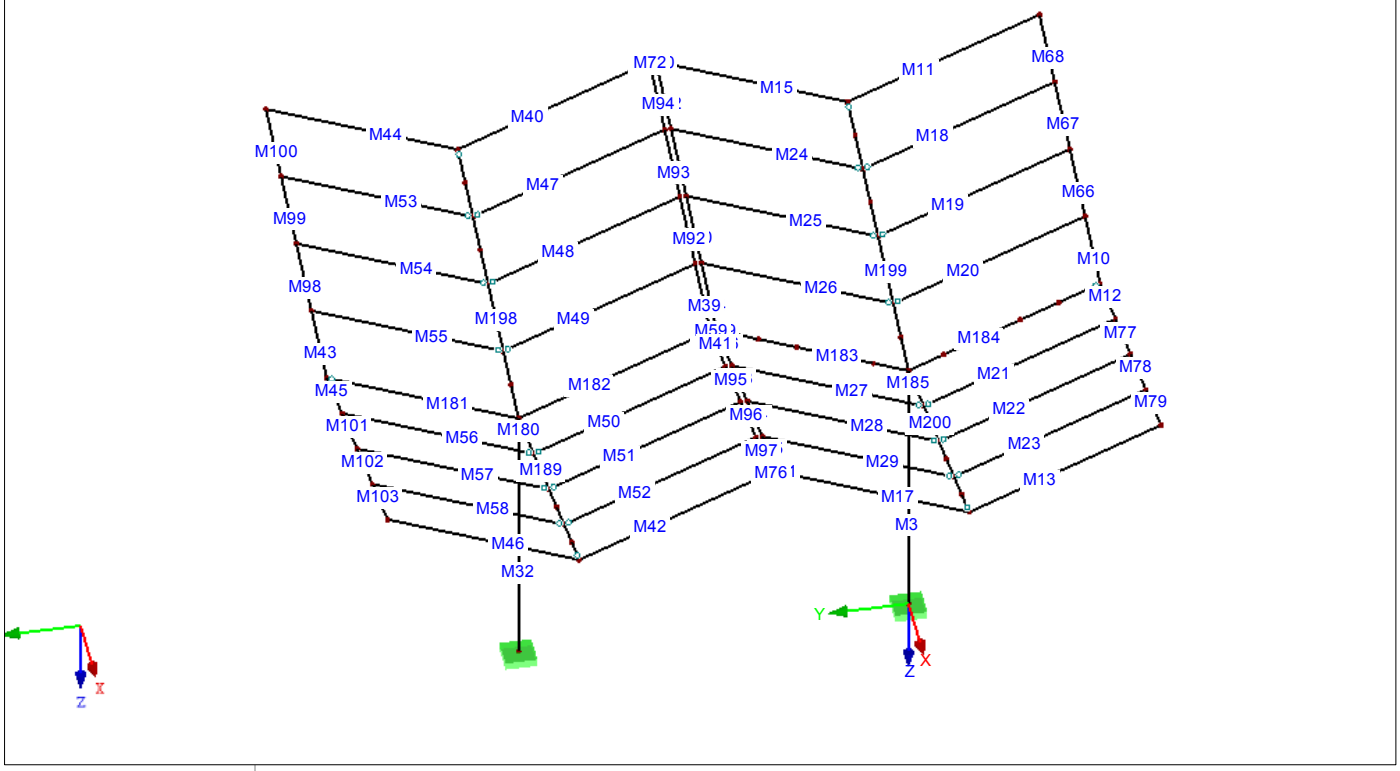

1.21 STAAFVERZAMELINGEN

Staafverz No.	Staafverzameling Omschrijving	Type	Staaf No.	Lengte [m]	Opm.
1	Doorgaande staven 1	Doorg. staaf	43,98-100	5.160	
2	Doorgaande staven 2	Doorg. staaf	45,101-103	5.160	
3	Doorgaande staven 3	Doorg. staaf	39,92-94	5.160	
4	Doorgaande staven 4	Doorg. staaf	41,95-97	5.160	
5	Doorgaande staven 5	Doorg. staaf	14,80-82	5.160	
6	Doorgaande staven 6	Doorg. staaf	16,83-85	5.160	
7	Doorgaande staven 7	Doorg. staaf	10,66-68	5.160	
8	Doorgaande staven 8	Doorg. staaf	12,77-79	5.160	

MODEL

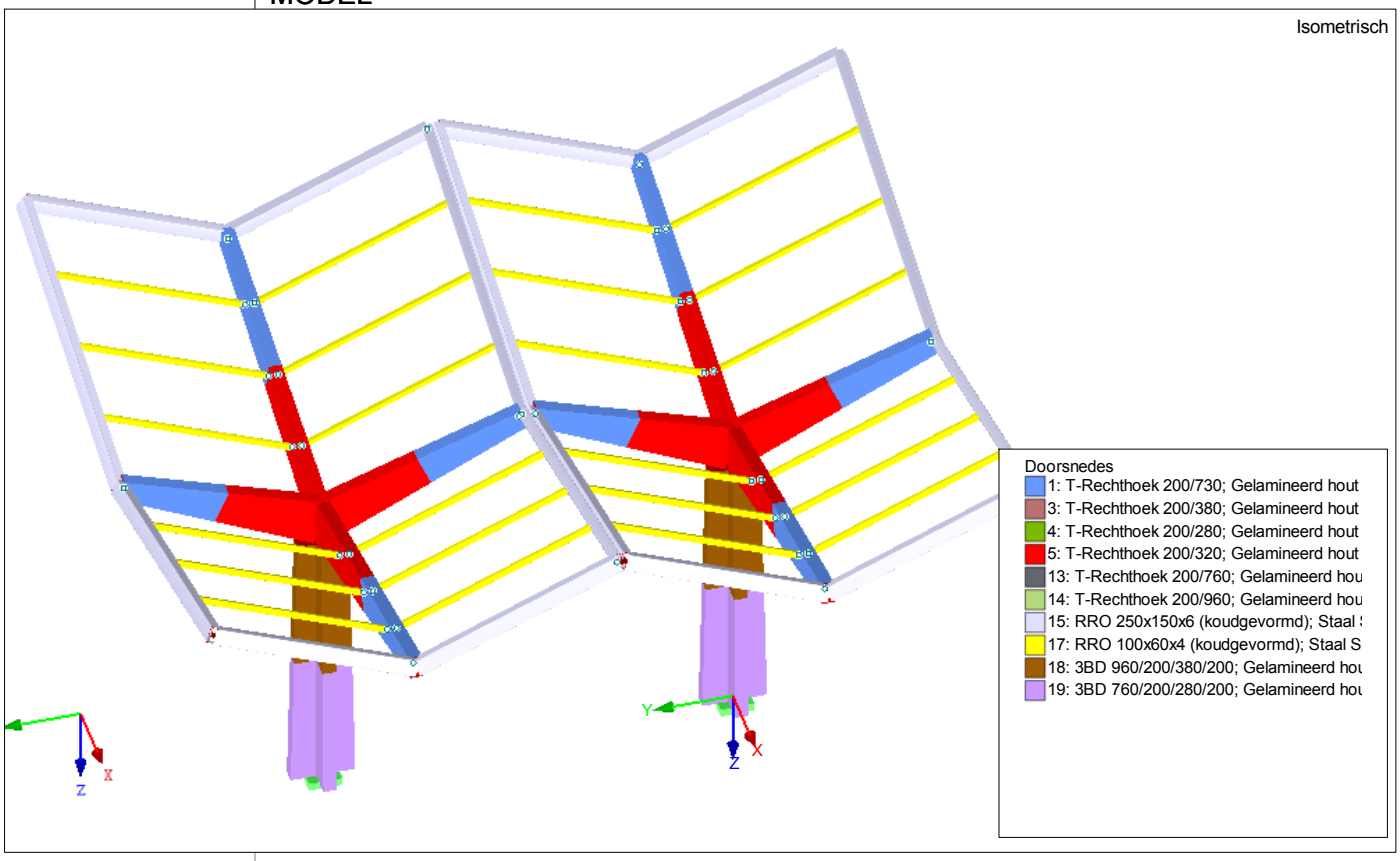
Isometrisch
Doorsnedes
1: T-Rechthoek 200/730; Gelamineerd hout
3: T-Rechthoek 200/380; Gelamineerd hout
4: T-Rechthoek 200/280; Gelamineerd hout
5: T-Rechthoek 200/320; Gelamineerd hout
13: T-Rechthoek 200/760; Gelamineerd hou
14: T-Rechthoek 200/960; Gelamineerd hou
15: RRO 250x150x6 (koudgevormd); Staal S
17: RRO 100x60x4 (koudgevormd); Staal S
18: 3BD 960/200/380/200; Gelamineerd hou
19: 3BD 760/200/280/200; Gelamineerd hou
Z
X
Y
Z
X

2.1 BELASTINGSGEVALLEN

Bel. Geval	BG omschrijving	EN 1990 | NEN:2011 Actiecategorie	Eigen gewicht - Factor in richting Actief	X	Y	Z
BG1	Eigen gewicht	Blijvend	☒	0.000	0.000	1.000
BG2	Permanente belasting	Blijvend	☐			
BG3	Sneeuwbelasting	Sneeuw (H ≤ 1000 m a.s.l.)	☐			
BG4	Windbelasting vol neerwaarts	Wind	☐			
BG5	Windbelasting vol opwaarts	Wind	☐			
BG6	Wind van links, aangeblazen vlak	Wind	☐			
BG7	Wind van boven, aangeblazen vlak	Wind	☐			
BG8	Windbelasting half neerwaarts	Wind	☐			
BG9	Windbelasting half2 neerwaarts	Wind	☐			
BG10	Windbelasting half opwaarts	Wind	☐			
BG11	Windbelasting half2 opwaarts	Wind	☐			
BG12	Personenbelasting	Opgelegd - Categorie H: Daken	☐			

2.5 BELASTINGSCOMBINATIES

Last Combin.	Belastingscombinatie OS	Omschrijving	No.	Factor	Belastingsgeval	
BC1	ULS	PB+sneeuw	1	1.35	BG1	Eigen gewicht
			2	1.35	BG2	Permanente belasting
			3	1.50	BG3	Sneeuwbelasting
	PB+sneeuw					
BC2	ULS	max. wind neer + wi li + (sneeuw)mom	1	1.35	BG1	Eigen gewicht
			2	1.35	BG2	Permanente belasting
			3	0.90	BG3	Sneeuwbelasting
			4	1.50	BG4	Windbelasting vol neerwaarts
			5	1.50	BG6	Wind van links, aangeblazen vlak
	max. wind neer + wi li + (sneeuw)mom					
BC3		max.wind neer + wi bov + (sneeuw) mom	1	1.35	BG1	Eigen gewicht
			2	1.35	BG2	Permanente belasting
			3	0.90	BG3	Sneeuwbelasting
			4	1.50	BG4	Windbelasting vol neerwaarts
			5	1.50	BG7	Wind van boven, aangeblazen vlak
	max.wind neer + wi bov + (sneeuw) mom					
BC4		max.wind neer half + wi li + (sneeuw)mom	1	1.35	BG1	Eigen gewicht
			2	1.35	BG2	Permanente belasting
			3	0.90	BG3	Sneeuwbelasting
			4	1.50	BG8	Windbelasting half neerwaarts
			5	1.50	BG6	Wind van links, aangeblazen vlak
	max.wind neer half + wi li + (sneeuw)mom					
BC5		max.wind neer half + wi bov + (sneeuw)mom	1	1.35	BG1	Eigen gewicht
			2	1.35	BG2	Permanente belasting
			3	0.90	BG3	Sneeuwbelasting
			4	1.50	BG8	Windbelasting half neerwaarts
			5	1.50	BG7	Wind van boven, aangeblazen vlak
	max.wind neer half + wi bov + (sneeuw)mom					
BC6		max.wind neer half 2 + wi li + (sneeuw)mom	1	1.35	BG1	Eigen gewicht
			2	1.35	BG2	Permanente belasting
			3	0.90	BG3	Sneeuwbelasting
			4	1.50	BG9	Windbelasting half2 neerwaarts
			5	1.50	BG6	Wind van links, aangeblazen vlak
	max.wind neer half 2 + wi li + (sneeuw)mom					
BC7		max.wind neer half 2 + wi bov + (sneeuw)mom	1	1.35	BG1	Eigen gewicht
			2	1.35	BG2	Permanente belasting
			3	0.90	BG3	Sneeuwbelasting
			4	1.50	BG9	Windbelasting half2 neerwaarts
			5	1.50	BG7	Wind van boven, aangeblazen vlak
	max.wind neer half 2 + wi bov + (sneeuw)mom					
BC8		max. sneeuw + (wind neer + wi li)mom	1	1.35	BG1	Eigen gewicht
			2	1.35	BG2	Permanente belasting
			3	1.50	BG3	Sneeuwbelasting
			4	0.75	BG4	Windbelasting vol neerwaarts
			5	0.75	BG6	Wind van links, aangeblazen vlak
	max. sneeuw + (wind neer + wi li)mom					
BC9		max.sneeuw + (wind neer + wi bov) mom	1	1.35	BG1	Eigen gewicht
			2	1.35	BG2	Permanente belasting
			3	1.50	BG3	Sneeuwbelasting
			4	0.75	BG4	Windbelasting vol neerwaarts
			5	0.75	BG7	Wind van boven, aangeblazen vlak
	max.sneeuw + (wind neer + wi bov) mom					
BC10		max.sneeuw + (wind neer half + wi li)mom	1	1.35	BG1	Eigen gewicht
			2	1.35	BG2	Permanente belasting
			3	1.50	BG3	Sneeuwbelasting
			4	0.75	BG8	Windbelasting half neerwaarts
			5	0.75	BG6	Wind van links, aangeblazen vlak
	max.sneeuw + (wind neer half + wi li)mom					
BC11		max.sneeuw + (wind neer half + wi bov)mom	1	1.35	BG1	Eigen gewicht
			2	1.35	BG2	Permanente belasting
			3	1.50	BG3	Sneeuwbelasting
			4	0.75	BG8	Windbelasting half neerwaarts
			5	0.75	BG7	Wind van boven, aangeblazen vlak
	max.sneeuw + (wind neer half + wi bov)mom					
BC12		max.sneeuw+(wind neer half 2+wi li)mom	1	1.35	BG1	Eigen gewicht
			2	1.35	BG2	Permanente belasting
			3	1.50	BG3	Sneeuwbelasting
			4	0.75	BG9	Windbelasting half2 neerwaarts
			5	0.75	BG6	Wind van links, aangeblazen vlak
	max.sneeuw+(wind neer half 2+wi li)mom					
BC13		max.sneeuw+(wind neer half 2 + wi bov)mom	1	1.35	BG1	Eigen gewicht
			2	1.35	BG2	Permanente belasting
			3	1.50	BG3	Sneeuwbelasting

2.5 BELASTINGSCOMBINATIES

Last Combin.	Belastingscombinatie OS	Omschrijving	No.	Factor		Belastingsgeval
			4	0.75	BG9	Windbelasting half2 neerwaarts
			5	0.75	BG7	Wind van boven, aangeblazen vlak
	max.sneeuw+(wind neer half 2 + wi bov)mom					
BC14		max.wind opw + wi li	1	0.90	BG1	Eigen gewicht
			2	0.90	BG2	Permanente belasting
			3	1.50	BG5	Windbelasting vol opwaarts
			4	1.50	BG6	Wind van links, aangeblazen vlak
	max.wind opw + wi li					
BC15		max.wind opw + wi bov	1	0.90	BG1	Eigen gewicht
			2	0.90	BG2	Permanente belasting
			3	1.50	BG5	Windbelasting vol opwaarts
			4	1.50	BG7	Wind van boven, aangeblazen vlak
	max.wind opw + wi bov					
BC16		wind neer half + wi li	1	1.35	BG1	Eigen gewicht
			2	1.35	BG2	Permanente belasting
			3	1.50	BG8	Windbelasting half neerwaarts
			4	1.50	BG6	Wind van links, aangeblazen vlak
	wind neer half + wi li					
BC17		wind neer half + wi bov	1	1.35	BG1	Eigen gewicht
			2	1.35	BG2	Permanente belasting
			3	1.50	BG8	Windbelasting half neerwaarts
			4	1.50	BG7	Wind van boven, aangeblazen vlak
	wind neer half + wi bov					
BC18		wind neer half 2 + wi li	1	1.35	BG1	Eigen gewicht
			2	1.35	BG2	Permanente belasting
			3	1.50	BG9	Windbelasting half2 neerwaarts
			4	1.50	BG6	Wind van links, aangeblazen vlak
	wind neer half 2 + wi li					
BC19		wind neer half 2 + wi bov	1	1.35	BG1	Eigen gewicht
			2	1.35	BG2	Permanente belasting
			3	1.50	BG9	Windbelasting half2 neerwaarts
			4	1.50	BG7	Wind van boven, aangeblazen vlak
	wind neer half 2 + wi bov					
BC20		max.wind opw half + wi li	1	0.90	BG1	Eigen gewicht
			2	0.90	BG2	Permanente belasting
			3	1.50	BG10	Windbelasting half opwaarts
			4	1.50	BG6	Wind van links, aangeblazen vlak
	max.wind opw half + wi li					
BC21		max.wind opw half + wi bov	1	0.90	BG1	Eigen gewicht
			2	0.90	BG2	Permanente belasting
			3	1.50	BG10	Windbelasting half opwaarts
			4	1.50	BG7	Wind van boven, aangeblazen vlak
	max.wind opw half + wi bov					
BC22		max.wind opw half 2 + wi li	1	0.90	BG1	Eigen gewicht
			2	0.90	BG2	Permanente belasting
			3	1.50	BG11	Windbelasting half2 opwaarts
			4	1.50	BG6	Wind van links, aangeblazen vlak
	max.wind opw half 2 + wi li					
BC23		max.wind opw half 2 + wi bov	1	0.90	BG1	Eigen gewicht
			2	0.90	BG2	Permanente belasting
			3	1.50	BG11	Windbelasting half2 opwaarts
			4	1.50	BG7	Wind van boven, aangeblazen vlak
	max.wind opw half 2 + wi bov					
BC24		personen	1	1.35	BG1	Eigen gewicht
			2	1.35	BG2	Permanente belasting
			3	1.50	BG12	Personenbelasting
	personen					
BC25		karaktistiek PB+sneeuw	1	1.00	BG1	Eigen gewicht
			2	1.00	BG2	Permanente belasting
			3	1.00	BG3	Sneeuwbelasting
	PB+sneeuw					
BC26		max. wind neer + wi li + (sneeuw)mom	1	1.00	BG1	Eigen gewicht
			2	1.00	BG2	Permanente belasting
			3	0.60	BG3	Sneeuwbelasting
			4	1.00	BG4	Windbelasting vol neerwaarts
			5	1.00	BG6	Wind van links, aangeblazen vlak
	max. wind neer + wi li + (sneeuw)mom					
BC27		max.wind neer + wi bov + (sneeuw) mom	1	1.00	BG1	Eigen gewicht
			2	1.00	BG2	Permanente belasting
			3	0.60	BG3	Sneeuwbelasting
			4	1.00	BG4	Windbelasting vol neerwaarts
			5	1.00	BG7	Wind van boven, aangeblazen vlak
	max.wind neer + wi bov + (sneeuw) mom					
BC28		max.wind neer half + wi li + (sneeuw)mom	1	1.00	BG1	Eigen gewicht
			2	1.00	BG2	Permanente belasting
			3	0.60	BG3	Sneeuwbelasting
			4	1.00	BG8	Windbelasting half neerwaarts
			5	1.00	BG6	Wind van links, aangeblazen vlak
	max.wind neer half + wi li + (sneeuw)mom					
BC29		max.wind neer half + wi bov + (sneeuw)mom	1	1.00	BG1	Eigen gewicht
			2	1.00	BG2	Permanente belasting
			3	0.60	BG3	Sneeuwbelasting
			4	1.00	BG8	Windbelasting half neerwaarts
			5	1.00	BG7	Wind van boven, aangeblazen vlak
	max.wind neer half + wi bov + (sneeuw)mom					
BC30		max.wind neer half 2 + wi li + (sneeuw)mom	1	1.00	BG1	Eigen gewicht
			2	1.00	BG2	Permanente belasting
			3	0.60	BG3	Sneeuwbelasting
			4	1.00	BG9	Windbelasting half2 neerwaarts
			5	1.00	BG6	Wind van links, aangeblazen vlak
	max.wind neer half 2 + wi li + (sneeuw)mom					
BC31		max.wind neer half 2 + wi bov + (sneeuw)mom	1	1.00	BG1	Eigen gewicht

2.5 BELASTINGSCOMBINATIES

Last Combin.	Belastingscombinatie OS	Omschrijving	No.	Factor	Belastingsgeval	
			2	1.00	BG2	Permanente belasting
			3	0.60	BG3	Sneeuwbelasting
			4	1.00	BG9	Windbelasting half2 neerwaarts
			5	1.00	BG7	Wind van boven, aangeblazen vlak
	max.wind neer half 2 + wi bov + (sneeuw)mom					
BC32		max. sneeuw + (wind neer + wi li)mom	1	1.00	BG1	Eigen gewicht
			2	1.00	BG2	Permanente belasting
			3	1.00	BG3	Sneeuwbelasting
			4	0.50	BG4	Windbelasting vol neerwaarts
			5	0.50	BG6	Wind van links, aangeblazen vlak
	max. sneeuw + (wind neer + wi li)mom					
BC33		max.sneeuw + (wind neer + wi bov) mom	1	1.00	BG1	Eigen gewicht
			2	1.00	BG2	Permanente belasting
			3	1.00	BG3	Sneeuwbelasting
			4	0.50	BG4	Windbelasting vol neerwaarts
			5	0.50	BG7	Wind van boven, aangeblazen vlak
	max.sneeuw + (wind neer + wi bov) mom					
BC34		max.sneeuw + (wind neer half + wi li)mom	1	1.00	BG1	Eigen gewicht
			2	1.00	BG2	Permanente belasting
			3	1.00	BG3	Sneeuwbelasting
			4	0.50	BG8	Windbelasting half neerwaarts
			5	0.50	BG6	Wind van links, aangeblazen vlak
	max.sneeuw + (wind neer half + wi li)mom					
BC35		max.sneeuw + (wind neer half + wi bov)mom	1	1.00	BG1	Eigen gewicht
			2	1.00	BG2	Permanente belasting
			3	1.00	BG3	Sneeuwbelasting
			4	0.50	BG8	Windbelasting half neerwaarts
			5	0.50	BG7	Wind van boven, aangeblazen vlak
	max.sneeuw + (wind neer half + wi bov)mom					
BC36		max.sneeuw+(wind neer half 2+wi li)mom	1	1.00	BG1	Eigen gewicht
			2	1.00	BG2	Permanente belasting
			3	1.00	BG3	Sneeuwbelasting
			4	0.50	BG9	Windbelasting half2 neerwaarts
			5	0.50	BG6	Wind van links, aangeblazen vlak
	max.sneeuw+(wind neer half 2+wi li)mom					
BC37		max.sneeuw+(wind neer half 2 + wi bov)mom	1	1.00	BG1	Eigen gewicht
			2	1.00	BG2	Permanente belasting
			3	1.00	BG3	Sneeuwbelasting
			4	0.50	BG9	Windbelasting half2 neerwaarts
			5	0.50	BG7	Wind van boven, aangeblazen vlak
	max.sneeuw+(wind neer half 2 + wi bov)mom					
BC38		max.wind opw + wi li	1	1.00	BG1	Eigen gewicht
			2	1.00	BG2	Permanente belasting
			3	1.00	BG5	Windbelasting vol opwaarts
			4	1.00	BG6	Wind van links, aangeblazen vlak
	max.wind opw + wi li					
BC39		max.wind opw + wi bov	1	1.00	BG1	Eigen gewicht
			2	1.00	BG2	Permanente belasting
			3	1.00	BG5	Windbelasting vol opwaarts
			4	1.00	BG7	Wind van boven, aangeblazen vlak
	max.wind opw + wi bov					
BC40		wind neer half + wi li	1	1.00	BG1	Eigen gewicht
			2	1.00	BG2	Permanente belasting
			3	1.00	BG8	Windbelasting half neerwaarts
			4	1.00	BG6	Wind van links, aangeblazen vlak
	wind neer half + wi li					
BC41		wind neer half + wi bov	1	1.00	BG1	Eigen gewicht
			2	1.00	BG2	Permanente belasting
			3	1.00	BG8	Windbelasting half neerwaarts
			4	1.00	BG7	Wind van boven, aangeblazen vlak
	wind neer half + wi bov					
BC42		wind neer half 2 + wi li	1	1.00	BG1	Eigen gewicht
			2	1.00	BG2	Permanente belasting
			3	1.00	BG9	Windbelasting half2 neerwaarts
			4	1.00	BG6	Wind van links, aangeblazen vlak
	wind neer half 2 + wi li					
BC43		wind neer half 2 + wi bov	1	1.00	BG1	Eigen gewicht
			2	1.00	BG2	Permanente belasting
			3	1.00	BG9	Windbelasting half2 neerwaarts
			4	1.00	BG7	Wind van boven, aangeblazen vlak
	wind neer half 2 + wi bov					
BC44		max.wind opw half + wi li	1	1.00	BG1	Eigen gewicht
			2	1.00	BG2	Permanente belasting
			3	1.00	BG10	Windbelasting half opwaarts
			4	1.00	BG6	Wind van links, aangeblazen vlak
	max.wind opw half + wi li					
BC45		max.wind opw half + wi bov	1	1.00	BG1	Eigen gewicht
			2	1.00	BG2	Permanente belasting
			3	1.00	BG10	Windbelasting half opwaarts
			4	1.00	BG7	Wind van boven, aangeblazen vlak
	max.wind opw half + wi bov					
BC46		max.wind opw half 2 + wi li	1	1.00	BG1	Eigen gewicht
			2	1.00	BG2	Permanente belasting
			3	1.00	BG11	Windbelasting half2 opwaarts
			4	1.00	BG6	Wind van links, aangeblazen vlak
	max.wind opw half 2 + wi li					
BC47		max.wind opw half 2 + wi bov	1	1.00	BG1	Eigen gewicht
			2	1.00	BG2	Permanente belasting
			3	1.00	BG11	Windbelasting half2 opwaarts
			4	1.00	BG7	Wind van boven, aangeblazen vlak
	max.wind opw half 2 + wi bov					
BC48		personen	1	1.00	BG1	Eigen gewicht

2.5 BELASTINGSCOMBINATIES

Last Combin.	Belastingscombinatie OS	Omschrijving	No.	Factor	Belastingsgeval	
			2	1.00	BG2	Permanente belasting
			3	1.00	BG12	Personenbelasting
	personen					

2.7 RESULTAATCOMBINATIES

Result Combin	Omschrijving	Belasting
RC1	ULS omhullend	BC1 of tot BC24
RC2	SLS omhullend	BC30 of tot BC48
RC3	SLS omhullend+kruip	0.8*BG1/b + 0.8*BG2/b + RC2

BG2
Permanente belasting

3.15 GEGENEREERDE LASTEN BG2: Permanente belasting

No.	Belastingomschrijving					
1	Van Vlaklasten via vlak					
	Vlaklastrichting	Globaal gerelateerd aan echte vlak:		:	☒ ZL	
	Lasttoewijzingsbereik	☒ Volledig gesloten vlak				
	Lastverdelingstype:	☒ Gecombineerd				
	Vlaklast grootte	☒ Constant		:	0.26	kN/m²
	Grens van vlaklast vlak	Hoekknopen		:	8,4,44,7; 4,13,12,44,243; 7,44,3,6; 44,12,11,3	
		Aanwijzing		:	Elke rij in de lijst geeft een vlak weer	
	Gegenereerde totale belastingen in richting	Σ P Vlakken	X	:	0.000	kN
			Y	:	0.000	kN
			Z	:	17.612	kN
		ΣP Staven	X	:	0.000	kN
			Y	:	0.000	kN
			Z	:	17.612	kN
	Totale moment bij de oorsprong	Σ M Vlakken	X	:	0.000	kNm
			Y	:	0.000	kNm
			Z	:	0.000	kNm
		ΣM Staven	X	:	0.000	kNm
			Y	:	0.000	kNm
			Z	:	0.000	kNm
	Cellen geselecteerd voor genereren	Σ aantal cellen		:	16	
		Σ cel vlak		:	66.965	m²
	Converteren van Vlaklasten naar Staaf No.			:	10-29,66-68,77-85,183, 184,199,200	
2	Van Vlaklasten via vlak					
	Vlaklastrichting	Globaal gerelateerd aan echte vlak:		:	☒ ZL	
	Lasttoewijzingsbereik	☒ Volledig gesloten vlak				
	Lastverdelingstype:	☒ Gecombineerd				
	Vlaklast grootte	☒ Constant		:	0.26	kN/m²
	Grens van vlaklast vlak	Hoekknopen		:	40,164,34,39; 164,47,46,34; 34,46,42,35; 34,35,38,39	
		Aanwijzing		:	Elke rij in de lijst geeft een vlak weer	
	Gegenereerde totale belastingen in richting	Σ P Vlakken	X	:	0.000	kN
			Y	:	0.000	kN
			Z	:	17.612	kN
		ΣP Staven	X	:	0.000	kN
			Y	:	0.000	kN
			Z	:	17.612	kN
	Totale moment bij de oorsprong	Σ M Vlakken	X	:	107.432	kNm
			Y	:	0.000	kNm
			Z	:	0.000	kNm
		ΣM Staven	X	:	107.432	kNm
			Y	:	0.000	kNm
			Z	:	0.000	kNm
	Cellen geselecteerd voor genereren	Σ aantal cellen		:	16	
		Σ cel vlak		:	66.965	m²
	Converteren van Vlaklasten naar Staaf No.			:	39-58,92-103,181,182, 189,198	

BG2: PERMANENTE BELASTING

BG 2: Permanente belasting
Belastingen [kN/m^2]

Isometrisch

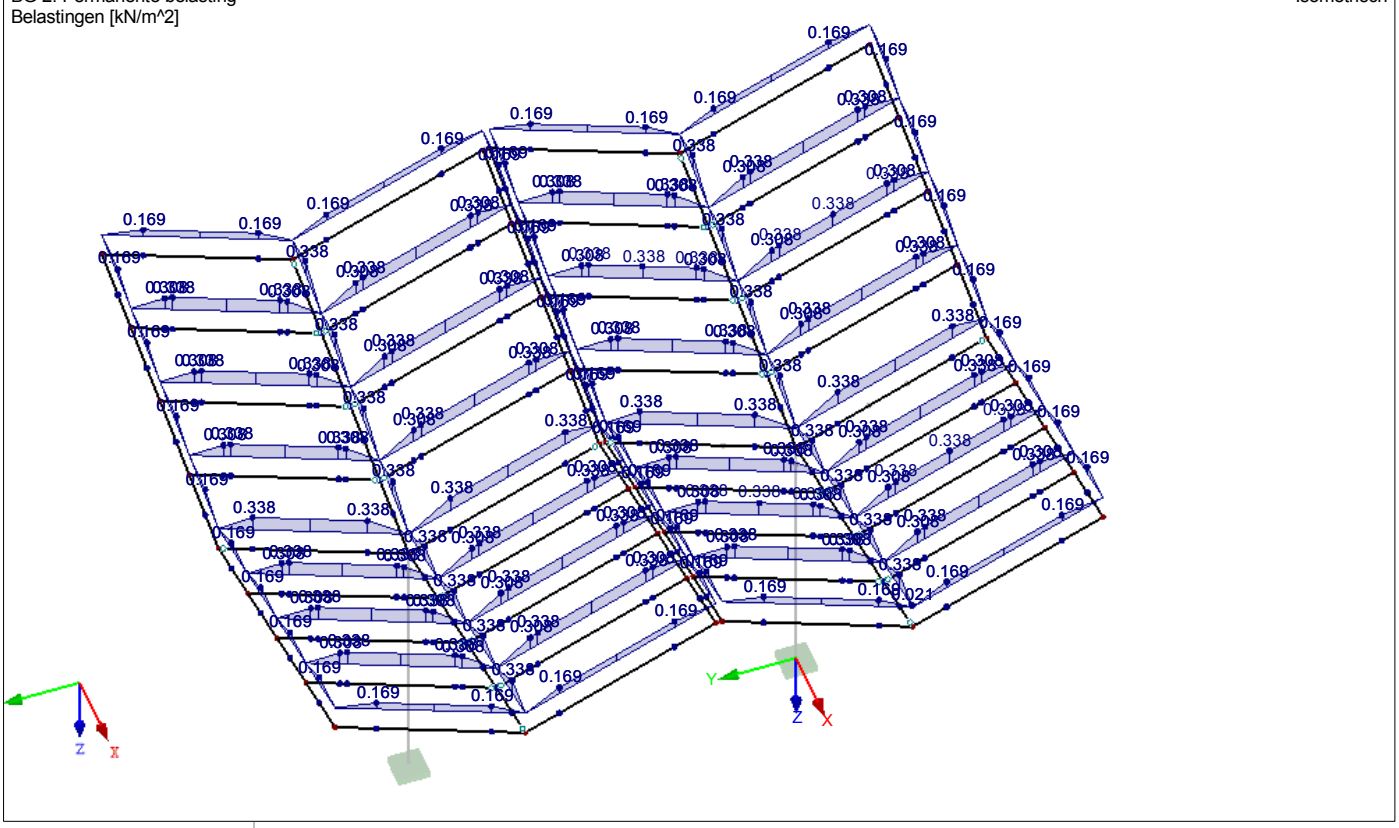

BG2: PERMANENTE BELASTING

BG 2: Permanente belasting
Belastingen [kN/m^2]

Isometrisch

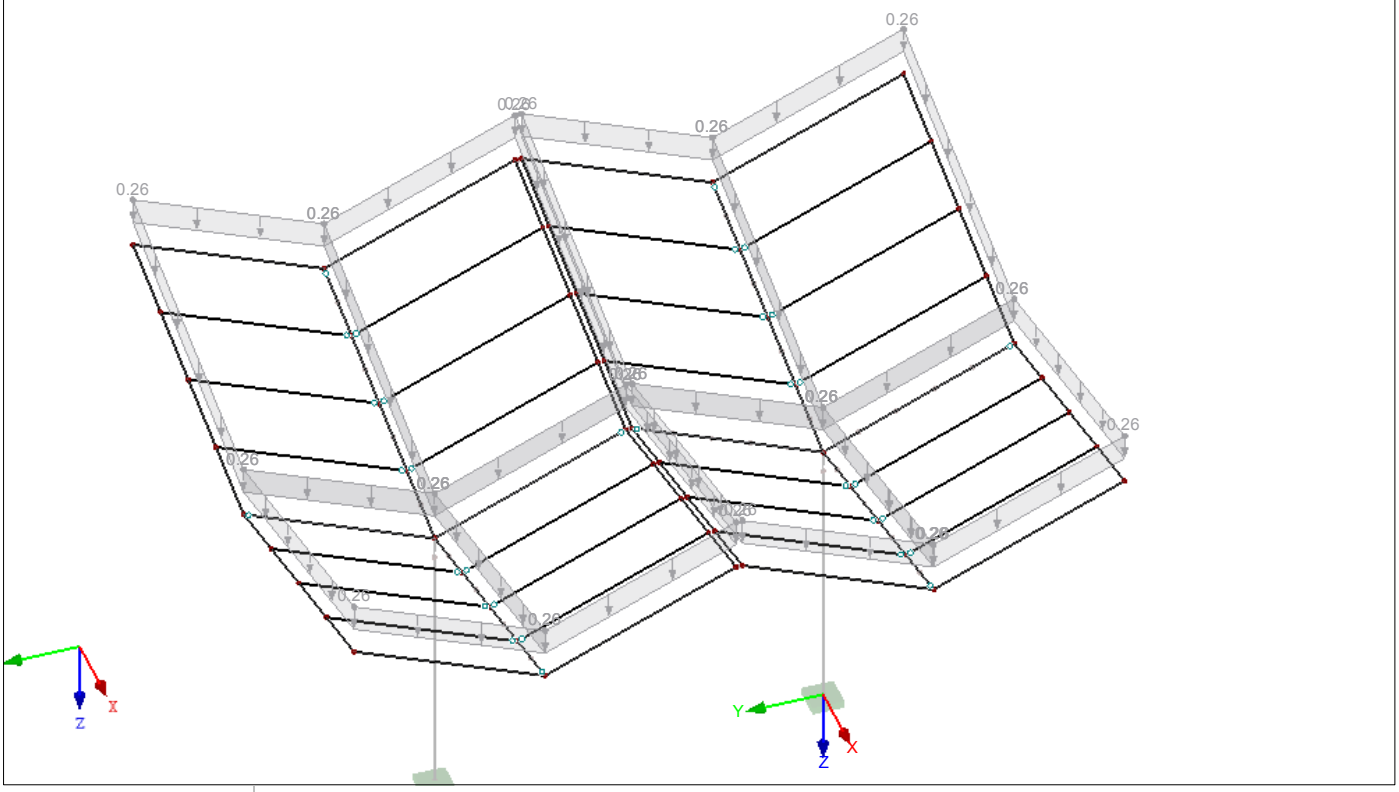

BG3
Sneeuwbelasting

3.15 GEGENEREERDE LASTEN

BG3: Sneeuwbelasting

No.	Belastingomschrijving					
1	Van Vlaklasten via vlak					
	Vlaklastrichting	Globaal gerelateerd aan geprojecteerde vlak:		:	☒ ZP	
	Lasttoewijzingsbereik	☒ Volledig gesloten vlak				
	Lastverdelingstype:	☒ Gecombineerd				
	Vlaklast grootte	☒ Variërend in	Z1	:	-7.22	m
			p1	:	1280.00	N/m²
			Z2	:	-5.94	m
			p2	:	1890.00	N/m²
			Z3	:	-4.66	m
			p3	:	2570.00	N/m²
	Grens van vlaklast vlak	Hoekknopen		:	40,164,34,39; 164,47,46,34; 34,46,42,35; 34,35,38,39	
		Aanwijzing		:	Elke rij in de lijst geeft een vlak weer	
	Gegenereerde totale belastingen in richting	Σ P Vlakken	X	:	0.000	kN
			Y	:	0.000	kN
			Z	:	114.100	kN
		ΣP Staven	X	:	0.000	kN
			Y	:	0.000	kN
			Z	:	114.103	kN
	Totale moment bij de oorsprong	Σ M Vlakken	X	:	696.010	kNm
			Y	:	0.000	kNm
			Z	:	0.000	kNm
		ΣM Staven	X	:	696.026	kNm
			Y	:	0.000	kNm
			Z	:	0.000	kNm
	Cellen geselecteerd voor genereren	Σ aantal cellen		:	16	
		Σ cel vlak		:	60.000	m²
	Converteren van Vlaklasten naar Staaf No.			:	39-58,92-103,181,182, 189,198	
3	Van Vlaklasten via vlak					
	Vlaklastrichting	Globaal gerelateerd aan geprojecteerde vlak:		:	☒ ZP	
	Lasttoewijzingsbereik	☒ Volledig gesloten vlak				
	Lastverdelingstype:	☒ Assen van Hoekprofielen				
	Vlaklast grootte	☒ Variërend in	Z1	:	-7.22	m
			p1	:	1280.00	N/m²
			Z2	:	-5.94	m
			p2	:	1890.00	N/m²
			Z3	:	-4.66	m
			p3	:	2570.00	N/m²
	Grens van vlaklast vlak	Hoekknopen		:	8,4,44,7; 4,13,12,44,243; 7,44,3,6; 44,12,11,3	
		Aanwijzing		:	Elke rij in de lijst geeft een vlak weer	
	Gegenereerde totale belastingen in richting	Σ P Vlakken	X	:	0.000	kN
			Y	:	0.000	kN
			Z	:	114.100	kN
		ΣP Staven	X	:	0.000	kN
			Y	:	0.000	kN
			Z	:	114.103	kN
	Totale moment bij de oorsprong	Σ M Vlakken	X	:	0.000	kNm
			Y	:	0.000	kNm
			Z	:	0.000	kNm
		ΣM Staven	X	:	0.000	kNm
			Y	:	0.000	kNm
			Z	:	0.000	kNm
	Cellen geselecteerd voor genereren	Σ aantal cellen		:	16	
		Σ cel vlak		:	60.000	m²
	Converteren van Vlaklasten naar Staaf No.			:	10-29,66-68,77-85,183, 184,199,200	

BG3: SNEEUWBELASTING

BG 3: Sneeuwbelasting
Belastingen [kN/m^2]

Isometrisch

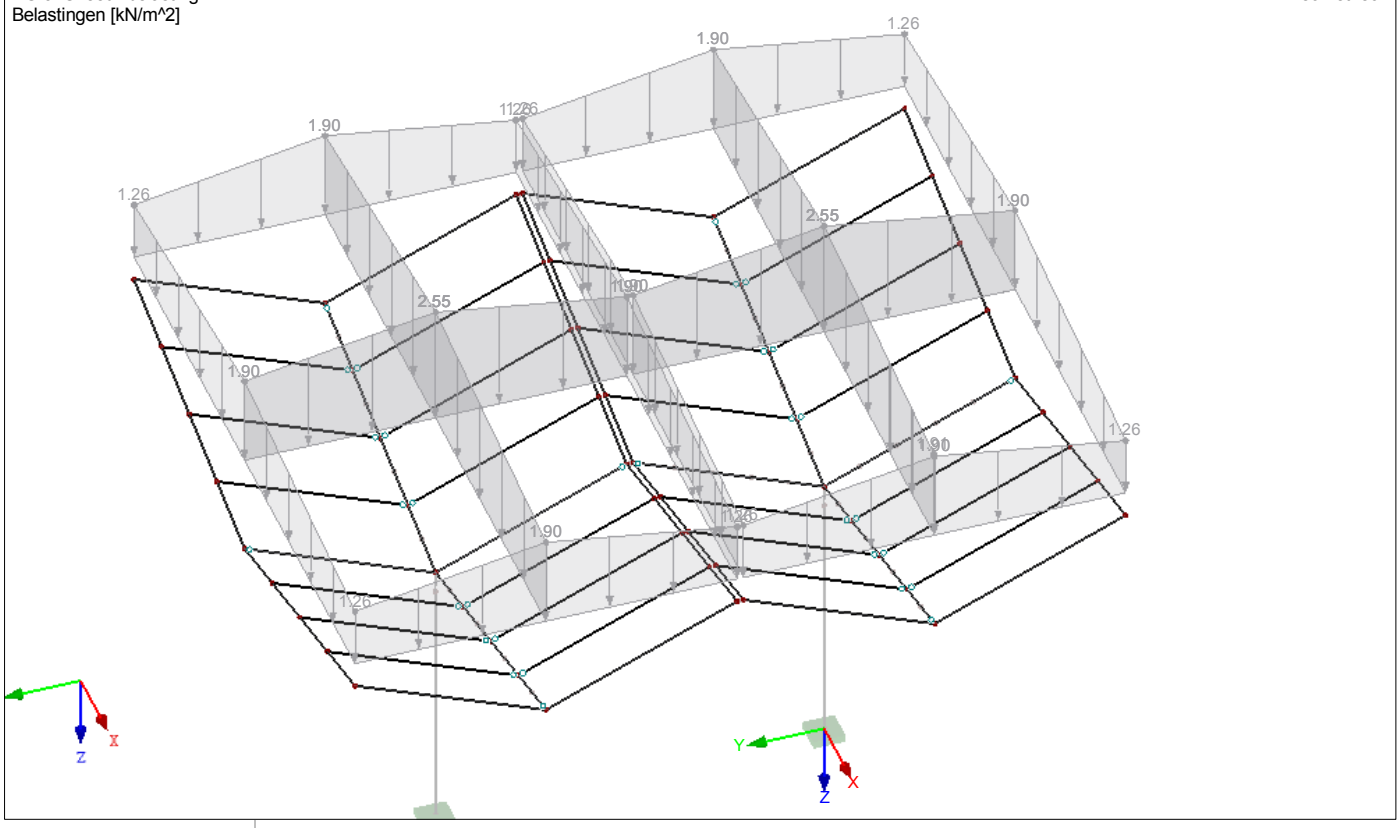

BG4
Windbelasting vol neerwaarts

3.15 GEGENEREERDE LASTEN

BG4: Windbelasting vol neerwaarts

No.	Belastingomschrijving				
1	Van Vlaklasten via vlak				
	Vlaklastrichting	Loodrecht op vlak		:	☒ z
	Staafbelastingrichting	Richting van genereerde staafbelastingen:		:	☒ Globaal in X, Y, Z
	Lasttoewijzingsbereik	☒ Volledig gesloten vlak			
	Lastverdelingstype:	☒ Gecombineerd			
	Vlaklast grootte	☒ Constant		:	0.55 kN/m²
	Grens van vlaklast vlak	Hoekknopen		:	40,164,34,39; 164,47,46,34; 34,46,42,35; 34,35,38,39
		Aanwijzing		:	Elke rij in de lijst geeft een vlak weer
	Gegenereerde totale belastingen in richting	$\Sigma P_{Vlakken}$	X	:	0.000 kN
			Y	:	0.000 kN
			Z	:	33.000 kN
		ΣP_{Staven}	X	:	0.000 kN
			Y	:	0.000 kN
			Z	:	33.000 kN
	Totale moment bij de oorsprong	$\Sigma M_{Vlakken}$	X	:	201.300 kNm
			Y	:	0.000 kNm
			Z	:	0.000 kNm
		ΣM_{Staven}	X	:	201.300 kNm
			Y	:	0.000 kNm
			Z	:	0.000 kNm
	Cellen geselecteerd voor genereren	Σ aantal cellen		:	16
		Σ cel vlak		:	66.965 m²
	Converteren van Vlaklasten naar Staaf No.			:	39-58,92-103,181,182, 189,198
3	Van Vlaklasten via vlak				
	Vlaklastrichting	Loodrecht op vlak		:	☒ z
	Staafbelastingrichting	Richting van genereerde staafbelastingen:		:	☒ Globaal in X, Y, Z
	Lasttoewijzingsbereik	☒ Volledig gesloten vlak			
	Lastverdelingstype:	☒ Gecombineerd			
	Vlaklast grootte	☒ Constant		:	0.55 kN/m²
	Grens van vlaklast vlak	Hoekknopen		:	8,4,44,7; 4,13,12,44,243; 7,44,3,6; 44,12,11,3
		Aanwijzing		:	Elke rij in de lijst geeft een vlak weer
	Gegenereerde totale belastingen in richting	$\Sigma P_{Vlakken}$	X	:	0.000 kN
			Y	:	0.000 kN
			Z	:	33.000 kN
		ΣP_{Staven}	X	:	0.000 kN
			Y	:	0.000 kN
			Z	:	33.000 kN
	Totale moment bij de oorsprong	$\Sigma M_{Vlakken}$	X	:	0.000 kNm
			Y	:	0.000 kNm
			Z	:	0.000 kNm
		ΣM_{Staven}	X	:	0.000 kNm
			Y	:	0.000 kNm
			Z	:	0.000 kNm
	Cellen geselecteerd voor genereren	Σ aantal cellen		:	16
		Σ cel vlak		:	66.965 m²
	Converteren van Vlaklasten naar Staaf No.			:	10-29,66-68,77-85,183, 184,199,200

BG4: WINDBELASTING VOL NEERWAARTS

BG 4: Windbelasting vol neerwaarts
Belastingen [kN/m^2]

Isometrisch

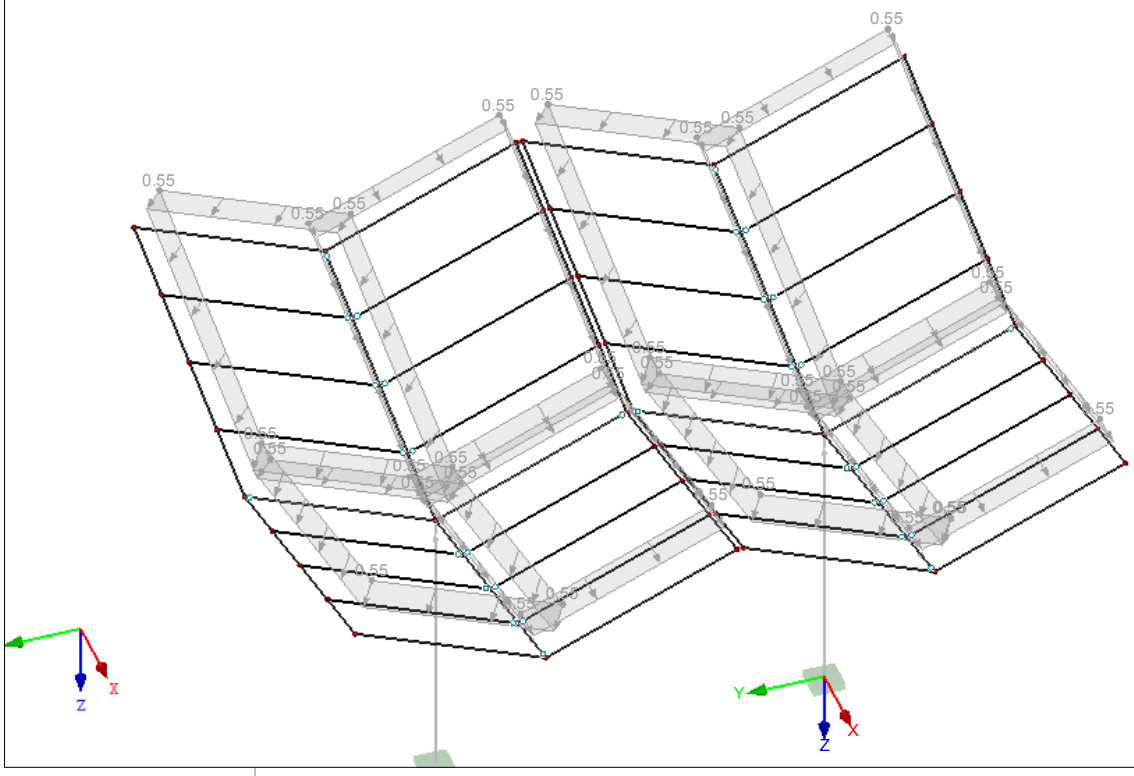

BG5
Windbelasting vol opwaarts

3.15 GEGENEREERDE LASTEN

BG5: Windbelasting vol opwaarts

No.	Belastingomschrijving				
2	Van Vlaklasten via vlak				
	Vlaklastrichting	Loodrecht op vlak		:	☒ z
	Staafbelastingrichting	Richting van genereerde staafbelastingen:		:	☒ Globaal in X, Y, Z
	Lasttoewijzingsbereik	☒ Volledig gesloten vlak			
	Lastverdelingstype:	☒ Gecombineerd			
	Vlaklast grootte	☒ Constant		:	-1.11 kN/m²
	Grens van vlaklast vlak	Hoekknopen		:	8,4,44,7; 4,13,12,44,243; 7,44,3,6; 44,12,11,3
		Aanwijzing		:	Elke rij in de lijst geeft een vlak weer
	Gegenereerde totale belastingen in richting	$\Sigma P_{Vlakken}$	X	:	0.000 kN
			Y	:	0.000 kN
			Z	:	-66.600 kN
		ΣP_{Staven}	X	:	0.000 kN
			Y	:	0.000 kN
			Z	:	-66.600 kN
	Totale moment bij de oorsprong	$\Sigma M_{Vlakken}$	X	:	0.000 kNm
			Y	:	0.000 kNm
			Z	:	0.000 kNm
		ΣM_{Staven}	X	:	0.000 kNm
			Y	:	0.000 kNm
			Z	:	0.000 kNm
	Cellen geselecteerd voor genereren	Σ aantal cellen		:	16
		Σ cel vlak		:	66.965 m²
	Converteren van Vlaklasten naar Staaf No.			:	10-29,66-68,77-85,183, 184,199,200
3	Van Vlaklasten via vlak				
	Vlaklastrichting	Loodrecht op vlak		:	☒ z
	Staafbelastingrichting	Richting van genereerde staafbelastingen:		:	☒ Globaal in X, Y, Z
	Lasttoewijzingsbereik	☒ Volledig gesloten vlak			
	Lastverdelingstype:	☒ Gecombineerd			
	Vlaklast grootte	☒ Constant		:	-1.11 kN/m²
	Grens van vlaklast vlak	Hoekknopen		:	40,164,34,39; 164,47,46,34; 34,46,42,35; 34,35,38,39
		Aanwijzing		:	Elke rij in de lijst geeft een vlak weer
	Gegenereerde totale belastingen in richting	$\Sigma P_{Vlakken}$	X	:	0.000 kN
			Y	:	0.000 kN
			Z	:	-66.600 kN
		ΣP_{Staven}	X	:	0.000 kN
			Y	:	0.000 kN
			Z	:	-66.600 kN
	Totale moment bij de oorsprong	$\Sigma M_{Vlakken}$	X	:	-406.260 kNm
			Y	:	0.000 kNm
			Z	:	0.000 kNm
		ΣM_{Staven}	X	:	-406.260 kNm
			Y	:	0.000 kNm
			Z	:	0.000 kNm
	Cellen geselecteerd voor genereren	Σ aantal cellen		:	16
		Σ cel vlak		:	66.965 m²
	Converteren van Vlaklasten naar Staaf No.			:	39-58,92-103,181,182, 189,198

BG5: WINDBELASTING VOL OPWAARTS

BG 5: Windbelasting vol opwaarts
Belastingen [kN/m^2]

Isometrisch

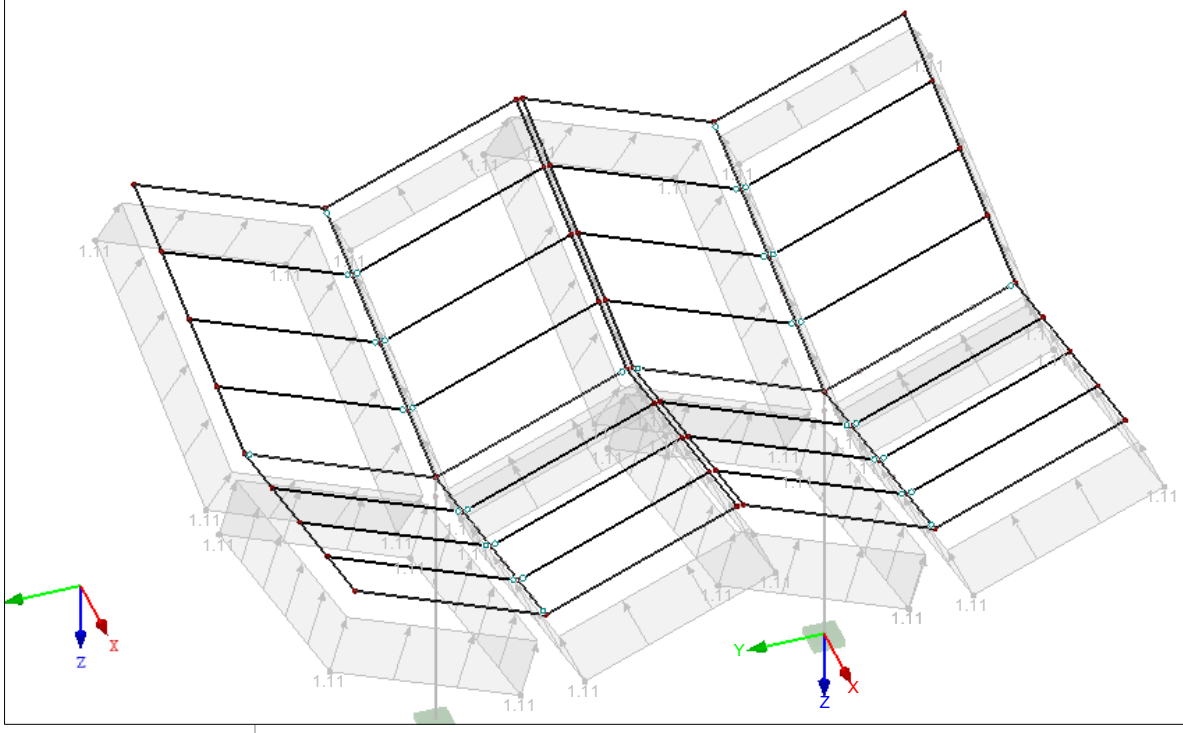

BG6
Wind van links, aangeblazen vlak

3.2 STAAFBELASTINGEN — BG6: Wind van links, aangeblazen vlak

No.	Referentie tot	Op Staven No.	Belasting Type	Belasting Verdeling	Belasting Richting	Referentie Lengte	Lastparameters Symbool	Waarde	Eenheid
1	Staven	10,12,39, 41,66-68, 77-79,92-97	Kracht	Gelijkmatig	y	Ware Lengte	p	0.470	kN/m

3.15 GEGENEREERDE LASTEN — BG6: Wind van links, aangeblazen vlak

No.	Belastingomschrijving					
1	Van Vlaklasten via vlak					
	Vlaklastrichting	Globaal gerelateerd aan echte vlak:		:	☒ YL	
	Lasttoewijzingsbereik	☒ Volledig gesloten vlak				
	Lastverdelingstype:	☒ Gecombineerd				
	Vlaklast grootte	☒ Constant		:	0.05	kN/m²
	Grens van vlaklast vlak	Hoekknopen		:	40,164,34,39; 164,47,46,34; 34,46,42,35; 34,35,38,39	
		Aanwijzing		:	Elke rij in de lijst geeft een vlak weer	
	Gegenereerde totale belastingen in richting	$\Sigma P_{Vlakken}$	X	:	0.000	kN
			Y	:	3.147	kN
			Z	:	0.000	kN
		ΣP_{Staven}	X	:	0.000	kN
			Y	:	3.147	kN
			Z	:	0.000	kN
	Totale moment bij de oorsprong	$\Sigma M_{Vlakken}$	X	:	18.695	kNm
			Y	:	0.000	kNm
			Z	:	0.000	kNm
		ΣM_{Staven}	X	:	18.695	kNm
			Y	:	0.000	kNm
			Z	:	0.000	kNm
	Cellen geselecteerd voor genereren	Σ aantal cellen		:	16	
		Σ cel vlak		:	66.965	m²
	Converteren van Vlaklasten naar Staaf No.			:	39-58,92-103,181,182, 189,198	
2	Van Vlaklasten via vlak					
	Vlaklastrichting	Globaal gerelateerd aan echte vlak:		:	☒ YL	
	Lasttoewijzingsbereik	☒ Volledig gesloten vlak				
	Lastverdelingstype:	☒ Gecombineerd				
	Vlaklast grootte	☒ Constant		:	0.05	kN/m²
	Grens van vlaklast vlak	Hoekknopen		:	8,4,44,7; 4,13,12,44,243; 7,44,3,6; 44,12,11,3	
		Aanwijzing		:	Elke rij in de lijst geeft een vlak weer	
	Gegenereerde totale belastingen in richting	$\Sigma P_{Vlakken}$	X	:	0.000	kN
			Y	:	3.147	kN
			Z	:	0.000	kN
		ΣP_{Staven}	X	:	0.000	kN
			Y	:	3.147	kN
			Z	:	0.000	kN
	Totale moment bij de oorsprong	$\Sigma M_{Vlakken}$	X	:	18.695	kNm
			Y	:	0.000	kNm
			Z	:	0.000	kNm
		ΣM_{Staven}	X	:	18.695	kNm
			Y	:	0.000	kNm
			Z	:	0.000	kNm
	Cellen geselecteerd voor genereren	Σ aantal cellen		:	16	
		Σ cel vlak		:	66.965	m²
	Converteren van Vlaklasten naar Staaf No.			:	10-29,66-68,77-85,183, 184,199,200	

BG6: WIND VAN LINKS, AANGEBLAZEN VLAK

BG 6: Wind van links, aangeblazen vlak
Belastingen [kN/m], [kN/m^2]

Isometrisch

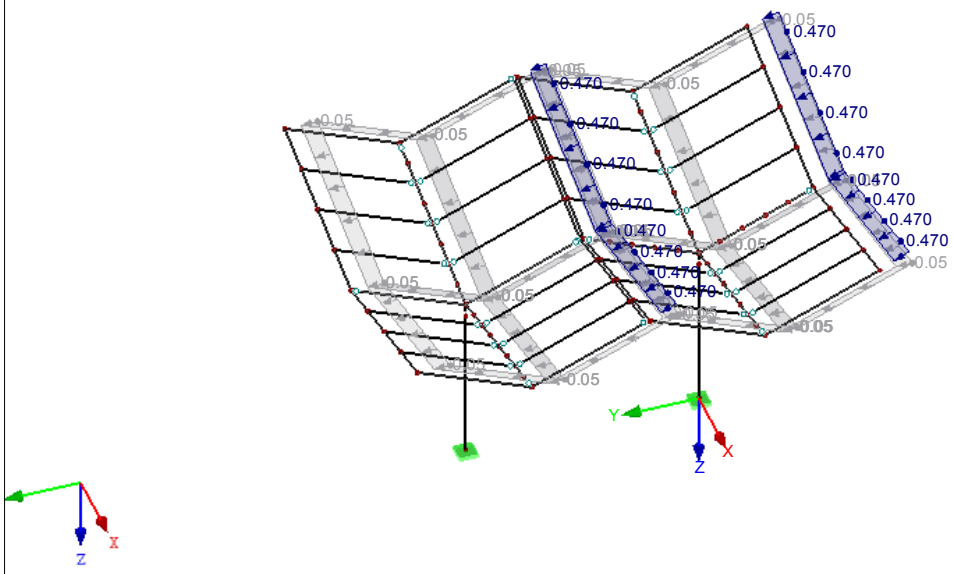

BG7
Wind van boven, aangeblazen vlak

3.2 STAAFBELASTINGEN — BG7: Wind van boven, aangeblazen vlak

No.	Referentie tot	Op Staven No.	Belasting Type	Belasting Verdeling	Belasting Richting	Referentie Lengte	Lastparameters Symbool	Waarde	Eenheid
1	Staven	13,17,42,46	Kracht	Gelijkmatig	y	Ware Lengte	p	0.470	kN/m
3	Staven	3,32	Kracht	Verlopende Doorsn.	XL	Ware Lengte	p_1	-1.520	kN/m
							p_2	-1.200	kN/m
							A	0.000	%
							B	100.000	%

3.15 GEGENEREERDE LASTEN — BG7: Wind van boven, aangeblazen vlak

No.	Belastingomschrijving					
1	Van Vlaklasten via vlak					
	Vlaklastrichting	Globaal gerelateerd aan echte vlak:		:	☒ XL	
	Lasttoewijzingsbereik	☒ Volledig gesloten vlak				
	Lastverdelingstype:	☒ Gecombineerd				
	Vlaklast grootte	☒ Constant		:	-0.05	kN/m²
	Grens van vlaklast vlak	Hoekknopen		:	8,4,44,7; 4,13,12,44,243; 7,44,3,6; 44,12,11,3	
		Aanwijzing		:	Elke rij in de lijst geeft een vlak weer	
	Gegenereerde totale belastingen in richting	$\Sigma P_{Vlakken}$	X	:	-3.147	kN
			Y	:	0.000	kN
			Z	:	0.000	kN
		ΣP_{Staven}	X	:	-3.147	kN
			Y	:	0.000	kN
			Z	:	0.000	kN
	Totale moment bij de oorsprong	$\Sigma M_{Vlakken}$	X	:	0.000	kNm
			Y	:	18.695	kNm
			Z	:	0.000	kNm
		ΣM_{Staven}	X	:	0.000	kNm
			Y	:	18.695	kNm
			Z	:	0.000	kNm
	Cellen geselecteerd voor genereren	Σ aantal cellen		:	16	
		Σ cel vlak		:	66.965	m²
	Converteren van Vlaklasten naar Staaf No.			:	10-29,66-68,77-85,183, 184,199,200	
3	Van Vlaklasten via vlak					
	Vlaklastrichting	Globaal gerelateerd aan echte vlak:		:	☒ XL	
	Lasttoewijzingsbereik	☒ Volledig gesloten vlak				
	Lastverdelingstype:	☒ Gecombineerd				
	Vlaklast grootte	☒ Constant		:	-0.05	kN/m²
	Grens van vlaklast vlak	Hoekknopen		:	40,164,34,39; 164,47,46,34; 34,46,42,35; 34,35,38,39	
		Aanwijzing		:	Elke rij in de lijst geeft een vlak weer	
	Gegenereerde totale belastingen in richting	$\Sigma P_{Vlakken}$	X	:	-3.147	kN
			Y	:	0.000	kN
			Z	:	0.000	kN
		ΣP_{Staven}	X	:	-3.147	kN
			Y	:	0.000	kN
			Z	:	0.000	kN
	Totale moment bij de oorsprong	$\Sigma M_{Vlakken}$	X	:	0.000	kNm
			Y	:	18.695	kNm
			Z	:	19.199	kNm
		ΣM_{Staven}	X	:	0.000	kNm
			Y	:	18.695	kNm
			Z	:	19.199	kNm
	Cellen geselecteerd voor genereren	Σ aantal cellen		:	16	
		Σ cel vlak		:	66.965	m²
	Converteren van Vlaklasten naar Staaf No.			:	39-58,92-103,181,182, 189,198	

BG7: WIND VAN BOVEN, AANGEBLAZEN VLAK

BG 7: Wind van boven, aangeblazen vlak
Belastingen [kN/m], [kN/m^2]

Isometrisch

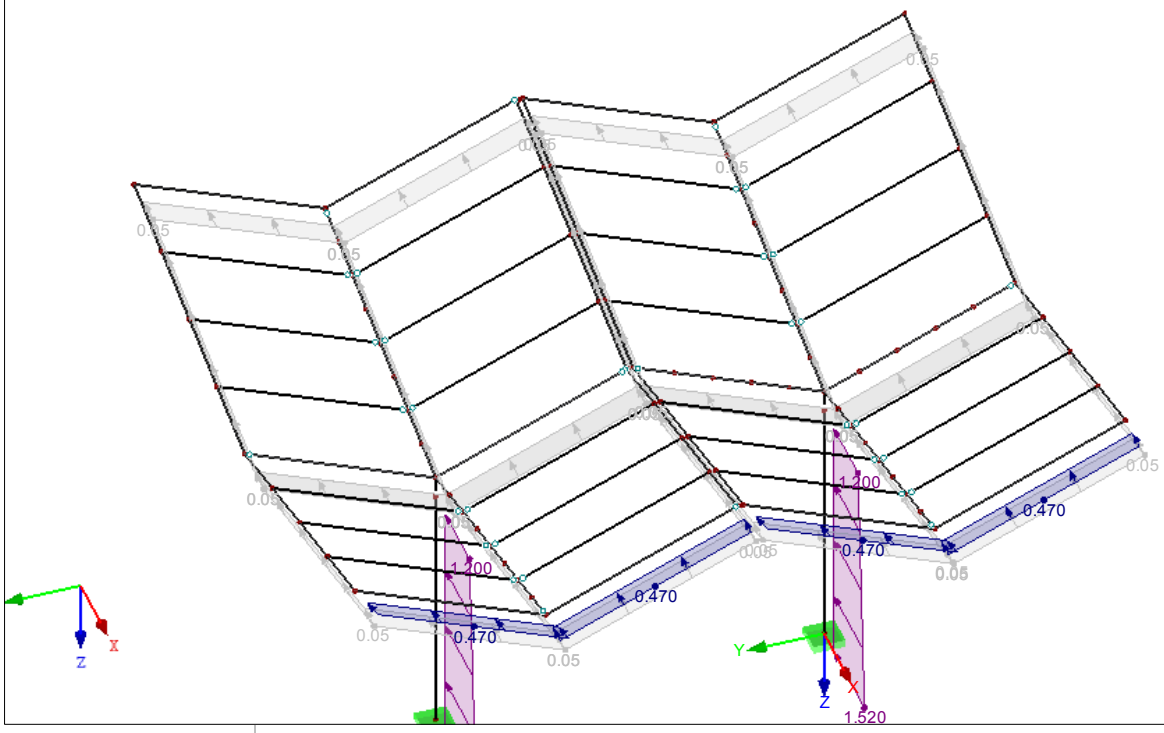

BG8
Windbelasting half neerwaarts

3.15 GEGENEREERDE LASTEN — BG8: Windbelasting half neerwaarts

No.	Belastingomschrijving					
3	Van Vlaklasten via vlak					
	Vlaklastrichting	Loodrecht op vlak		:	☒ z	
	Staafbelastingrichting	Richting van genereerde staafbelastingen:		:	☒ Globaal in X, Y, Z	
	Lasttoewijzingsbereik	☒ Volledig gesloten vlak				
	Lastverdelingstype:	☒ Gecombineerd				
	Vlaklast grootte	☒ Constant		:	0.55	kN/m²
	Grens van vlaklast vlak	Hoekknopen		:	34,35,38,39; 34,39,40,164	
		Aanwijzing		:	Elke rij in de lijst geeft een vlak weer	
	Gegenereerde totale belastingen in richting	$\Sigma P_{Vlakken}$	X	:	0.000	kN
			Y	:	-7.013	kN
			Z	:	16.500	kN
		ΣP_{Staven}	X	:	0.000	kN
			Y	:	-7.012	kN
			Z	:	16.500	kN
	Totale moment bij de oorsprong	$\Sigma M_{Vlakken}$	X	:	34.246	kNm
			Y	:	0.000	kNm
			Z	:	0.000	kNm
		ΣM_{Staven}	X	:	34.246	kNm
			Y	:	0.000	kNm
			Z	:	0.000	kNm
	Cellen geselecteerd voor genereren	Σ aantal cellen		:	8	
		Σ cel vlak		:	33.483	m²
	Converteren van Vlaklasten naar Staaf No.			:	39-42,47-52,92-97,182, 189,198	
4	Van Vlaklasten via vlak					
	Vlaklastrichting	Loodrecht op vlak		:	☒ z	
	Staafbelastingrichting	Richting van genereerde staafbelastingen:		:	☒ Globaal in X, Y, Z	
	Lasttoewijzingsbereik	☒ Volledig gesloten vlak				
	Lastverdelingstype:	☒ Gecombineerd				
	Vlaklast grootte	☒ Constant		:	0.55	kN/m²
	Grens van vlaklast vlak	Hoekknopen		:	44,3,6,7; 44,7,8,4	
		Aanwijzing		:	Elke rij in de lijst geeft een vlak weer	
	Gegenereerde totale belastingen in richting	$\Sigma P_{Vlakken}$	X	:	0.000	kN
			Y	:	-7.013	kN
			Z	:	16.500	kN
		ΣP_{Staven}	X	:	0.000	kN
			Y	:	-7.012	kN
			Z	:	16.500	kN
	Totale moment bij de oorsprong	$\Sigma M_{Vlakken}$	X	:	-66.404	kNm
			Y	:	0.000	kNm
			Z	:	0.000	kNm
		ΣM_{Staven}	X	:	-66.404	kNm
			Y	:	0.000	kNm
			Z	:	0.000	kNm
	Cellen geselecteerd voor genereren	Σ aantal cellen		:	8	
		Σ cel vlak		:	33.483	m²
	Converteren van Vlaklasten naar Staaf No.			:	10-13,18-23,66-68, 77-79,184,199,200	

BG8: WINDBELASTING HALF NEERWAARTS

BG 8: Windbelasting half neerwaarts
Belastingen [kN/m^2]

Isometrisch

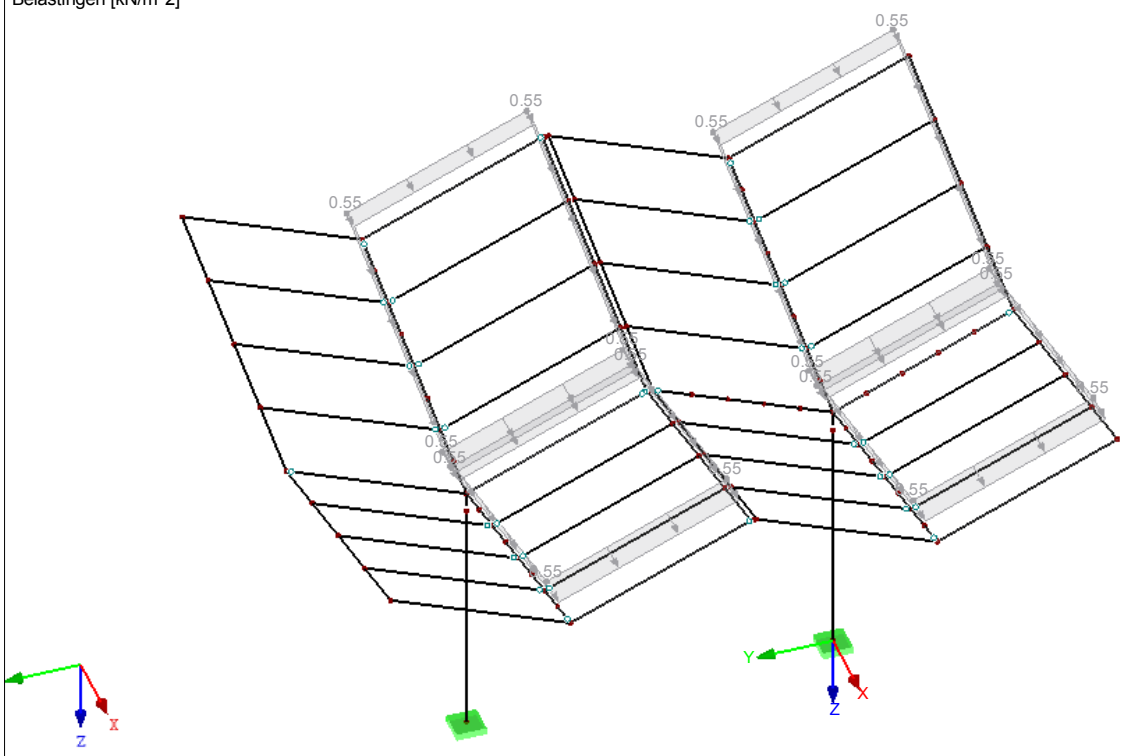

BG9
Windbelasting half2 neerwaarts

3.15 GEGENEREERDE LASTEN

BG9: Windbelasting half2 neerwaarts

No.	Belastingomschrijving				
3	Van Vlaklasten via vlak				
	Vlaklastrichting	Loodrecht op vlak		:	☒ z
	Staafbelastingrichting	Richting van genereerde staafbelastingen:		:	☒ Globaal in X, Y, Z
	Lasttoewijzingsbereik	☒ Volledig gesloten vlak			
	Lastverdelingstype:	☒ Gecombineerd			
	Vlaklast grootte	☒ Constant		:	0.55 kN/m²
	Grens van vlaklast vlak	Hoekknopen		:	46,34,164,47; 34,39,40,164
		Aanwijzing		:	Elke rij in de lijst geeft een vlak weer
	Gegenereerde totale belastingen in richting	$\Sigma P_{Vlakken}$	X	:	4.208 kN
			Y	:	0.000 kN
			Z	:	16.500 kN
		ΣP_{Staven}	X	:	4.207 kN
			Y	:	0.000 kN
			Z	:	16.500 kN
	Totale moment bij de oorsprong	$\Sigma M_{Vlakken}$	X	:	100.650 kNm
			Y	:	-66.243 kNm
			Z	:	-25.666 kNm
		ΣM_{Staven}	X	:	100.650 kNm
			Y	:	-66.243 kNm
			Z	:	-25.666 kNm
	Cellen geselecteerd voor genereren	Σ aantal cellen		:	8
		Σ cel vlak		:	33.483 m²
	Converteren van Vlaklasten naar Staaf No.			:	41,42,45,46,50-52, 56-58,95-97,101-103, 181,182,189
4	Van Vlaklasten via vlak				
	Vlaklastrichting	Loodrecht op vlak		:	☒ z
	Staafbelastingrichting	Richting van genereerde staafbelastingen:		:	☒ Globaal in X, Y, Z
	Lasttoewijzingsbereik	☒ Volledig gesloten vlak			
	Lastverdelingstype:	☒ Gecombineerd			
	Vlaklast grootte	☒ Constant		:	0.55 kN/m²
	Grens van vlaklast vlak	Hoekknopen		:	12,44,4,13; 44,7,8,4
		Aanwijzing		:	Elke rij in de lijst geeft een vlak weer
	Gegenereerde totale belastingen in richting	$\Sigma P_{Vlakken}$	X	:	4.208 kN
			Y	:	0.000 kN
			Z	:	16.500 kN
		ΣP_{Staven}	X	:	4.207 kN
			Y	:	0.000 kN
			Z	:	16.500 kN
	Totale moment bij de oorsprong	$\Sigma M_{Vlakken}$	X	:	0.000 kNm
			Y	:	-66.243 kNm
			Z	:	0.000 kNm
		ΣM_{Staven}	X	:	0.000 kNm
			Y	:	-66.243 kNm
			Z	:	0.000 kNm
	Cellen geselecteerd voor genereren	Σ aantal cellen		:	8
		Σ cel vlak		:	33.483 m²
	Converteren van Vlaklasten naar Staaf No.			:	12,13,16,17,21-23, 27-29,77-79,83-85,183, 184,200

BG9: WINDBELASTING HALF2 NEERWAARTS

BG 9: Windbelasting half2 neerwaarts
Belastingen [kN/m^2]

Isometrisch

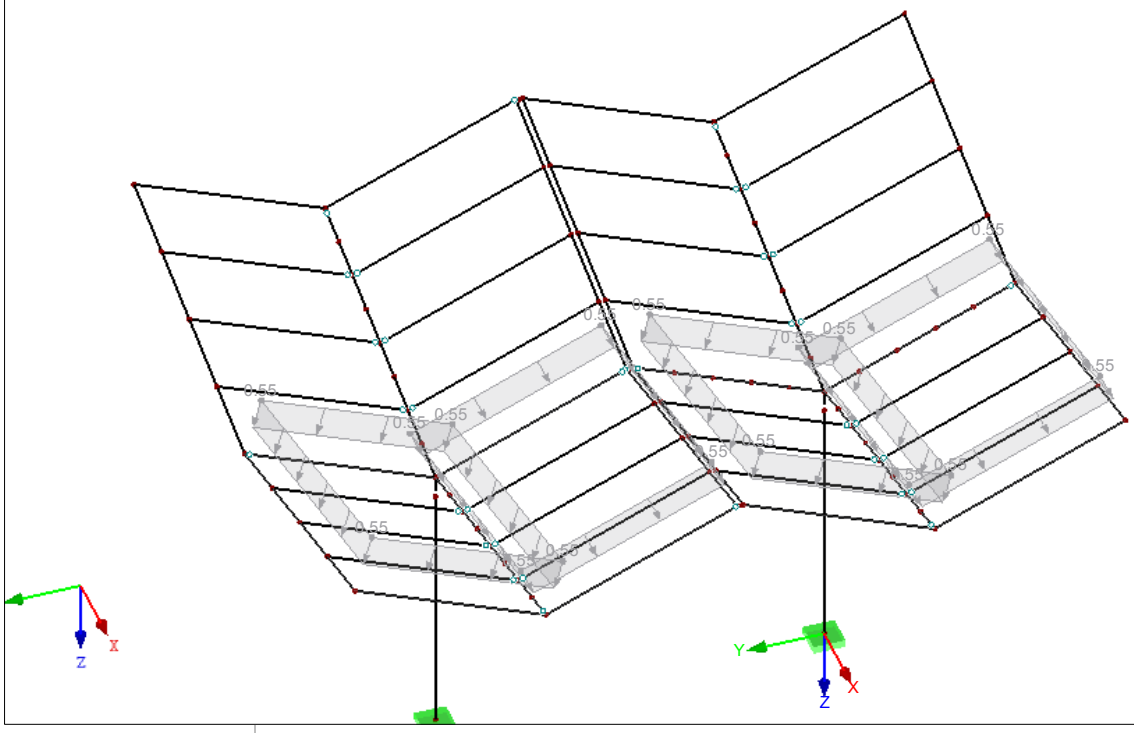

BG10
Windbelasting half opwaarts

3.15 GEGENEREERDE LASTEN

BG10: Windbelasting half opwaarts

No.	Belastingomschrijving					
1	Van Vlaklasten via vlak					
	Vlaklastrichting	Loodrecht op vlak		:	☒ z	
	Staafbelastingrichting	Richting van genereerde staafbelastingen:		:	☒ Globaal in X, Y, Z	
	Lasttoewijzingsbereik	☒ Volledig gesloten vlak				
	Lastverdelingstype:	☒ Gecombineerd				
	Vlaklast grootte	☒ Constant		:	-1.11	kN/m²
	Grens van vlaklast vlak	Hoekknopen		:	13,12,44,4; 12,11,3,44	
		Aanwijzing		:	Elke rij in de lijst geeft een vlak weer	
	Gegenereerde totale belastingen in richting	$\Sigma P_{Vlakken}$	X	:	0.000	kN
			Y	:	-14.153	kN
			Z	:	-33.300	kN
		ΣP_{Staven}	X	:	0.000	kN
			Y	:	-14.153	kN
			Z	:	-33.300	kN
	Totale moment bij de oorsprong	$\Sigma M_{Vlakken}$	X	:	-134.016	kNm
			Y	:	0.000	kNm
			Z	:	0.000	kNm
		ΣM_{Staven}	X	:	-134.016	kNm
			Y	:	0.000	kNm
			Z	:	0.000	kNm
	Cellen geselecteerd voor genereren	Σ aantal cellen		:	8	
		Σ cel vlak		:	33.483	m²
	Converteren van Vlaklasten naar Staaf No.			:	14-17,24-29,80-85,183, 199,200	
3	Van Vlaklasten via vlak					
	Vlaklastrichting	Loodrecht op vlak		:	☒ z	
	Staafbelastingrichting	Richting van genereerde staafbelastingen:		:	☒ Globaal in X, Y, Z	
	Lasttoewijzingsbereik	☒ Volledig gesloten vlak				
	Lastverdelingstype:	☒ Gecombineerd				
	Vlaklast grootte	☒ Constant		:	-1.11	kN/m²
	Grens van vlaklast vlak	Hoekknopen		:	47,46,34,164; 46,42,35,34	
		Aanwijzing		:	Elke rij in de lijst geeft een vlak weer	
	Gegenereerde totale belastingen in richting	$\Sigma P_{Vlakken}$	X	:	0.000	kN
			Y	:	-14.153	kN
			Z	:	-33.300	kN
		ΣP_{Staven}	X	:	0.000	kN
			Y	:	-14.153	kN
			Z	:	-33.300	kN
	Totale moment bij de oorsprong	$\Sigma M_{Vlakken}$	X	:	-337.146	kNm
			Y	:	0.000	kNm
			Z	:	0.000	kNm
		ΣM_{Staven}	X	:	-337.146	kNm
			Y	:	0.000	kNm
			Z	:	0.000	kNm
	Cellen geselecteerd voor genereren	Σ aantal cellen		:	8	
		Σ cel vlak		:	33.483	m²
	Converteren van Vlaklasten naar Staaf No.			:	43-46,53-58,98-103,181, 189,198	

BG10: WINDBELASTING HALF OPWAARTS

BG 10: Windbelasting half opwaarts
Belastingen [kN/m^2]

Isometrisch

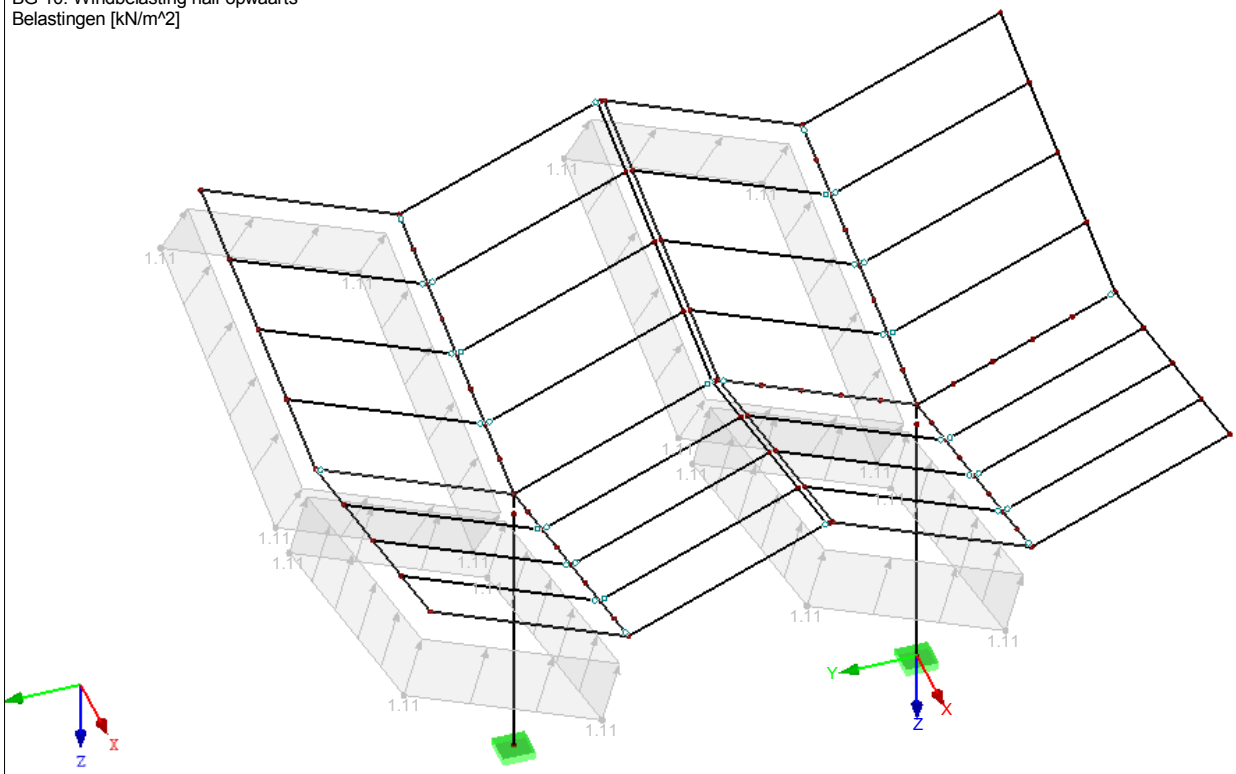

BG11
Windbelasting half2 opwaarts

3.15 GEGENEREERDE LASTEN

BG11: Windbelasting half2 opwaarts

No.	Belastingomschrijving				
1	Van Vlaklasten via vlak				
	Vlaklastrichting	Loodrecht op vlak		:	☒ z
	Staafbelastingrichting	Richting van genereerde staafbelastingen:		:	☒ Globaal in X, Y, Z
	Lasttoewijzingsbereik	☒ Volledig gesloten vlak			
	Lastverdelingstype:	☒ Gecombineerd			
	Vlaklast grootte	☒ Constant		:	-1.11 kN/m²
	Grens van vlaklast vlak	Hoekknopen		:	12,44,4,13; 44,7,8,4
		Aanwijzing		:	Elke rij in de lijst geeft een vlak weer
	Gegenereerde totale belastingen in richting	$\Sigma P_{Vlakken}$	X	:	-8.492 kN
			Y	:	0.000 kN
			Z	:	-33.300 kN
		ΣP_{Staven}	X	:	-8.491 kN
			Y	:	0.000 kN
			Z	:	-33.300 kN
	Totale moment bij de oorsprong	$\Sigma M_{Vlakken}$	X	:	0.000 kNm
			Y	:	133.690 kNm
			Z	:	0.000 kNm
		ΣM_{Staven}	X	:	0.000 kNm
			Y	:	133.689 kNm
			Z	:	0.000 kNm
	Cellen geselecteerd voor genereren	Σ aantal cellen		:	8
		Σ cel vlak		:	33.483 m²
	Converteren van Vlaklasten naar Staaf No.			:	12,13,16,17,21-23, 27-29,77-79,83-85,183, 184,200
2	Van Vlaklasten via vlak				
	Vlaklastrichting	Loodrecht op vlak		:	☒ z
	Staafbelastingrichting	Richting van genereerde staafbelastingen:		:	☒ Globaal in X, Y, Z
	Lasttoewijzingsbereik	☒ Volledig gesloten vlak			
	Lastverdelingstype:	☒ Gecombineerd			
	Vlaklast grootte	☒ Constant		:	-1.11 kN/m²
	Grens van vlaklast vlak	Hoekknopen		:	46,34,164,47; 34,39,40,164
		Aanwijzing		:	Elke rij in de lijst geeft een vlak weer
	Gegenereerde totale belastingen in richting	$\Sigma P_{Vlakken}$	X	:	-8.492 kN
			Y	:	0.000 kN
			Z	:	-33.300 kN
		ΣP_{Staven}	X	:	-8.491 kN
			Y	:	0.000 kN
			Z	:	-33.300 kN
	Totale moment bij de oorsprong	$\Sigma M_{Vlakken}$	X	:	-203.130 kNm
			Y	:	133.690 kNm
			Z	:	51.798 kNm
		ΣM_{Staven}	X	:	-203.130 kNm
			Y	:	133.689 kNm
			Z	:	51.798 kNm
	Cellen geselecteerd voor genereren	Σ aantal cellen		:	8
		Σ cel vlak		:	33.483 m²
	Converteren van Vlaklasten naar Staaf No.			:	41,42,45,46,50-52, 56-58,95-97,101-103, 181,182,189

BG11: WINDBELASTING HALF2 OPWAARTS

BG 11: Windbelasting half2 opwaarts
Belastingen [kN/m^2]

Isometrisch

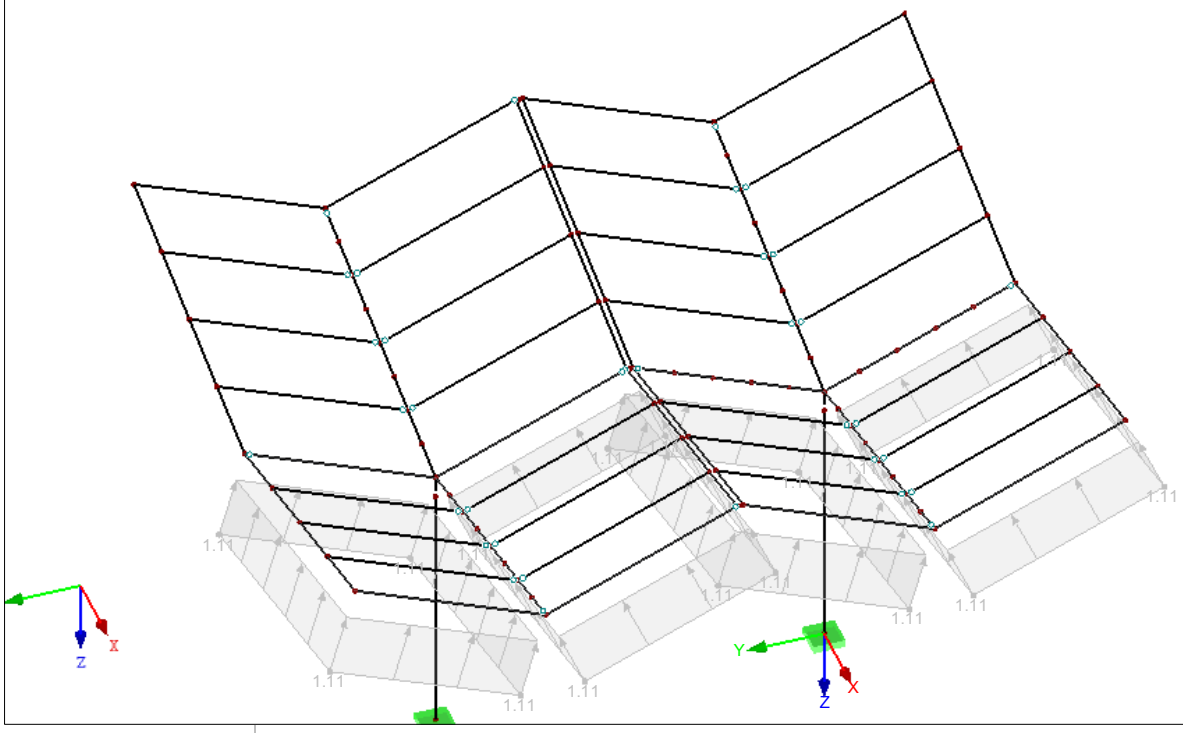

BG12
Personenbelasting

3.1 KNOOPBELASTINGEN - PER COMPONENT - COÖRDINATENSYSTEEM

BG12: Personenbelasting

No.	Op Knoop No.	Coördinaten Syteem	Kracht [kN] P_X	P_Y	P_Z	Moment [kNm] M_X	M_Y	M_Z
1	3,4,7,35,46,164	0 | Globaal XYZ	0.000	0.000	1.500	0.000	0.000	0.000

BG12: PERSONENBELASTING

BG 12: Personenbelasting
Belastingen [kN]

Isometrisch

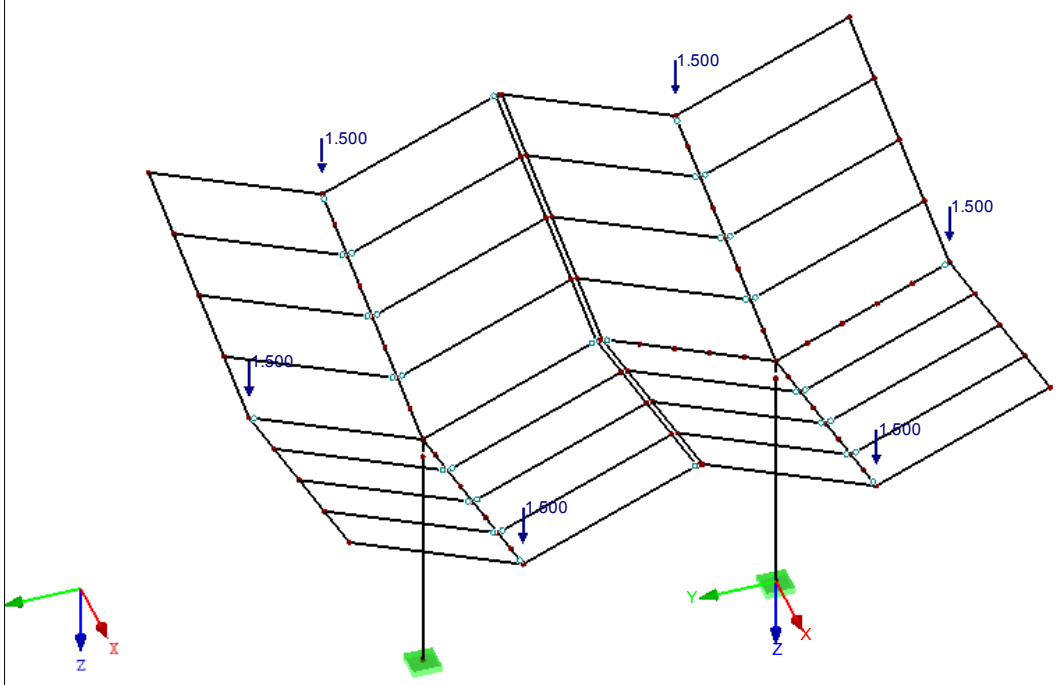

4.1 KNOPEN - REACTIEKRACHTEN

Knoop No.	BG/BC	Reactiekrachten [kN] $P_{X'}$	$P_{Y'}$	$P_{Z'}$	Reactiemomenten [kNm] $M_{X'}$	$M_{Y'}$	$M_{Z'}$
1	BG1	0.00	-0.98	31.02	-5.46	0.00	0.00
	BG2	0.00	-0.81	17.61	-4.32	0.00	0.00
	BG3	0.00	-5.10	114.10	-27.04	0.00	0.00
	BG4	0.00	-1.71	33.00	-9.24	0.00	0.00
	BG5	0.00	3.45	-66.60	18.64	0.00	0.00
	BG6	0.00	7.63	-3.03	28.12	0.00	0.00
	BG7	-11.98	-0.05	0.64	-0.25	47.17	0.00
	BG8	0.00	-7.87	28.11	-35.61	0.00	0.00
	BG9	4.21	-0.86	16.50	-4.62	-66.24	-0.07
	BG10	0.00	-12.43	-9.86	-53.23	0.00	0.00
	BG11	-8.49	1.73	-33.30	9.32	133.69	0.14
	BG12	0.00	0.85	4.50	0.92	0.00	0.00
	BC1	0.00	-9.98	236.80	-53.97	0.00	0.00
	BC2	0.00	1.94	213.27	-9.10	0.00	0.00
	BC3	-17.97	-9.58	218.81	-51.95	71.57	0.00
	BC4	0.00	-7.31	205.99	-49.04	0.00	0.00
	BC5	-17.97	-18.82	211.52	-91.86	71.57	0.00
	BC6	6.33	3.21	188.52	-2.17	-101.10	-0.11
	BC7	-11.66	-8.31	194.06	-44.98	-29.63	-0.10
	BC8	0.00	-5.53	259.26	-39.68	0.00	0.00
	BC9	-8.98	-11.28	262.03	-61.13	35.88	0.00
	BC10	0.00	-10.15	255.63	-59.69	0.00	0.00
	BC11	-8.98	-15.91	258.40	-81.14	35.88	0.00
	BC12	3.16	-4.89	246.89	-36.20	-50.82	-0.05
	BC13	-5.83	-10.65	249.66	-57.64	-14.96	-0.05
	BC14	0.00	15.02	-60.67	61.25	0.00	0.00
	BC15	-17.97	3.50	-55.16	18.77	70.67	0.00
	BC16	0.00	-2.76	103.29	-24.53	0.00	0.00
	BC17	-17.97	-14.28	108.81	-67.20	71.17	0.00
	BC18	6.33	7.76	85.85	22.13	-100.14	-0.11
	BC19	-11.66	-3.76	91.37	-20.53	-29.08	-0.10
	BC20	0.00	-8.79	24.44	-46.46	0.00	0.00
	BC21	-17.97	-20.30	29.95	-89.01	70.95	0.00
	BC22	-12.78	12.42	-10.73	47.34	200.76	0.21
	BC23	-30.70	0.90	-5.21	4.80	271.64	0.22
	BC24	0.00	-1.14	72.41	-11.83	0.00	0.00
	BC25	0.00	-6.85	162.73	-36.92	0.00	0.00
	BC26	0.00	1.10	147.05	-7.07	0.00	0.00
	BC27	-11.98	-6.58	150.73	-35.57	47.54	0.00
	BC28	0.00	-5.06	142.18	-33.62	0.00	0.00
	BC29	-11.98	-12.74	145.87	-62.11	47.54	0.00
	BC30	4.22	1.95	130.55	-2.45	-67.04	-0.07
	BC31	-7.77	-5.73	134.23	-30.94	-19.54	-0.07
	BC32	0.00	-3.88	177.71	-27.42	0.00	0.00
	BC33	-5.99	-7.72	179.55	-41.68	23.81	0.00
	BC34	0.00	-6.97	175.28	-40.71	0.00	0.00
	BC35	-5.99	-10.81	177.12	-54.97	23.81	0.00
	BC36	2.11	-3.46	169.46	-25.10	-33.64	-0.04
	BC37	-3.89	-7.30	171.30	-39.36	-9.83	-0.03
	BC38	0.00	9.29	-21.00	36.96	0.00	0.00
	BC39	-11.98	1.62	-17.32	8.61	47.18	0.00
	BC40	0.00	-2.02	73.72	-17.32	0.00	0.00
	BC41	-11.98	-9.70	77.40	-45.74	47.37	0.00
	BC42	4.22	4.99	62.10	13.76	-66.62	-0.07
	BC43	-7.77	-2.69	65.78	-14.66	-19.29	-0.07
	BC44	0.00	-6.58	35.75	-34.92	0.00	0.00
	BC45	-11.98	-14.25	39.42	-63.31	47.30	0.00
	BC46	-8.51	7.57	12.30	27.67	134.01	0.14
	BC47	-20.47	-0.11	15.98	-0.71	181.28	0.15
	BC48	0.00	-0.94	53.13	-8.86	0.00	0.00
9	BG1	0.00	0.98	31.03	5.45	0.00	0.00
	BG2	0.00	0.81	17.61	4.31	0.00	0.00
	BG3	0.00	5.10	114.11	27.00	0.00	0.00
	BG4	0.00	1.71	33.00	9.22	0.00	0.00
	BG5	0.00	-3.45	-66.60	-18.61	0.00	0.00
	BG6	0.00	7.64	6.61	28.12	0.00	0.00
	BG7	-11.98	0.05	0.64	0.25	47.18	0.00
	BG8	0.00	-6.16	4.89	-26.38	0.00	0.00
	BG9	4.21	0.86	16.50	4.61	-66.24	0.07
	BG10	0.00	-15.88	-56.74	-71.84	0.00	0.00
	BG11	-8.49	-1.73	-33.30	-9.31	133.69	-0.14
	BG12	0.00	-0.85	4.50	-0.92	0.00	0.00
	BC1	0.00	9.98	236.83	53.88	0.00	0.00
	BC2	0.00	20.96	227.80	93.99	0.00	0.00
	BC3	-17.97	9.58	218.83	51.86	71.57	0.00
	BC4	0.00	9.17	185.58	40.12	0.00	0.00
	BC5	-17.97	-2.21	176.62	-1.96	71.43	-0.01
	BC6	6.29	19.69	203.05	87.00	-101.03	0.11
	BC7	-11.66	8.31	194.08	44.91	-29.63	0.10
	BC8	0.00	16.97	266.55	82.13	0.00	0.00
	BC9	-8.98	11.28	262.06	61.03	35.88	0.00
	BC10	0.00	11.08	245.43	55.14	0.00	0.00
	BC11	-8.98	5.39	240.95	34.06	35.84	0.00
	BC12	3.15	16.34	254.18	78.64	-50.80	0.05
	BC13	-5.83	10.65	249.69	57.55	-14.96	0.05
	BC14	0.00	7.88	-46.21	23.00	0.00	0.00
	BC15	-17.97	-3.50	-55.17	-18.74	70.67	0.00
	BC16	0.00	4.62	82.90	15.78	0.00	0.00
	BC17	-17.97	-6.76	73.94	-26.15	71.03	-0.01
	BC18	6.29	15.14	100.34	62.44	-100.07	0.11
	BC19	-11.66	3.76	91.38	20.50	-29.08	0.10
	BC20	0.00	-10.77	-31.42	-56.79	0.00	0.00

4.1 KNOPEN - REACTIEKRACHTEN

Knoop No.	BG/BC	Reactiekrachten [kN] $P_{X'}$	$P_{Y'}$	$P_{Z'}$	Reactiemomenten [kNm] $M_{X'}$	$M_{Y'}$	$M_{Z'}$
9	BC21	-17.97	-22.16	-40.37	-98.57	70.67	-0.01
	BC22	-12.69	10.48	3.74	37.02	200.61	-0.22
	BC23	-30.70	-0.90	-5.21	-4.79	271.64	-0.22
	BC24	0.00	1.14	72.41	11.81	0.00	0.00
	BC25	0.00	6.85	162.75	36.86	0.00	0.00
	BC26	0.00	14.16	156.73	63.54	0.00	0.00
	BC27	-11.98	6.58	150.75	35.52	47.54	0.00
	BC28	0.00	6.30	128.59	27.72	0.00	0.00
	BC29	-11.98	-1.29	122.62	-0.27	47.48	0.00
	BC30	4.20	13.32	140.23	58.89	-67.01	0.07
	BC31	-7.77	5.73	134.25	30.89	-19.54	0.07
	BC32	0.00	11.52	182.56	55.64	0.00	0.00
	BC33	-5.99	7.72	179.57	41.62	23.81	0.00
	BC34	0.00	7.59	168.49	37.71	0.00	0.00
	BC35	-5.99	3.79	165.50	23.69	23.80	0.00
	BC36	2.10	11.09	174.31	53.32	-33.63	0.04
	BC37	-3.89	7.30	171.32	39.30	-9.83	0.03
	BC38	0.00	5.97	-11.35	19.26	0.00	0.00
	BC39	-11.98	-1.62	-17.32	-8.60	47.18	0.00
	BC40	0.00	3.26	60.13	11.50	0.00	0.00
	BC41	-11.98	-4.33	54.16	-16.43	47.30	0.00
	BC42	4.20	10.28	71.76	42.58	-66.58	0.07
	BC43	-7.77	2.69	65.79	14.64	-19.29	0.07
	BC44	0.00	-6.46	-1.50	-33.99	0.00	0.00
	BC45	-11.98	-14.05	-7.46	-61.86	47.18	-0.01
	BC46	-8.47	7.70	21.95	28.60	133.94	-0.15
	BC47	-20.47	0.11	15.98	0.71	181.28	-0.15
	BC48	0.00	0.94	53.14	8.85	0.00	0.00

4.1 KNOPEN - REACTIEKRACHTEN

Resultaatcombinaties

Knoop No.	RC		Reactiekrachten [kN] $P_{X'}$	$P_{Y'}$	$P_{Z'}$	Reactiemomenten [kNm] $M_{X'}$	$M_{Y'}$	$M_{Z'}$
1	RC1	Max	6.33	15.02	262.03	61.25	271.64	0.22
		Min	-30.70	-20.30	-60.67	-91.86	-101.10	-0.11
9	RC1	Max	6.29	20.96	266.55	93.99	271.64	0.11
		Min	-30.70	-22.16	-55.17	-98.57	-101.03	-0.22

SNEDEKRACHTEN N - STAAL

RC 1: ULS omhullend
Snedekrachten N
Resultaatcombinaties: Max- en Min-waardes

Isometrisch

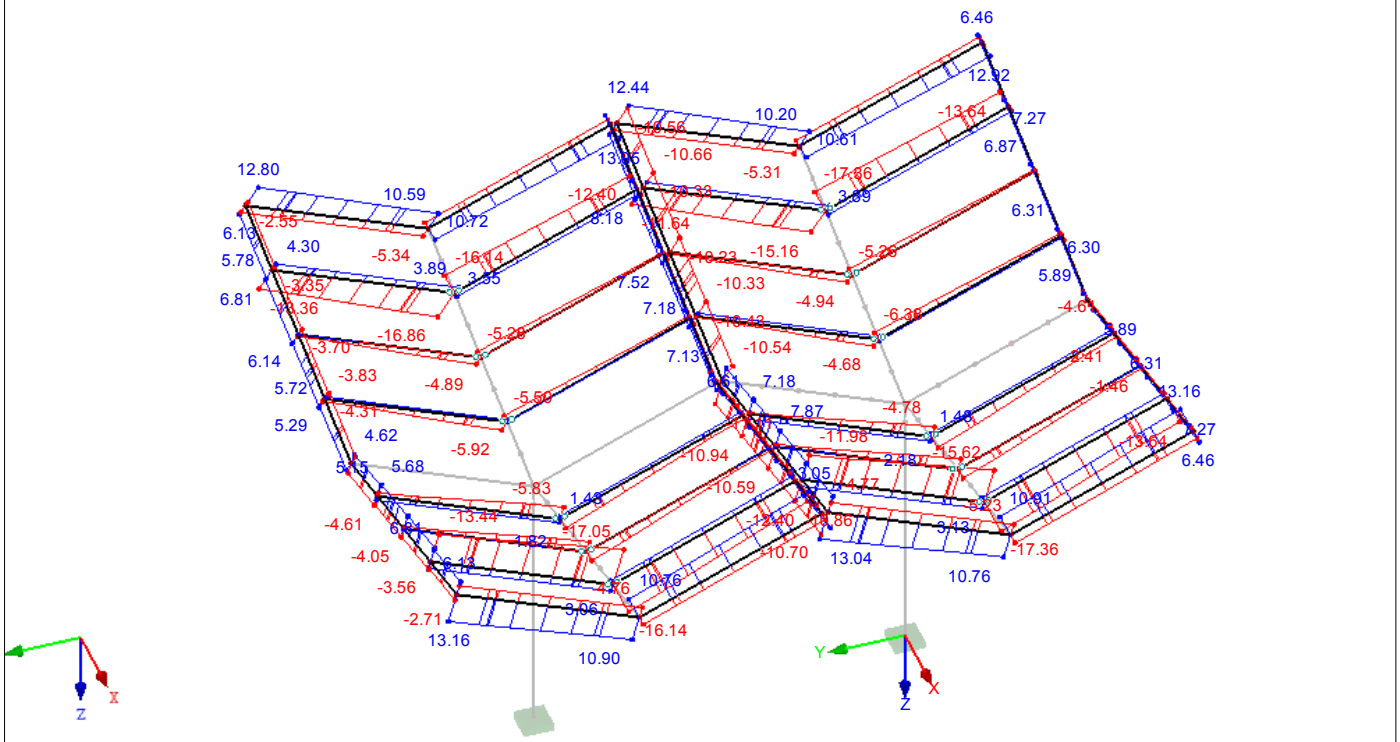

Max N: 13.16, Min N: -17.36 kN

SNEDEKRACHTEN V_y - STAAL

RC 1: ULS omhullend
Snedekrachten V-y
Resultaatcombinaties: Max- en Min-waardes

Isometrisch

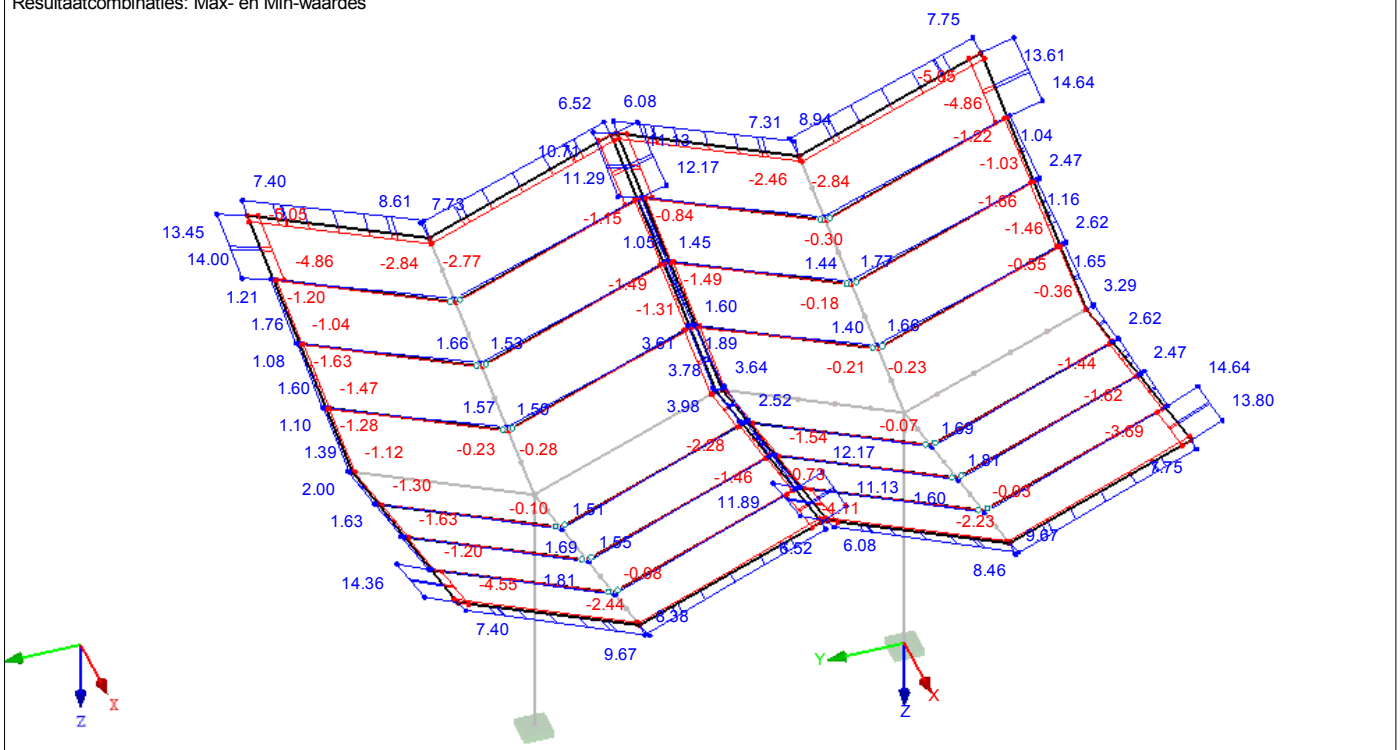

Max V-y: 14.64, Min V-y: -5.27 kN

SNEDEKRACHTEN V_z - STAAL

RC 1: ULS omhullend
Snedekrachten V-z
Resultaatcombinaties: Max- en Min-waardes

Isometrisch

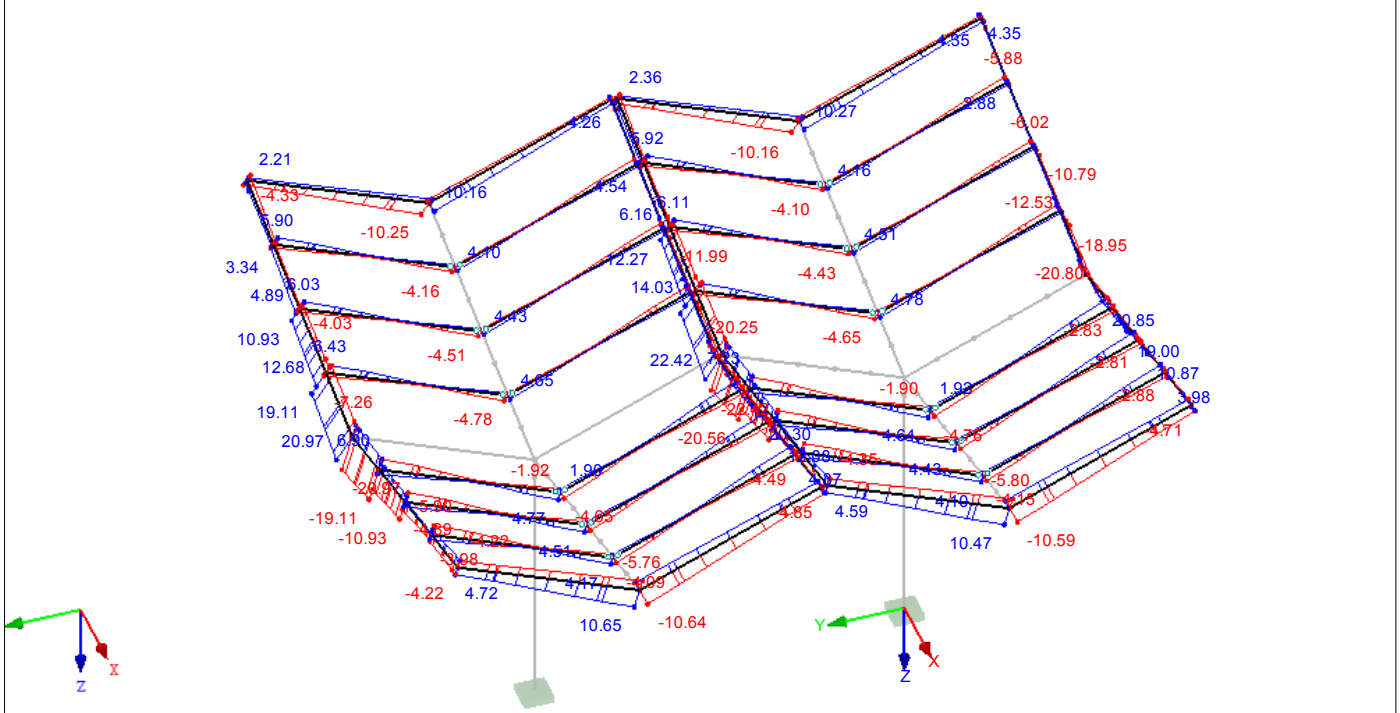

Max V-z: 22.42, Min V-z: -22.42 kN

SNEDEKRACHTEN M_T - STAAL

RC 1: ULS omhullend
Snedekrachten M-T
Resultaatcombinaties: Max- en Min-waardes

Isometrisch

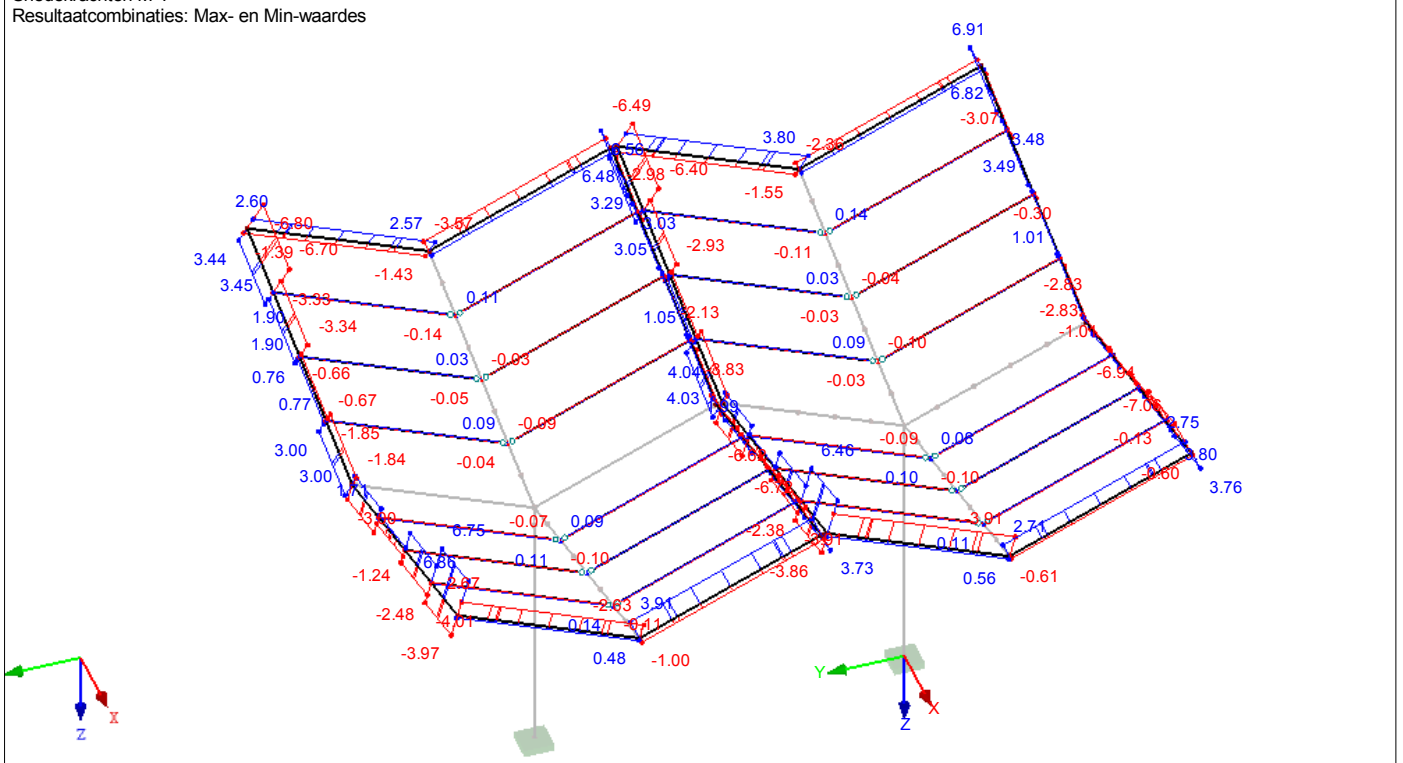

Max M-T: 6.91, Min M-T: -7.06 kNm

SNEDEKRACHTEN M_y - STAAL

RC 1: ULS omhullend
Snedekrachten M-y
Resultaatcombinaties: Max- en Min-waardes

Isometrisch

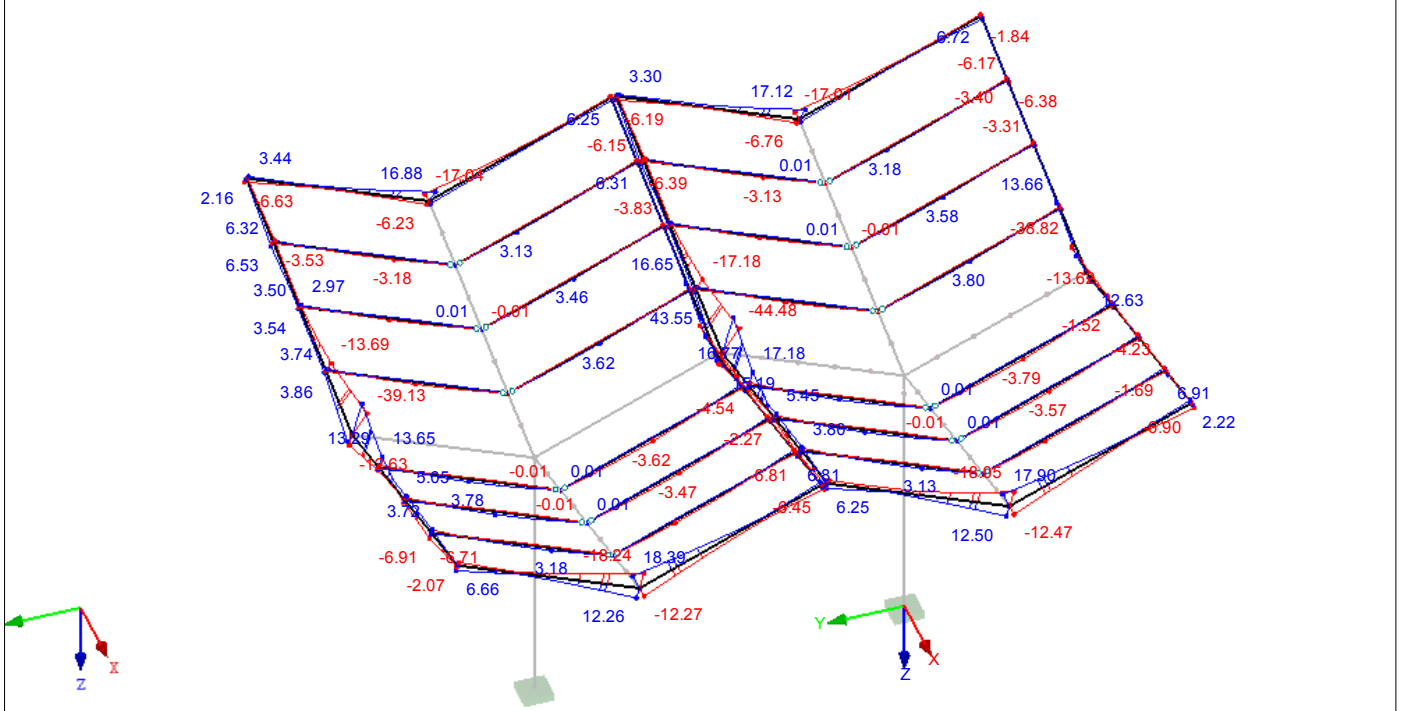

Max M-y: 44.48, Min M-y: -44.48 kNm

SNEDEKRACHTEN M_z - STAAL

RC 1: ULS omhullend
Snedekrachten M-z
Resultaatcombinaties: Max- en Min-waardes

Isometrisch

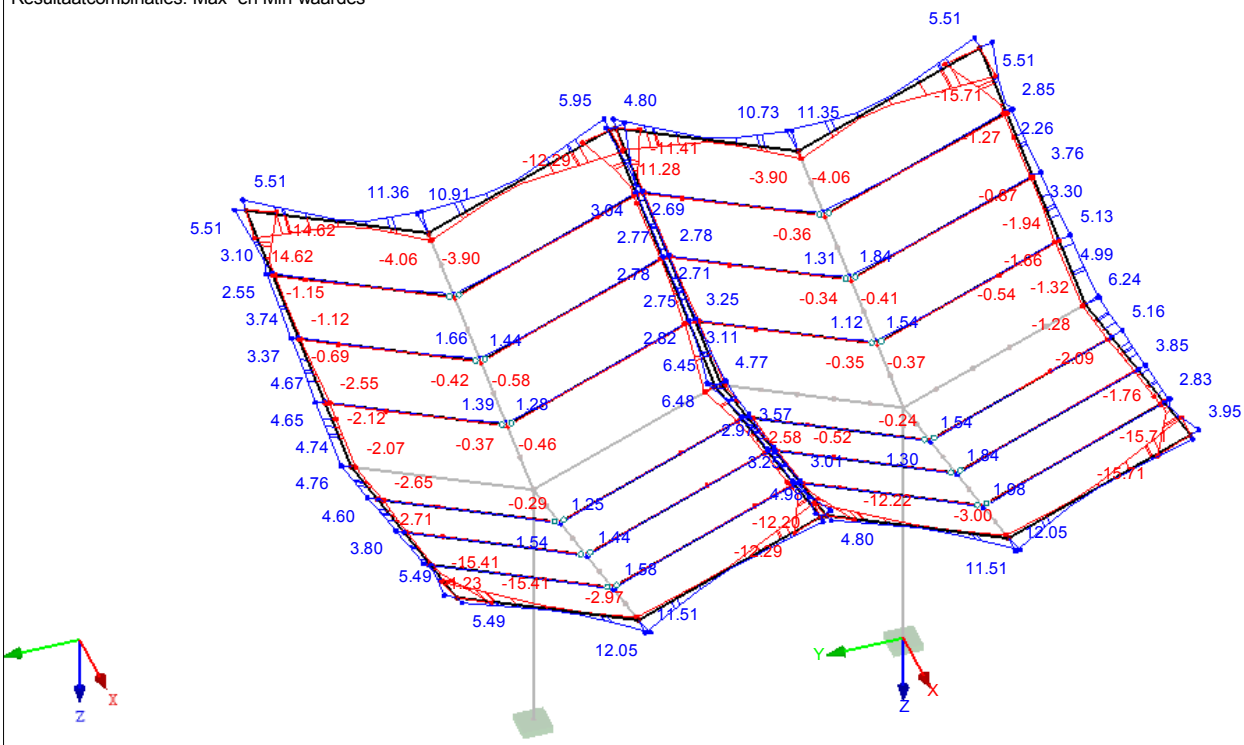

Max M-z: 12.05, Min M-z: -15.71 kNm

SNEDEKRACHTEN N - HOUT

RC 1: ULS omhullend
Snedekrachten N
Resultaatcombinaties: Max- en Min-waardes

Isometrisch

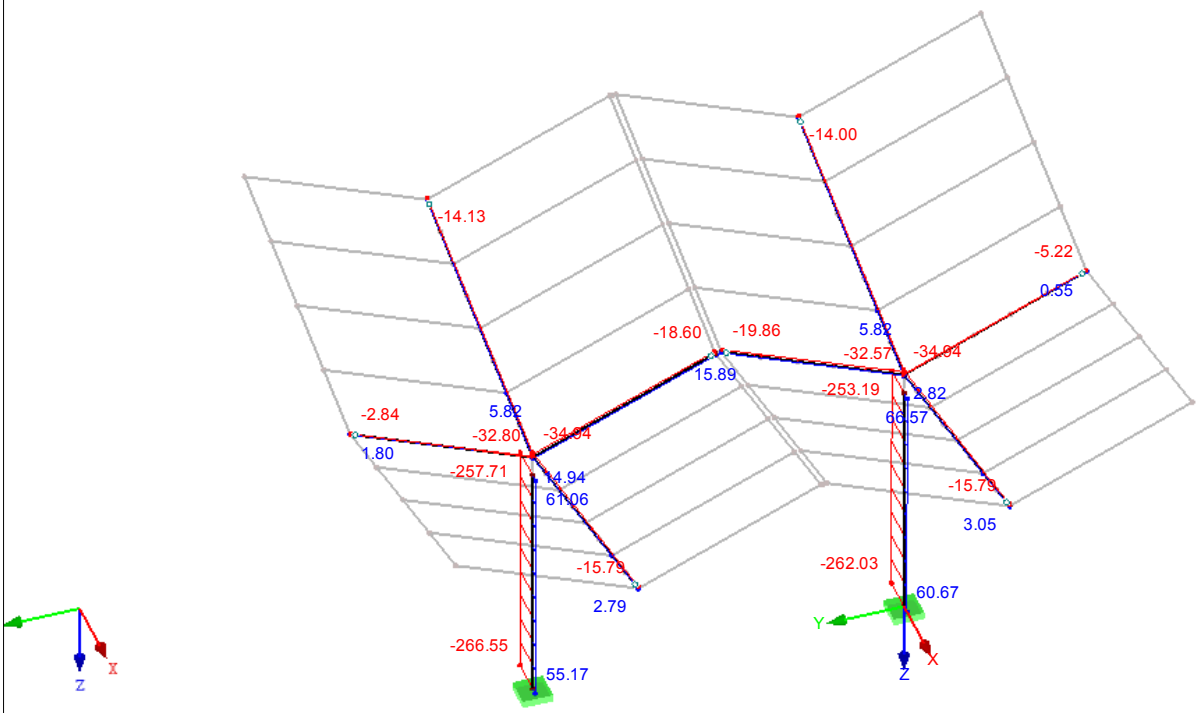

Max N: 66.57, Min N: -266.55 kN

SNEDEKRACHTEN V_y - HOUT

RC 1: ULS omhullend
Snedekrachten V-y
Resultaatcombinaties: Max- en Min-waardes

Isometrisch

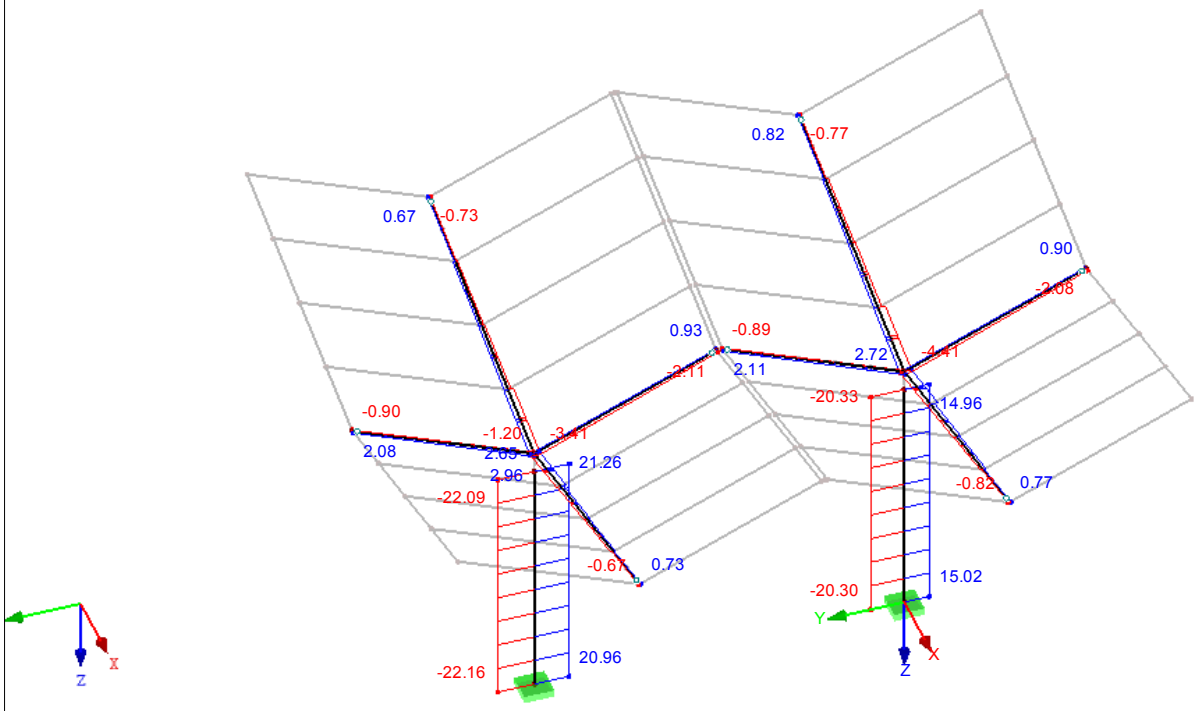

Max V-y: 21.26, Min V-y: -22.16 kN

SNEDEKRACHTEN V_z - HOUT

RC 1: ULS omhullend
Snedekrachten V-z
Resultaatcombinaties: Max- en Min-waardes

Isometrisch

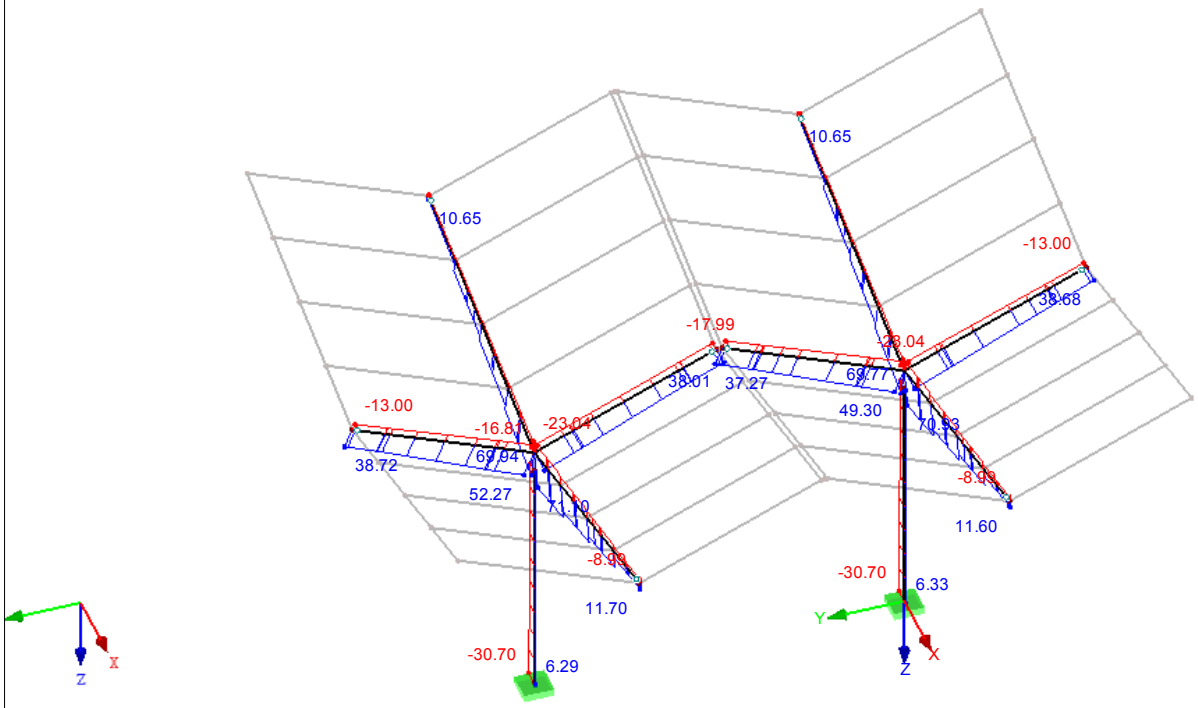

Max V-z: 71.10, Min V-z: -30.70 kN

SNEDEKRACHTEN M_T - HOUT

RC 1: ULS omhullend
Snedekrachten M-T
Resultaatcombinaties: Max- en Min-waardes

Isometrisch

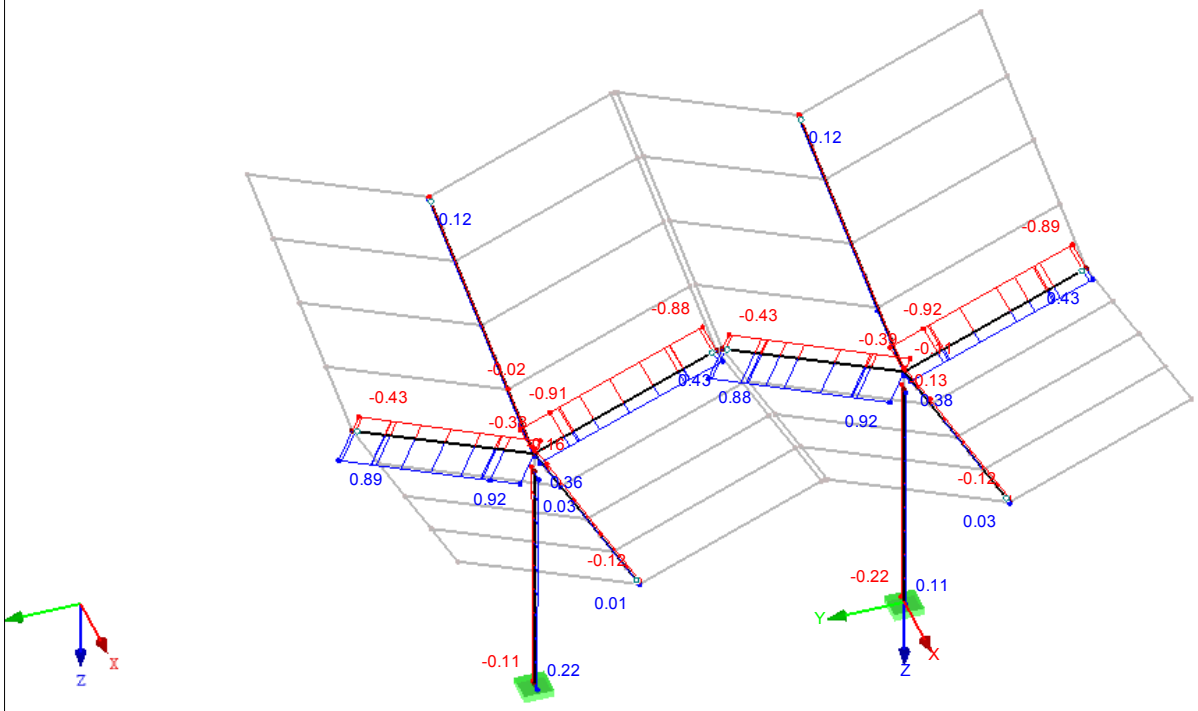

Max M-T: 0.92, Min M-T: -0.92 kNm

SNEDEKRACHTEN M_y - HOUT

RC 1: ULS omhullend
Snedekrachten M-y
Resultaatcombinaties: Max- en Min-waardes

Isometrisch

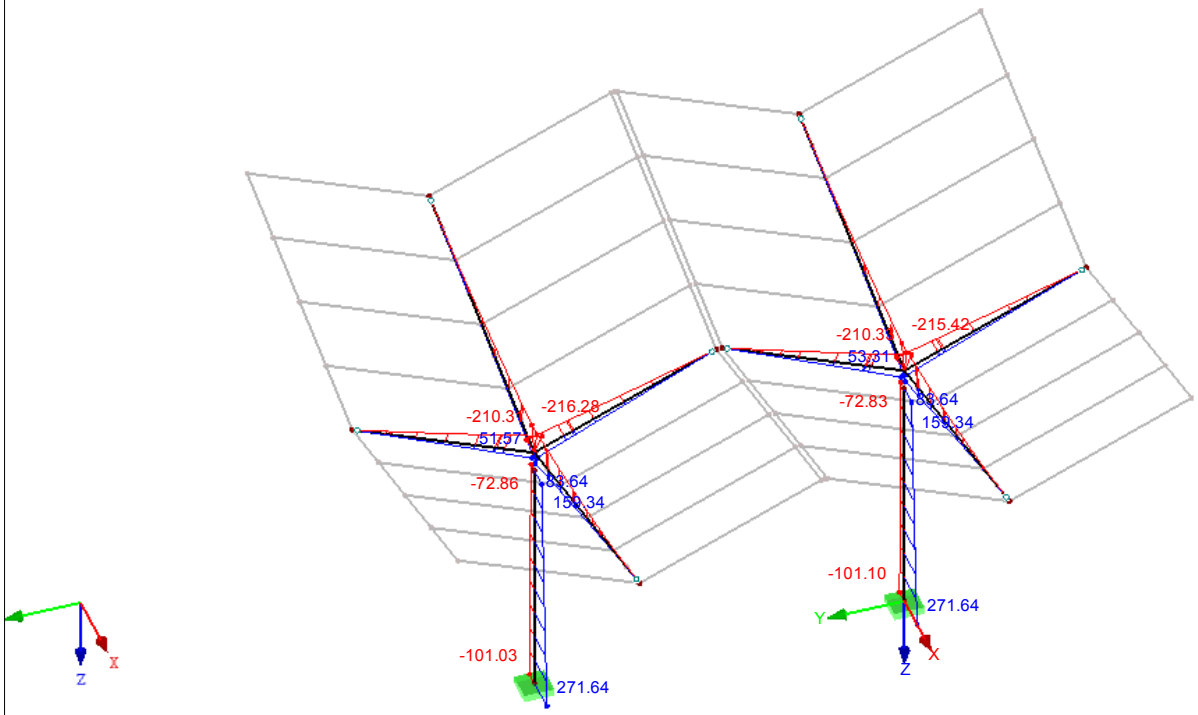

Max M-y: 271.64, Min M-y: -216.28 kNm

SNEDEKRACHTEN M_z - HOUT

RC 1: ULS omhullend
Snedekrachten M-z
Resultaatcombinaties: Max- en Min-waardes

Isometrisch

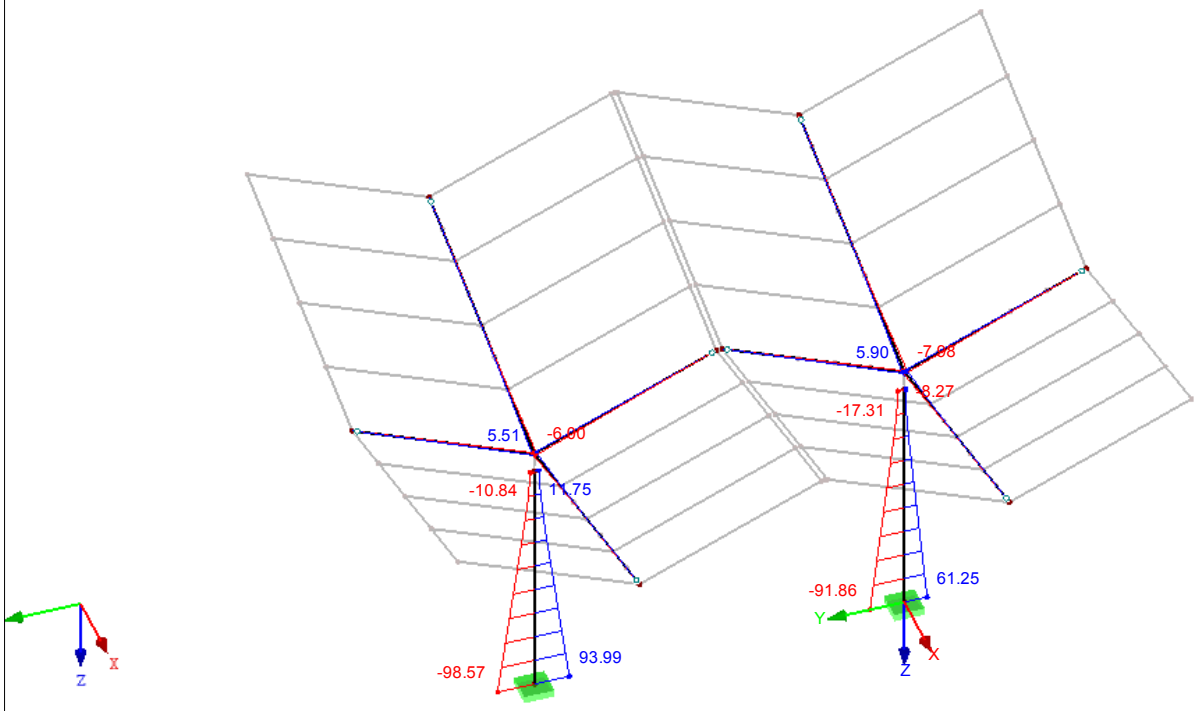

Max M-z: 93.99, Min M-z: -98.57 kNm

GLOBALE VERVORMING UZ INCLUSIEF KRUIP

RC 3: SLS omhullend+kruip
Globale vervormingen u-Z
Resultaatcombinaties: Max- en Min-waardes

Isometrisch

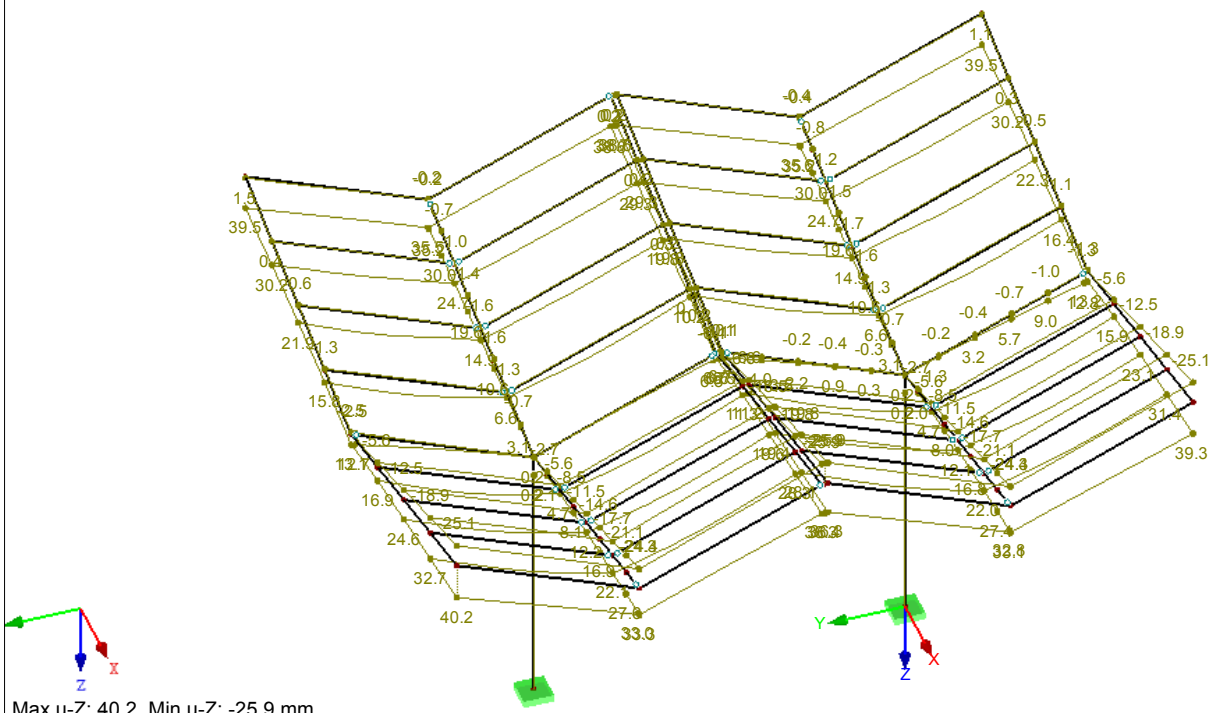

Max u-Z: 40.2, Min u-Z: -25.9 mm
Factor voor verplaatsingen: 16.00

4.12 DOORSNEDES - SNEDEKRACHTEN

Resultaatcombinaties

Staaf No.	RC	Knoop No.	Snede x [m]		Krachten [kN] N	V_y	V_z	Momenten [kNm] M_T	M_y	M_z	Bijbehorend Belastingsgeval
	Snede No. 15: RRO 250x150x6 (koudgevormd)										
10	RC1	7	0.000	Max N	▷ 5.89	1.91	-17.68	-1.77	33.42	6.24	BC 2
			Links	Min N	▷ -4.18	0.87	7.18	1.28	-12.58	-0.09	BC 15
				Max V_y	2.99	▷ 2.88	-5.38	-0.15	13.61	4.62	BC 18
				Min V_y	-1.71	▷ -0.36	-1.02	0.36	-2.86	0.65	BC 23
				Max V_z	-2.91	2.36	▷ 7.30	1.73	-12.54	2.17	BC 14
				Min V_z	4.23	0.23	▷ -20.80	-2.83	38.68	3.75	BC 11
				Max M_T	-2.91	2.36	7.30	▷ 1.73	-12.54	2.17	BC 14
				Min M_T	4.23	0.23	-20.80	▷ -2.83	38.68	3.75	BC 11
				Max M_y	5.38	1.04	-20.74	-2.46	▷ 38.82	5.57	BC 8
				Min M_y	-4.18	0.87	7.18	1.28	▷ -12.58	-0.09	BC 15
				Max M_z	5.89	1.91	-17.68	-1.77	33.42	▷ 6.24	BC 2
				Min M_z	-1.80	0.36	-3.03	-0.76	5.56	▷ -1.32	BC 21
			0.000	Max N	▷ 5.89	1.91	-17.68	-1.77	33.42	6.24	BC 2
			Rechts	Min N	▷ -4.18	0.87	7.18	1.28	-12.58	-0.09	BC 15
				Max V_y	2.99	▷ 2.88	-5.38	-0.15	13.61	4.62	BC 18
				Min V_y	-1.71	▷ -0.36	-1.02	0.36	-2.86	0.65	BC 23
				Max V_z	-2.91	2.36	▷ 7.30	1.73	-12.54	2.17	BC 14
				Min V_z	4.23	0.23	▷ -20.80	-2.83	38.68	3.75	BC 11
				Max M_T	-2.91	2.36	7.30	▷ 1.73	-12.54	2.17	BC 14
				Min M_T	4.23	0.23	-20.80	▷ -2.83	38.68	3.75	BC 11
				Max M_y	5.38	1.04	-20.74	-2.46	▷ 38.82	5.57	BC 8
				Min M_y	-4.18	0.87	7.18	1.28	▷ -12.58	-0.09	BC 15
				Max M_z	5.89	1.91	-17.68	-1.77	33.42	▷ 6.24	BC 2
				Min M_z	-1.80	0.36	-3.03	-0.76	5.56	▷ -1.32	BC 21
			0.583	Max N	▷ 6.08	1.26	-16.97	-1.78	23.27	5.30	BC 2
			Links	Min N	▷ -4.13	0.78	7.08	1.28	-8.41	-0.57	BC 15
				Max V_y	3.09	▷ 2.33	-5.07	-0.15	10.56	3.10	BC 18
				Min V_y	-1.66	▷ -0.44	-0.80	0.36	-3.39	0.88	BC 23
				Max V_z	-2.85	1.85	▷ 7.19	1.73	-8.30	0.94	BC 14
				Min V_z	4.46	-0.05	▷ -20.01	-2.83	26.73	3.68	BC 11
				Max M_T	-2.85	1.85	7.19	▷ 1.73	-8.30	0.94	BC 14
				Min M_T	4.46	-0.05	-20.01	▷ -2.83	26.73	3.68	BC 11
				Max M_y	5.62	0.54	-19.94	-2.46	▷ 26.91	5.09	BC 8
				Min M_y	-4.13	0.78	7.08	1.28	▷ -8.41	-0.57	BC 15
				Max M_z	6.08	1.26	-16.97	-1.78	23.27	▷ 5.30	BC 2
				Min M_z	-1.76	0.28	-2.82	-0.76	3.85	▷ -1.50	BC 21
			0.583	Max N	▷ 6.08	1.26	-16.97	-1.78	23.27	5.30	BC 2
			Rechts	Min N	▷ -4.13	0.78	7.08	1.28	-8.41	-0.57	BC 15
				Max V_y	3.09	▷ 2.33	-5.07	-0.15	10.56	3.10	BC 18
				Min V_y	-1.66	▷ -0.44	-0.80	0.36	-3.39	0.88	BC 23
				Max V_z	-2.85	1.85	▷ 7.19	1.73	-8.30	0.94	BC 14
				Min V_z	4.46	-0.05	▷ -20.01	-2.83	26.73	3.68	BC 11
				Max M_T	-2.85	1.85	7.19	▷ 1.73	-8.30	0.94	BC 14
				Min M_T	4.46	-0.05	-20.01	▷ -2.83	26.73	3.68	BC 11
				Max M_y	5.62	0.54	-19.94	-2.46	▷ 26.91	5.09	BC 8
				Min M_y	-4.13	0.78	7.08	1.28	▷ -8.41	-0.57	BC 15
				Max M_z	6.08	1.26	-16.97	-1.78	23.27	▷ 5.30	BC 2
				Min M_z	-1.76	0.28	-2.82	-0.76	3.85	▷ -1.50	BC 21
			0.645	Max N	▷ 6.11	1.18	-16.85	-1.78	22.22	5.22	BC 2
			Links	Min N	▷ -4.12	0.77	7.04	1.28	-7.97	-0.62	BC 15
				Max V_y	3.10	▷ 2.26	-5.03	-0.15	10.24	2.95	BC 18
				Min V_y	-1.66	▷ -0.45	-0.78	0.36	-3.44	0.91	BC 23
				Max V_z	-2.84	1.79	▷ 7.15	1.73	-7.85	0.83	BC 14
				Min V_z	4.50	-0.11	▷ -19.85	-2.83	25.49	3.69	BC 11
				Max M_T	-2.84	1.79	7.15	▷ 1.73	-7.85	0.83	BC 14
				Min M_T	4.50	-0.11	-19.85	▷ -2.83	25.49	3.69	BC 11
				Max M_y	5.67	0.46	-19.79	-2.46	▷ 25.67	5.06	BC 8
				Min M_y	-4.12	0.77	7.04	1.28	▷ -7.97	-0.62	BC 15
				Max M_z	6.11	1.18	-16.85	-1.78	22.22	▷ 5.22	BC 2
				Min M_z	-1.75	0.27	-2.80	-0.76	3.67	▷ -1.52	BC 21
			0.645	Max N	▷ 6.11	1.18	-16.85	-1.78	22.22	5.22	BC 2
			Rechts	Min N	▷ -4.12	0.77	7.04	1.28	-7.97	-0.62	BC 15
				Max V_y	3.10	▷ 2.26	-5.03	-0.15	10.24	2.95	BC 18
				Min V_y	-1.66	▷ -0.45	-0.78	0.36	-3.44	0.91	BC 23
				Max V_z	-2.84	1.79	▷ 7.15	1.73	-7.85	0.83	BC 14
				Min V_z	4.50	-0.11	▷ -19.85	-2.83	25.49	3.69	BC 11
				Max M_T	-2.84	1.79	7.15	▷ 1.73	-7.85	0.83	BC 14
				Min M_T	4.50	-0.11	-19.85	▷ -2.83	25.49	3.69	BC 11
				Max M_y	5.67	0.46	-19.79	-2.46	▷ 25.67	5.06	BC 8
				Min M_y	-4.12	0.77	7.04	1.28	▷ -7.97	-0.62	BC 15
				Max M_z	6.11	1.18	-16.85	-1.78	22.22	▷ 5.22	BC 2
				Min M_z	-1.75	0.27	-2.80	-0.76	3.67	▷ -1.52	BC 21
			1.290	Max N	▷ 6.30	0.45	-16.06	-1.78	11.67	4.72	BC 2
			Links	Min N	▷ -4.07	0.68	6.96	1.28	-3.48	-1.08	BC 15
				Max V_y	3.20	▷ 1.65	-4.70	-0.15	7.11	1.69	BC 18
				Min V_y	-1.61	▷ -0.55	-0.55	0.36	-3.86	1.24	BC 23
				Max V_z	-2.78	1.24	▷ 7.06	1.73	-3.29	-0.14	BC 14
				Min V_z	4.74	-0.44	▷ -18.95	-2.83	13.05	3.91	BC 11
				Max M_T	-2.78	1.24	7.06	▷ 1.73	-3.29	-0.14	BC 14
				Min M_T	4.74	-0.44	-18.95	▷ -2.83	13.05	3.91	BC 11
				Max M_y	5.26	0.20	-17.02	-2.22	▷ 13.38	4.41	BC 12
				Min M_y	-1.61	-0.55	-0.55	0.36	▷ -3.86	1.24	BC 23
				Max M_z	5.92	-0.11	-18.89	-2.46	13.27	▷ 4.99	BC 8
				Min M_z	-1.70	0.17	-2.57	-0.76	1.95	▷ -1.66	BC 21

4.12 DOORSNEDES - SNEDEKRACHTEN

Resultaatcombinaties

Staaf No.	RC	Knoop No.	Snede x [m]		Krachten [kN] N	V_y	V_z	Momenten [kNm] M_T	M_y	M_z	Bijbehorend Belastingsgeval
10	RC1	22	1.290	Max N	▷ 6.30	0.45	-16.06	-1.78	11.67	4.72	BC 2
			Rechts	Min N	▷ -4.07	0.68	6.96	1.28	-3.48	-1.08	BC 15
				Max V_y	3.20	▷ 1.65	-4.70	-0.15	7.11	1.69	BC 18
				Min V_y	-1.61	▷ -0.55	-0.55	0.36	-3.86	1.24	BC 23
				Max V_z	-2.78	1.24	▷ 7.06	1.73	-3.29	-0.14	BC 14
				Min V_z	4.74	-0.44	▷ -18.95	-2.83	13.05	3.91	BC 11
				Max M_T	-2.78	1.24	7.06	▷ 1.73	-3.29	-0.14	BC 14
				Min M_T	4.74	-0.44	-18.95	▷ -2.83	13.05	3.91	BC 11
				Max M_y	5.26	0.20	-17.02	-2.22	▷ 13.38	4.41	BC 12
				Min M_y	-1.61	-0.55	-0.55	0.36	▷ -3.86	1.24	BC 23
				Max M_z	5.92	-0.11	-18.89	-2.46	13.27	▷ 4.99	BC 8
				Min M_z	-1.70	0.17	-2.57	-0.76	1.95	▷ -1.66	BC 21
11	RC1	3	0.000	Max N	▷ 10.61	8.94	10.09	-2.23	-16.34	11.35	BC 8
			Links	Min N	▷ -5.35	-2.84	-3.39	0.91	5.60	-4.06	BC 15
				Max V_y	10.61	▷ 8.94	10.09	-2.23	-16.34	11.35	BC 8
				Min V_y	-5.35	▷ -2.84	-3.39	0.91	5.60	-4.06	BC 15
				Max V_z	9.65	8.03	▷ 10.27	-2.13	-17.01	10.53	BC 11
				Min V_z	-4.74	-1.79	▷ -3.71	0.61	6.70	-2.98	BC 14
				Max M_T	-1.04	-0.80	3.96	▷ 1.43	-9.39	-1.42	BC 23
				Min M_T	9.54	8.44	8.25	▷ -2.36	-12.63	10.72	BC 12
				Max M_y	-4.74	-1.79	-3.71	0.61	▷ 6.70	-2.98	BC 14
				Min M_y	9.65	8.03	10.27	-2.13	▷ -17.01	10.53	BC 11
				Max M_z	10.61	8.94	10.09	-2.23	-16.34	▷ 11.35	BC 8
				Min M_z	-5.35	-2.84	-3.39	0.91	5.60	▷ -4.06	BC 15
			0.000	Max N	▷ 10.61	8.94	10.09	-2.23	-16.34	11.35	BC 8
			Rechts	Min N	▷ -5.35	-2.84	-3.39	0.91	5.60	-4.06	BC 15
				Max V_y	10.61	▷ 8.94	10.09	-2.23	-16.34	11.35	BC 8
				Min V_y	-5.35	▷ -2.84	-3.39	0.91	5.60	-4.06	BC 15
				Max V_z	9.65	8.03	▷ 10.27	-2.13	-17.01	10.53	BC 11
				Min V_z	-4.74	-1.79	▷ -3.71	0.61	6.70	-2.98	BC 14
				Max M_T	-1.04	-0.80	3.96	▷ 1.43	-9.39	-1.42	BC 23
				Min M_T	9.54	8.44	8.25	▷ -2.36	-12.63	10.72	BC 12
				Max M_y	-4.74	-1.79	-3.71	0.61	▷ 6.70	-2.98	BC 14
				Min M_y	9.65	8.03	10.27	-2.13	▷ -17.01	10.53	BC 11
				Max M_z	10.61	8.94	10.09	-2.23	-16.34	▷ 11.35	BC 8
				Min M_z	-5.35	-2.84	-3.39	0.91	5.60	▷ -4.06	BC 15
			0.583	Max N	▷ 10.93	8.76	9.33	-2.24	-10.64	6.19	BC 8
			Links	Min N	▷ -5.25	-2.88	-3.29	0.92	3.63	-2.39	BC 15
				Max V_y	10.93	▷ 8.76	9.33	-2.24	-10.64	6.19	BC 8
				Min V_y	-5.25	▷ -2.88	-3.29	0.92	3.63	-2.39	BC 15
				Max V_z	9.97	7.86	▷ 9.51	-2.14	-11.21	5.90	BC 11
				Min V_z	-4.64	-1.84	▷ -3.61	0.61	4.54	-1.92	BC 14
				Max M_T	-0.95	-0.84	3.75	▷ 1.42	-7.15	-0.95	BC 23
				Min M_T	9.85	8.27	7.57	▷ -2.37	-7.98	5.85	BC 12
				Max M_y	-4.64	-1.84	-3.61	0.61	▷ 4.54	-1.92	BC 14
				Min M_y	9.97	7.86	9.51	-2.14	▷ -11.21	5.90	BC 11
				Max M_z	10.93	8.76	9.33	-2.24	-10.64	▷ 6.19	BC 8
				Min M_z	-5.25	-2.88	-3.29	0.92	3.63	▷ -2.39	BC 15
			0.583	Max N	▷ 10.93	8.76	9.33	-2.24	-10.64	6.19	BC 8
			Rechts	Min N	▷ -5.25	-2.88	-3.29	0.92	3.63	-2.39	BC 15
				Max V_y	10.93	▷ 8.76	9.33	-2.24	-10.64	6.19	BC 8
				Min V_y	-5.25	▷ -2.88	-3.29	0.92	3.63	-2.39	BC 15
				Max V_z	9.97	7.86	▷ 9.51	-2.14	-11.21	5.90	BC 11
				Min V_z	-4.64	-1.84	▷ -3.61	0.61	4.54	-1.92	BC 14
				Max M_T	-0.95	-0.84	3.75	▷ 1.42	-7.15	-0.95	BC 23
				Min M_T	9.85	8.27	7.57	▷ -2.37	-7.98	5.85	BC 12
				Max M_y	-4.64	-1.84	-3.61	0.61	▷ 4.54	-1.92	BC 14
				Min M_y	9.97	7.86	9.51	-2.14	▷ -11.21	5.90	BC 11
				Max M_z	10.93	8.76	9.33	-2.24	-10.64	▷ 6.19	BC 8
				Min M_z	-5.25	-2.88	-3.29	0.92	3.63	▷ -2.39	BC 15
			0.679	Max N	▷ 11.02	8.72	9.13	-2.24	-9.75	5.35	BC 8
			Links	Min N	▷ -5.23	-2.88	-3.23	0.92	3.31	-2.11	BC 15
				Max V_y	11.02	▷ 8.72	9.13	-2.24	-9.75	5.35	BC 8
				Min V_y	-5.23	▷ -2.88	-3.23	0.92	3.31	-2.11	BC 15
				Max V_z	10.05	7.82	▷ 9.30	-2.14	-10.30	5.14	BC 11
				Min V_z	-4.61	-1.85	▷ -3.54	0.61	4.20	-1.74	BC 14
				Max M_T	-0.93	-0.84	3.70	▷ 1.42	-6.79	-0.87	BC 23
				Min M_T	9.94	8.23	7.39	▷ -2.37	-7.26	5.05	BC 12
				Max M_y	-4.61	-1.85	-3.54	0.61	▷ 4.20	-1.74	BC 14
				Min M_y	10.05	7.82	9.30	-2.14	▷ -10.30	5.14	BC 11
				Max M_z	11.02	8.72	9.13	-2.24	-9.75	▷ 5.35	BC 8
				Min M_z	-5.23	-2.88	-3.23	0.92	3.31	▷ -2.11	BC 15
			0.679	Max N	▷ 11.02	8.72	9.13	-2.24	-9.75	5.35	BC 8
			Rechts	Min N	▷ -5.23	-2.88	-3.23	0.92	3.31	-2.11	BC 15
				Max V_y	11.02	▷ 8.72	9.13	-2.24	-9.75	5.35	BC 8
				Min V_y	-5.23	▷ -2.88	-3.23	0.92	3.31	-2.11	BC 15
				Max V_z	10.05	7.82	▷ 9.30	-2.14	-10.30	5.14	BC 11
				Min V_z	-4.61	-1.85	▷ -3.54	0.61	4.20	-1.74	BC 14
				Max M_T	-0.93	-0.84	3.70	▷ 1.42	-6.79	-0.87	BC 23
				Min M_T	9.94	8.23	7.39	▷ -2.37	-7.26	5.05	BC 12
				Max M_y	-4.61	-1.85	-3.54	0.61	▷ 4.20	-1.74	BC 14
				Min M_y	10.05	7.82	9.30	-2.14	▷ -10.30	5.14	BC 11
				Max M_z	11.02	8.72	9.13	-2.24	-9.75	▷ 5.35	BC 8
				Min M_z	-5.23	-2.88	-3.23	0.92	3.31	▷ -2.11	BC 15
			2.552	Max N	▷ 12.60	7.90	5.08	-2.27	3.52	-10.19	BC 8

4.12 DOORSNEDES - SNEDEKRACHTEN

Resultaatcombinaties

Staaf No.	RC	Knoop No.	Snede x [m]		Krachten [kN] N	V_y	V_z	Momenten [kNm] M_T	M_y	M_z	Bijbehorend Belastingsgeval
11	RC1		Links	Min N	▷ -4.89	-2.99	-2.04	0.92	-1.63	3.39	BC 15
				Max V_y	12.60	▷ 7.90	5.08	-2.27	3.52	-10.19	BC 8
				Min V_y	-4.89	▷ -2.99	-2.04	0.92	-1.63	3.39	BC 15
				Max V_z	11.59	7.03	▷ 5.22	-2.18	3.27	-8.75	BC 11
				Min V_z	-4.19	-2.03	▷ -2.30	0.61	-1.28	1.89	BC 14
				Max M_T	-0.58	-0.94	2.89	▷ 1.40	-0.61	0.80	BC 23
				Min M_T	11.52	7.40	3.85	▷ -2.38	3.23	-9.56	BC 12
				Max M_y	12.60	7.90	5.08	-2.27	▷ 3.52	-10.19	BC 8
				Min M_y	-4.89	-2.99	-2.04	0.92	▷ -1.63	3.39	BC 15
				Max M_z	-4.89	-2.99	-2.04	0.92	-1.63	▷ 3.39	BC 15
				Min M_z	12.60	7.90	5.08	-2.27	3.52	▷ -10.19	BC 8
			2.552	Max N	▷ 12.60	7.90	5.08	-2.27	3.52	-10.19	BC 8
			Rechts	Min N	▷ -4.89	-2.99	-2.04	0.92	-1.63	3.39	BC 15
				Max V_y	12.60	▷ 7.90	5.08	-2.27	3.52	-10.19	BC 8
				Min V_y	-4.89	▷ -2.99	-2.04	0.92	-1.63	3.39	BC 15
				Max V_z	11.59	7.03	▷ 5.22	-2.18	3.27	-8.75	BC 11
				Min V_z	-4.19	-2.03	▷ -2.30	0.61	-1.28	1.89	BC 14
				Max M_T	-0.58	-0.94	2.89	▷ 1.40	-0.61	0.80	BC 23
				Min M_T	11.52	7.40	3.85	▷ -2.38	3.23	-9.56	BC 12
				Max M_y	12.60	7.90	5.08	-2.27	▷ 3.52	-10.19	BC 8
				Min M_y	-4.89	-2.99	-2.04	0.92	▷ -1.63	3.39	BC 15
				Max M_z	-4.89	-2.99	-2.04	0.92	-1.63	▷ 3.39	BC 15
				Min M_z	12.60	7.90	5.08	-2.27	3.52	▷ -10.19	BC 8
			2.581	Max N	▷ 12.62	7.89	5.02	-2.27	3.66	-10.41	BC 8
			Links	Min N	▷ -4.88	-2.99	-2.03	0.92	-1.69	3.47	BC 15
				Max V_y	12.62	▷ 7.89	5.02	-2.27	3.66	-10.41	BC 8
				Min V_y	-4.88	▷ -2.99	-2.03	0.92	-1.69	3.47	BC 15
				Max V_z	11.61	7.02	▷ 5.17	-2.18	3.41	-8.95	BC 11
				Min V_z	-4.18	-2.03	▷ -2.29	0.61	-1.34	1.95	BC 14
				Max M_T	-0.58	-0.94	2.88	▷ 1.40	-0.53	0.82	BC 23
				Min M_T	11.54	7.39	3.79	▷ -2.38	3.33	-9.76	BC 12
				Max M_y	12.62	7.89	5.02	-2.27	▷ 3.66	-10.41	BC 8
				Min M_y	-4.88	-2.99	-2.03	0.92	▷ -1.69	3.47	BC 15
				Max M_z	-4.88	-2.99	-2.03	0.92	-1.69	▷ 3.47	BC 15
				Min M_z	12.62	7.89	5.02	-2.27	3.66	▷ -10.41	BC 8
			2.581	Max N	▷ 12.62	7.89	5.02	-2.27	3.66	-10.41	BC 8
			Rechts	Min N	▷ -4.88	-2.99	-2.03	0.92	-1.69	3.47	BC 15
				Max V_y	12.62	▷ 7.89	5.02	-2.27	3.66	-10.41	BC 8
				Min V_y	-4.88	▷ -2.99	-2.03	0.92	-1.69	3.47	BC 15
				Max V_z	11.61	7.02	▷ 5.16	-2.18	3.42	-8.95	BC 11
				Min V_z	-4.18	-2.03	▷ -2.29	0.61	-1.34	1.95	BC 14
				Max M_T	-0.58	-0.94	2.88	▷ 1.40	-0.53	0.82	BC 23
				Min M_T	11.54	7.39	3.79	▷ -2.38	3.33	-9.76	BC 12
				Max M_y	12.62	7.89	5.02	-2.27	▷ 3.66	-10.41	BC 8
				Min M_y	-4.88	-2.99	-2.03	0.92	▷ -1.69	3.47	BC 15
				Max M_z	-4.88	-2.99	-2.03	0.92	-1.69	▷ 3.47	BC 15
				Min M_z	12.62	7.89	5.02	-2.27	3.66	▷ -10.41	BC 8
			3.260	Max N	▷ 12.92	7.75	4.21	-2.28	6.72	-15.71	BC 8
			Links	Min N	▷ -4.78	-3.03	-1.92	0.92	-2.99	5.51	BC 15
				Max V_y	12.92	▷ 7.75	4.21	-2.28	6.72	-15.71	BC 8
				Min V_y	-4.78	▷ -3.03	-1.92	0.92	-2.99	5.51	BC 15
				Max V_z	11.91	6.88	▷ 4.35	-2.20	6.58	-13.65	BC 11
				Min V_z	-4.07	-2.09	▷ -2.17	0.60	-2.82	3.35	BC 14
				Max M_T	-0.47	-0.97	2.63	▷ 1.39	1.33	1.48	BC 23
				Min M_T	11.85	7.24	3.08	▷ -2.39	5.60	-14.72	BC 12
				Max M_y	12.92	7.75	4.21	-2.28	▷ 6.72	-15.71	BC 8
				Min M_y	-4.78	-3.03	-1.92	0.92	▷ -2.99	5.51	BC 15
				Max M_z	-4.78	-3.03	-1.92	0.92	-2.99	▷ 5.51	BC 15
				Min M_z	12.92	7.75	4.21	-2.28	6.72	▷ -15.71	BC 8
		6	3.260	Max N	▷ 12.92	7.75	4.21	-2.28	6.72	-15.71	BC 8
			Rechts	Min N	▷ -4.78	-3.03	-1.92	0.92	-2.99	5.51	BC 15
				Max V_y	12.92	▷ 7.75	4.21	-2.28	6.72	-15.71	BC 8
				Min V_y	-4.78	▷ -3.03	-1.92	0.92	-2.99	5.51	BC 15
				Max V_z	11.91	6.88	▷ 4.35	-2.20	6.58	-13.65	BC 11
				Min V_z	-4.07	-2.09	▷ -2.17	0.60	-2.82	3.35	BC 14
				Max M_T	-0.47	-0.97	2.63	▷ 1.39	1.33	1.48	BC 23
				Min M_T	11.85	7.24	3.08	▷ -2.39	5.60	-14.72	BC 12
				Max M_y	12.92	7.75	4.21	-2.28	▷ 6.72	-15.71	BC 8
				Min M_y	-4.78	-3.03	-1.92	0.92	▷ -2.99	5.51	BC 15
				Max M_z	-4.78	-3.03	-1.92	0.92	-2.99	▷ 5.51	BC 15
				Min M_z	12.92	7.75	4.21	-2.28	6.72	▷ -15.71	BC 8
12	RC1	7	0.000	Max N	▷ 5.89	1.91	17.68	1.77	-33.42	6.24	BC 2
			Links	Min N	▷ -4.77	1.06	-7.08	-1.14	12.63	-0.05	BC 15
				Max V_y	-0.76	▷ 3.29	-5.32	-1.20	3.63	2.84	BC 22
				Min V_y	0.00	▷ 0.00	0.00	0.00	0.00	0.00	
				Max V_z	3.90	0.33	▷ 20.85	2.91	-38.65	3.77	BC 11
				Min V_z	-2.91	2.36	▷ -7.30	-1.73	12.54	2.17	BC 14
				Max M_T	3.90	0.33	20.85	▷ 2.91	-38.65	3.77	BC 11
				Min M_T	-2.91	2.36	-7.30	▷ -1.73	12.54	2.17	BC 14
				Max M_y	-4.77	1.06	-7.08	-1.14	▷ 12.63	-0.05	BC 15
				Min M_y	5.38	1.04	20.74	2.46	▷ -38.82	5.57	BC 8
				Max M_z	5.89	1.91	17.68	1.77	-33.42	▷ 6.24	BC 2
				Min M_z	-2.42	0.56	3.13	0.92	-5.51	▷ -1.28	BC 21
			0.000	Max N	▷ 5.89	1.91	17.68	1.77	-33.42	6.24	BC 2
			Rechts	Min N	▷ -4.77	1.06	-7.08	-1.14	12.63	-0.05	BC 15

4.12 DOORSNEDES - SNEDEKRACHTEN

Resultaatcombinaties

Staaf No.	RC	Knoop No.	Snede x [m]		Krachten [kN] N	V_y	V_z	Momenten [kNm] M_T	M_y	M_z	Bijbehorend Belastingsgeval
12	RC1			Max V_y	-0.76	▷ 3.29	-5.32	-1.20	3.63	2.84	BC 22
				Min V_y	0.00	▷ 0.00	0.00	0.00	0.00	0.00	
				Max V_z	3.90	0.33	▷ 20.85	2.91	-38.65	3.77	BC 11
				Min V_z	-2.91	2.36	▷ -7.30	-1.73	12.54	2.17	BC 14
				Max M_T	3.90	0.33	20.85	▷ 2.91	-38.65	3.77	BC 11
				Min M_T	-2.91	2.36	-7.30	▷ -1.73	12.54	2.17	BC 14
				Max M_y	-4.77	1.06	-7.08	-1.14	▷ 12.63	-0.05	BC 15
				Min M_y	5.38	1.04	20.74	2.46	▷ -38.82	5.57	BC 8
				Max M_z	5.89	1.91	17.68	1.77	-33.42	▷ 6.24	BC 2
				Min M_z	-2.42	0.56	3.13	0.92	-5.51	▷ -1.28	BC 21
			0.583	Max N	▷ 6.08	1.26	16.97	1.78	-23.27	5.30	BC 2
			Links	Min N	▷ -4.70	0.98	-6.98	-1.13	8.51	-0.65	BC 15
				Max V_y	-0.70	▷ 2.79	-5.21	-1.18	0.53	1.07	BC 22
				Min V_y	4.21	▷ -0.12	19.56	2.63	-24.89	4.25	BC 13
				Max V_z	4.14	0.05	▷ 20.06	2.91	-26.68	3.65	BC 11
				Min V_z	-2.85	1.85	▷ -7.19	-1.73	8.30	0.94	BC 14
				Max M_T	4.14	0.05	20.06	▷ 2.91	-26.68	3.65	BC 11
				Min M_T	-2.85	1.85	-7.19	▷ -1.73	8.30	0.94	BC 14
				Max M_y	-4.70	0.98	-6.98	-1.13	▷ 8.51	-0.65	BC 15
				Min M_y	5.62	0.54	19.94	2.46	▷ -26.91	5.09	BC 8
				Max M_z	6.08	1.26	16.97	1.78	-23.27	▷ 5.30	BC 2
				Min M_z	-2.35	0.48	2.93	0.92	-3.74	▷ -1.58	BC 21
			0.583	Max N	▷ 6.08	1.26	16.97	1.78	-23.27	5.30	BC 2
			Rechts	Min N	▷ -4.70	0.98	-6.98	-1.13	8.51	-0.65	BC 15
				Max V_y	-0.70	▷ 2.79	-5.21	-1.18	0.53	1.07	BC 22
				Min V_y	4.21	▷ -0.12	19.56	2.63	-24.89	4.25	BC 13
				Max V_z	4.14	0.05	▷ 20.06	2.91	-26.68	3.65	BC 11
				Min V_z	-2.85	1.85	▷ -7.19	-1.73	8.30	0.94	BC 14
				Max M_T	4.14	0.05	20.06	▷ 2.91	-26.68	3.65	BC 11
				Min M_T	-2.85	1.85	-7.19	▷ -1.73	8.30	0.94	BC 14
				Max M_y	-4.70	0.98	-6.98	-1.13	▷ 8.51	-0.65	BC 15
				Min M_y	5.62	0.54	19.94	2.46	▷ -26.91	5.09	BC 8
				Max M_z	6.08	1.26	16.97	1.78	-23.27	▷ 5.30	BC 2
				Min M_z	-2.35	0.48	2.93	0.92	-3.74	▷ -1.58	BC 21
			0.645	Max N	▷ 6.11	1.18	16.85	1.78	-22.22	5.22	BC 2
			Links	Min N	▷ -4.69	0.97	-6.94	-1.13	8.07	-0.71	BC 15
				Max V_y	-0.70	▷ 2.73	-5.18	-1.18	0.21	0.90	BC 22
				Min V_y	4.25	▷ -0.18	19.40	2.63	-23.67	4.26	BC 13
				Max V_z	4.19	-0.01	▷ 19.90	2.91	-25.44	3.65	BC 11
				Min V_z	-2.84	1.79	▷ -7.15	-1.73	7.85	0.83	BC 14
				Max M_T	4.19	-0.01	19.90	▷ 2.91	-25.44	3.65	BC 11
				Min M_T	-2.84	1.79	-7.15	▷ -1.73	7.85	0.83	BC 14
				Max M_y	-4.69	0.97	-6.94	-1.13	▷ 8.07	-0.71	BC 15
				Min M_y	5.67	0.46	19.79	2.46	▷ -25.67	5.06	BC 8
				Max M_z	6.11	1.18	16.85	1.78	-22.22	▷ 5.22	BC 2
				Min M_z	-2.34	0.47	2.90	0.92	-3.56	▷ -1.61	BC 21
			0.645	Max N	▷ 6.11	1.18	16.85	1.78	-22.22	5.22	BC 2
			Rechts	Min N	▷ -4.69	0.97	-6.94	-1.13	8.07	-0.71	BC 15
				Max V_y	-0.70	▷ 2.73	-5.18	-1.18	0.21	0.90	BC 22
				Min V_y	4.25	▷ -0.18	19.40	2.63	-23.67	4.26	BC 13
				Max V_z	4.19	-0.01	▷ 19.90	2.91	-25.44	3.65	BC 11
				Min V_z	-2.84	1.79	▷ -7.15	-1.73	7.85	0.83	BC 14
				Max M_T	4.19	-0.01	19.90	▷ 2.91	-25.44	3.65	BC 11
				Min M_T	-2.84	1.79	-7.15	▷ -1.73	7.85	0.83	BC 14
				Max M_y	-4.69	0.97	-6.94	-1.13	▷ 8.07	-0.71	BC 15
				Min M_y	5.67	0.46	19.79	2.46	▷ -25.67	5.06	BC 8
				Max M_z	6.11	1.18	16.85	1.78	-22.22	▷ 5.22	BC 2
				Min M_z	-2.34	0.47	2.90	0.92	-3.56	▷ -1.61	BC 21
			1.290	Max N	▷ 6.30	0.45	16.06	1.78	-11.67	4.72	BC 2
			Links	Min N	▷ -4.61	0.88	-6.85	-1.13	3.66	-1.31	BC 15
				Max V_y	-0.64	▷ 2.17	-5.08	-1.15	-3.07	-0.68	BC 22
				Min V_y	4.50	▷ -0.51	18.50	2.64	-11.52	4.52	BC 13
				Max V_z	4.44	-0.34	▷ 19.00	2.91	-12.96	3.80	BC 11
				Min V_z	-2.78	1.24	▷ -7.06	-1.73	3.29	-0.14	BC 14
				Max M_T	4.44	-0.34	19.00	▷ 2.91	-12.96	3.80	BC 11
				Min M_T	-2.78	1.24	-7.06	▷ -1.73	3.29	-0.14	BC 14
				Max M_y	-4.61	0.88	-6.85	-1.13	▷ 3.66	-1.31	BC 15
				Min M_y	5.92	-0.11	18.89	2.46	▷ -13.27	4.99	BC 8
				Max M_z	5.43	-0.33	18.40	2.34	-11.69	▷ 5.11	BC 12
				Min M_z	-2.27	0.37	2.68	0.92	-1.77	▷ -1.88	BC 21
		25	1.290	Max N	▷ 6.30	0.45	16.06	1.78	-11.67	4.72	BC 2
			Rechts	Min N	▷ -4.61	0.88	-6.85	-1.13	3.66	-1.31	BC 15
				Max V_y	-0.64	▷ 2.17	-5.08	-1.15	-3.07	-0.68	BC 22
				Min V_y	4.50	▷ -0.51	18.50	2.64	-11.52	4.52	BC 13
				Max V_z	4.44	-0.34	▷ 19.00	2.91	-12.96	3.80	BC 11
				Min V_z	-2.78	1.24	▷ -7.06	-1.73	3.29	-0.14	BC 14
				Max M_T	4.44	-0.34	19.00	▷ 2.91	-12.96	3.80	BC 11
				Min M_T	-2.78	1.24	-7.06	▷ -1.73	3.29	-0.14	BC 14
				Max M_y	-4.61	0.88	-6.85	-1.13	▷ 3.66	-1.31	BC 15
				Min M_y	5.92	-0.11	18.89	2.46	▷ -13.27	4.99	BC 8
				Max M_z	5.43	-0.33	18.40	2.34	-11.69	▷ 5.11	BC 12
				Min M_z	-2.27	0.37	2.68	0.92	-1.77	▷ -1.88	BC 21
13	RC1	4	0.000	Max N	▷ 10.91	9.67	-10.05	2.63	16.46	12.05	BC 9
			Links	Min N	▷ -4.74	-1.79	3.71	-0.61	-6.70	-2.98	BC 14

4.12 DOORSNEDES - SNEDEKRACHTEN

Resultaatcombinaties

Staaf No.	RC	Knoop No.	Snede x [m]		Krachten [kN] N	V_y	V_z	Momenten [kNm] M_T	M_y	M_z	Bijbehorend Belastingsgeval
13	RC1			Max V_y	10.91	⊳ 9.67	-10.05	2.63	16.46	12.05	BC 9
				Min V_y	-4.74	⊳ -1.79	3.71	-0.61	-6.70	-2.98	BC 14
				Max V_z	-2.32	1.17	⊳ 5.76	1.47	-12.26	0.54	BC 23
				Min V_z	10.15	8.51	⊳ -10.59	1.87	17.78	10.73	BC 12
				Max M_T	8.64	8.53	-8.88	⊳ 2.71	14.91	10.68	BC 5
				Min M_T	-4.74	-1.79	3.71	⊳ -0.61	-6.70	-2.98	BC 14
				Max M_y	10.44	9.25	-10.56	2.27	⊳ 17.90	11.43	BC 13
				Min M_y	-2.89	-0.24	5.69	0.71	⊳ -12.47	-0.75	BC 22
				Max M_z	10.91	9.67	-10.05	2.63	16.46	⊳ 12.05	BC 9
				Min M_z	-4.74	-1.79	3.71	-0.61	-6.70	⊳ -2.98	BC 14
			0.000	Max N	⊳ 10.91	9.67	-10.05	2.63	16.46	12.05	BC 9
			Rechts	Min N	⊳ -4.74	-1.79	3.71	-0.61	-6.70	-2.98	BC 14
				Max V_y	10.91	⊳ 9.67	-10.05	2.63	16.46	12.05	BC 9
				Min V_y	-4.74	⊳ -1.79	3.71	-0.61	-6.70	-2.98	BC 14
				Max V_z	-2.32	1.17	⊳ 5.76	1.47	-12.26	0.54	BC 23
				Min V_z	10.15	8.51	⊳ -10.59	1.87	17.78	10.73	BC 12
				Max M_T	8.64	8.53	-8.88	⊳ 2.71	14.91	10.68	BC 5
				Min M_T	-4.74	-1.79	3.71	⊳ -0.61	-6.70	-2.98	BC 14
				Max M_y	10.44	9.25	-10.56	2.27	⊳ 17.90	11.43	BC 13
				Min M_y	-2.89	-0.24	5.69	0.71	⊳ -12.47	-0.75	BC 22
				Max M_z	10.91	9.67	-10.05	2.63	16.46	⊳ 12.05	BC 9
				Min M_z	-4.74	-1.79	3.71	-0.61	-6.70	⊳ -2.98	BC 14
			0.583	Max N	⊳ 11.22	9.29	-9.30	2.63	10.77	6.52	BC 9
			Links	Min N	⊳ -4.64	-1.84	3.61	-0.61	-4.54	-1.92	BC 14
				Max V_y	11.22	⊳ 9.29	-9.30	2.63	10.77	6.52	BC 9
				Min V_y	-4.64	⊳ -1.84	3.61	-0.61	-4.54	-1.92	BC 14
				Max V_z	-2.22	0.71	⊳ 5.65	1.48	-8.92	-0.02	BC 23
				Min V_z	10.47	8.34	⊳ -9.83	1.88	11.79	5.81	BC 12
				Max M_T	8.88	7.97	-8.19	⊳ 2.72	9.89	5.87	BC 5
				Min M_T	-4.64	-1.84	3.61	⊳ -0.61	-4.54	-1.92	BC 14
				Max M_y	9.26	7.87	-9.15	1.89	⊳ 11.98	5.20	BC 7
				Min M_y	-2.78	-0.28	5.59	0.72	⊳ -9.16	-0.60	BC 22
				Max M_z	11.22	9.29	-9.30	2.63	10.77	⊳ 6.52	BC 9
				Min M_z	-4.64	-1.84	3.61	-0.61	-4.54	⊳ -1.92	BC 14
			0.583	Max N	⊳ 11.22	9.29	-9.30	2.63	10.77	6.52	BC 9
			Rechts	Min N	⊳ -4.64	-1.84	3.61	-0.61	-4.54	-1.92	BC 14
				Max V_y	11.22	⊳ 9.29	-9.30	2.63	10.77	6.52	BC 9
				Min V_y	-4.64	⊳ -1.84	3.61	-0.61	-4.54	-1.92	BC 14
				Max V_z	-2.22	0.71	⊳ 5.65	1.48	-8.92	-0.02	BC 23
				Min V_z	10.47	8.34	⊳ -9.83	1.88	11.79	5.81	BC 12
				Max M_T	8.88	7.97	-8.19	⊳ 2.72	9.89	5.87	BC 5
				Min M_T	-4.64	-1.84	3.61	⊳ -0.61	-4.54	-1.92	BC 14
				Max M_y	9.26	7.87	-9.15	1.89	⊳ 11.98	5.20	BC 7
				Min M_y	-2.78	-0.28	5.59	0.72	⊳ -9.16	-0.60	BC 22
				Max M_z	11.22	9.29	-9.30	2.63	10.77	⊳ 6.52	BC 9
				Min M_z	-4.64	-1.84	3.61	-0.61	-4.54	⊳ -1.92	BC 14
			0.679	Max N	⊳ 11.31	9.21	-9.09	2.63	9.89	5.63	BC 9
			Links	Min N	⊳ -4.61	-1.85	3.54	-0.61	-4.20	-1.74	BC 14
				Max V_y	11.31	⊳ 9.21	-9.09	2.63	9.89	5.63	BC 9
				Min V_y	-4.61	⊳ -1.85	3.54	-0.61	-4.20	-1.74	BC 14
				Max V_z	-2.20	0.62	⊳ 5.59	1.48	-8.38	-0.08	BC 23
				Min V_z	10.55	8.30	⊳ -9.63	1.88	10.85	5.01	BC 12
				Max M_T	8.94	7.86	-8.01	⊳ 2.72	9.11	5.11	BC 5
				Min M_T	-4.61	-1.85	3.54	⊳ -0.61	-4.20	-1.74	BC 14
				Max M_y	9.32	7.77	-8.97	1.89	⊳ 11.10	4.45	BC 7
				Min M_y	-2.76	-0.29	5.52	0.72	⊳ -8.63	-0.57	BC 22
				Max M_z	11.31	9.21	-9.09	2.63	9.89	⊳ 5.63	BC 9
				Min M_z	-4.61	-1.85	3.54	-0.61	-4.20	⊳ -1.74	BC 14
			0.679	Max N	⊳ 11.31	9.21	-9.09	2.63	9.89	5.63	BC 9
			Rechts	Min N	⊳ -4.61	-1.85	3.54	-0.61	-4.20	-1.74	BC 14
				Max V_y	11.31	⊳ 9.21	-9.09	2.63	9.89	5.63	BC 9
				Min V_y	-4.61	⊳ -1.85	3.54	-0.61	-4.20	-1.74	BC 14
				Max V_z	-2.20	0.62	⊳ 5.59	1.48	-8.38	-0.08	BC 23
				Min V_z	10.55	8.30	⊳ -9.63	1.88	10.85	5.01	BC 12
				Max M_T	8.94	7.86	-8.01	⊳ 2.72	9.11	5.11	BC 5
				Min M_T	-4.61	-1.85	3.54	⊳ -0.61	-4.20	-1.74	BC 14
				Max M_y	9.32	7.77	-8.97	1.89	⊳ 11.10	4.45	BC 7
				Min M_y	-2.76	-0.29	5.52	0.72	⊳ -8.63	-0.57	BC 22
				Max M_z	11.31	9.21	-9.09	2.63	9.89	⊳ 5.63	BC 9
				Min M_z	-4.61	-1.85	3.54	-0.61	-4.20	⊳ -1.74	BC 14
			2.552	Max N	⊳ 12.85	7.67	-5.04	2.66	-3.31	-10.15	BC 9
			Links	Min N	⊳ -4.19	-2.03	2.30	-0.61	1.28	1.89	BC 14
				Max V_y	12.60	⊳ 7.90	-5.08	2.27	-3.52	-10.19	BC 8
				Min V_y	-3.70	⊳ -2.50	2.37	0.17	1.66	1.97	BC 15
				Max V_z	-1.86	-0.95	⊳ 4.35	1.52	0.93	0.23	BC 23
				Min V_z	12.13	7.48	⊳ -5.57	1.93	-3.35	-9.75	BC 12
				Max M_T	10.07	5.84	-4.42	⊳ 2.74	-2.51	-7.70	BC 5
				Min M_T	-4.19	-2.03	2.30	⊳ -0.61	1.28	1.89	BC 14
				Max M_y	-3.70	-2.50	2.37	0.17	⊳ 1.66	1.97	BC 15
				Min M_y	12.60	7.90	-5.08	2.27	⊳ -3.52	-10.19	BC 8
				Max M_z	-3.70	-2.50	2.37	0.17	1.66	⊳ 1.97	BC 15
				Min M_z	12.60	7.90	-5.08	2.27	-3.52	⊳ -10.19	BC 8
			2.552	Max N	⊳ 12.85	7.67	-5.04	2.66	-3.31	-10.15	BC 9
			Rechts	Min N	⊳ -4.19	-2.03	2.30	-0.61	1.28	1.89	BC 14

4.12 DOORSNEDES - SNEDEKRACHTEN

Resultaatcombinaties

Staaf No.	RC	Knoop No.	Snede x [m]		Krachten [kN] N	V_y	V_z	Momenten [kNm] M_T	M_y	M_z	Bijbehorend Belastingsgeval
13	RC1			Max V_y	12.60	⊳ 7.90	-5.08	2.27	-3.52	-10.19	BC 8
				Min V_y	-3.70	⊳ -2.50	2.37	0.17	1.66	1.97	BC 15
				Max V_z	-1.86	-0.95	⊳ 4.35	1.52	0.93	0.23	BC 23
				Min V_z	12.13	7.48	⊳ -5.57	1.93	-3.35	-9.75	BC 12
				Max M_T	10.07	5.84	-4.42	⊳ 2.74	-2.51	-7.70	BC 5
				Min M_T	-4.19	-2.03	2.30	⊳ -0.61	1.28	1.89	BC 14
				Max M_y	-3.70	-2.50	2.37	0.17	⊳ 1.66	1.97	BC 15
				Min M_y	12.60	7.90	-5.08	2.27	⊳ -3.52	-10.19	BC 8
				Max M_z	-3.70	-2.50	2.37	0.17	1.66	⊳ 1.97	BC 15
				Min M_z	12.60	7.90	-5.08	2.27	-3.52	⊳ -10.19	BC 8
			2.581	Max N	⊳ 12.87	7.65	-4.98	2.66	-3.45	-10.37	BC 9
			Links	Min N	⊳ -4.18	-2.03	2.29	-0.61	1.34	1.95	BC 14
				Max V_y	12.62	⊳ 7.89	-5.02	2.27	-3.66	-10.41	BC 8
				Min V_y	-3.70	⊳ -2.53	2.35	0.17	1.73	2.05	BC 15
				Max V_z	-1.86	-0.98	⊳ 4.33	1.52	1.06	0.26	BC 23
				Min V_z	12.16	7.47	⊳ -5.51	1.93	-3.50	-9.96	BC 12
				Max M_T	10.09	5.81	-4.37	⊳ 2.74	-2.63	-7.87	BC 5
				Min M_T	-4.18	-2.03	2.29	⊳ -0.61	1.34	1.95	BC 14
				Max M_y	-3.70	-2.53	2.35	0.17	⊳ 1.73	2.05	BC 15
				Min M_y	12.62	7.89	-5.02	2.27	⊳ -3.66	-10.41	BC 8
				Max M_z	-3.70	-2.53	2.35	0.17	1.73	⊳ 2.05	BC 15
				Min M_z	12.62	7.89	-5.02	2.27	-3.66	⊳ -10.41	BC 8
			2.581	Max N	⊳ 12.87	7.65	-4.98	2.66	-3.45	-10.37	BC 9
			Rechts	Min N	⊳ -4.18	-2.03	2.29	-0.61	1.34	1.95	BC 14
				Max V_y	12.62	⊳ 7.89	-5.02	2.27	-3.66	-10.41	BC 8
				Min V_y	-3.70	⊳ -2.53	2.35	0.17	1.73	2.05	BC 15
				Max V_z	-1.86	-0.98	⊳ 4.33	1.52	1.06	0.26	BC 23
				Min V_z	12.16	7.47	⊳ -5.51	1.93	-3.50	-9.96	BC 12
				Max M_T	10.09	5.81	-4.37	⊳ 2.74	-2.63	-7.87	BC 5
				Min M_T	-4.18	-2.03	2.29	⊳ -0.61	1.34	1.95	BC 14
				Max M_y	-3.70	-2.53	2.35	0.17	⊳ 1.73	2.05	BC 15
				Min M_y	12.62	7.89	-5.02	2.27	⊳ -3.66	-10.41	BC 8
				Max M_z	-3.70	-2.53	2.35	0.17	1.73	⊳ 2.05	BC 15
				Min M_z	12.62	7.89	-5.02	2.27	-3.66	⊳ -10.41	BC 8
			3.260	Max N	⊳ 13.16	7.26	-4.17	2.67	-6.48	-15.42	BC 9
			Links	Min N	⊳ -4.07	-2.09	2.17	-0.60	2.82	3.35	BC 14
				Max V_y	12.92	⊳ 7.75	-4.21	2.28	-6.72	-15.71	BC 8
				Min V_y	-3.59	⊳ -3.07	2.24	0.17	3.25	3.95	BC 15
				Max V_z	-1.76	-1.52	⊳ 4.22	1.53	3.93	1.11	BC 23
				Min V_z	12.46	7.33	⊳ -4.71	1.95	-6.90	-14.97	BC 12
				Max M_T	10.33	5.19	-3.62	⊳ 2.75	-5.29	-11.60	BC 5
				Min M_T	-4.07	-2.09	2.17	⊳ -0.60	2.82	3.35	BC 14
				Max M_y	-1.76	-1.52	4.22	1.53	⊳ 3.93	1.11	BC 23
				Min M_y	12.46	7.33	-4.71	1.95	⊳ -6.90	-14.97	BC 12
				Max M_z	-3.59	-3.07	2.24	0.17	3.25	⊳ 3.95	BC 15
				Min M_z	12.92	7.75	-4.21	2.28	-6.72	⊳ -15.71	BC 8
		8	3.260	Max N	⊳ 13.16	7.26	-4.17	2.67	-6.48	-15.42	BC 9
			Rechts	Min N	⊳ -4.07	-2.09	2.17	-0.60	2.82	3.35	BC 14
				Max V_y	12.92	⊳ 7.75	-4.21	2.28	-6.72	-15.71	BC 8
				Min V_y	-3.59	⊳ -3.07	2.24	0.17	3.25	3.95	BC 15
				Max V_z	-1.76	-1.52	⊳ 4.22	1.53	3.93	1.11	BC 23
				Min V_z	12.46	7.33	⊳ -4.71	1.95	-6.90	-14.97	BC 12
				Max M_T	10.33	5.19	-3.62	⊳ 2.75	-5.29	-11.60	BC 5
				Min M_T	-4.07	-2.09	2.17	⊳ -0.60	2.82	3.35	BC 14
				Max M_y	-1.76	-1.52	4.22	1.53	⊳ 3.93	1.11	BC 23
				Min M_y	12.46	7.33	-4.71	1.95	⊳ -6.90	-14.97	BC 12
				Max M_z	-3.59	-3.07	2.24	0.17	3.25	⊳ 3.95	BC 15
				Min M_z	12.92	7.75	-4.21	2.28	-6.72	⊳ -15.71	BC 8
14	RC1	12	0.000	Max N	⊳ 6.18	-0.86	19.52	3.74	-39.14	-0.33	BC 2
			Links	Min N	⊳ -10.54	3.78	-7.17	-2.12	11.62	6.45	BC 21
				Max V_y	-10.54	⊳ 3.78	-7.17	-2.12	11.62	6.45	BC 21
				Min V_y	1.88	⊳ -1.42	1.53	0.23	1.39	-1.53	BC 22
				Max V_z	4.21	-0.48	⊳ 22.42	4.03	-44.48	0.94	BC 8
				Min V_z	-3.53	0.95	⊳ -7.56	-1.57	13.97	0.59	BC 15
				Max M_T	4.21	-0.48	22.42	⊳ 4.03	-44.48	0.94	BC 8
				Min M_T	-10.54	3.78	-7.17	⊳ -2.12	11.62	6.45	BC 21
				Max M_y	-3.53	0.95	-7.56	-1.57	⊳ 13.97	0.59	BC 15
				Min M_y	4.21	-0.48	22.42	4.03	⊳ -44.48	0.94	BC 8
				Max M_z	-10.54	3.78	-7.17	-2.12	11.62	⊳ 6.45	BC 21
				Min M_z	-0.14	-0.11	-6.94	-0.89	12.12	⊳ -1.77	BC 14
			0.000	Max N	⊳ 6.18	-0.86	19.52	3.74	-39.14	-0.33	BC 2
			Rechts	Min N	⊳ -10.54	3.78	-7.17	-2.12	11.62	6.45	BC 21
				Max V_y	-10.54	⊳ 3.78	-7.17	-2.12	11.62	6.45	BC 21
				Min V_y	1.88	⊳ -1.42	1.53	0.23	1.39	-1.53	BC 22
				Max V_z	4.21	-0.48	⊳ 22.42	4.03	-44.48	0.94	BC 8
				Min V_z	-3.53	0.95	⊳ -7.56	-1.57	13.97	0.59	BC 15
				Max M_T	4.21	-0.48	22.42	⊳ 4.03	-44.48	0.94	BC 8
				Min M_T	-10.54	3.78	-7.17	⊳ -2.12	11.62	6.45	BC 21
				Max M_y	-3.53	0.95	-7.56	-1.57	⊳ 13.97	0.59	BC 15
				Min M_y	4.21	-0.48	22.42	4.03	⊳ -44.48	0.94	BC 8
				Max M_z	-10.54	3.78	-7.17	-2.12	11.62	⊳ 6.45	BC 21
				Min M_z	-0.14	-0.11	-6.94	-0.89	12.12	⊳ -1.77	BC 14
			0.583	Max N	⊳ 6.38	-1.06	18.79	3.74	-27.93	0.23	BC 2
			Links	Min N	⊳ -10.49	3.71	-7.08	-2.13	7.44	4.27	BC 21

4.12 DOORSNEDES - SNEDEKRACHTEN

Resultaatcombinaties

Staaf No.	RC	Knoop No.	Snede x [m]		Krachten [kN] N	V_y	V_z	Momenten [kNm] M_T	M_y	M_z	Bijbehorend Belastingsgeval
14	RC1			Max V_y	-10.49	3.71	-7.08	-2.13	7.44	4.27	BC 21
				Min V_y	1.94	-1.50	1.32	0.24	2.23	-0.68	BC 22
				Max V_z	4.46	-0.75	21.62	4.03	-31.59	1.29	BC 8
				Min V_z	-3.48	0.86	-7.46	-1.57	9.56	0.06	BC 15
				Max M_T	4.46	-0.75	21.62	4.03	-31.59	1.29	BC 8
				Min M_T	-10.49	3.71	-7.08	-2.13	7.44	4.27	BC 21
				Max M_y	-3.48	0.86	-7.46	-1.57	9.56	0.06	BC 15
				Min M_y	4.46	-0.75	21.62	4.03	-31.59	1.29	BC 8
				Max M_z	-10.49	3.71	-7.08	-2.13	7.44	4.27	BC 21
				Min M_z	-0.08	-0.18	-6.84	-0.89	8.08	-1.69	BC 14
			0.583	Max N	6.38	-1.06	18.79	3.74	-27.93	0.23	BC 2
			Rechts	Min N	-10.49	3.71	-7.08	-2.13	7.44	4.27	BC 21
				Max V_y	-10.49	3.71	-7.08	-2.13	7.44	4.27	BC 21
				Min V_y	1.94	-1.50	1.32	0.24	2.23	-0.68	BC 22
				Max V_z	4.46	-0.75	21.62	4.03	-31.59	1.29	BC 8
				Min V_z	-3.48	0.86	-7.46	-1.57	9.56	0.06	BC 15
				Max M_T	4.46	-0.75	21.62	4.03	-31.59	1.29	BC 8
				Min M_T	-10.49	3.71	-7.08	-2.13	7.44	4.27	BC 21
				Max M_y	-3.48	0.86	-7.46	-1.57	9.56	0.06	BC 15
				Min M_y	4.46	-0.75	21.62	4.03	-31.59	1.29	BC 8
				Max M_z	-10.49	3.71	-7.08	-2.13	7.44	4.27	BC 21
				Min M_z	-0.08	-0.18	-6.84	-0.89	8.08	-1.69	BC 14
			0.645	Max N	6.41	-1.10	18.66	3.74	-26.76	0.30	BC 2
			Links	Min N	-10.48	3.70	-7.04	-2.13	7.00	4.04	BC 21
				Max V_y	-10.48	3.70	-7.04	-2.13	7.00	4.04	BC 21
				Min V_y	1.94	-1.51	1.29	0.24	2.31	-0.59	BC 22
				Max V_z	4.50	-0.80	21.47	4.03	-30.25	1.34	BC 8
				Min V_z	-3.47	0.85	-7.43	-1.57	9.10	0.01	BC 15
				Max M_T	4.50	-0.80	21.47	4.03	-30.25	1.34	BC 8
				Min M_T	-10.48	3.70	-7.04	-2.13	7.00	4.04	BC 21
				Max M_y	-3.47	0.85	-7.43	-1.57	9.10	0.01	BC 15
				Min M_y	4.50	-0.80	21.47	4.03	-30.25	1.34	BC 8
				Max M_z	-10.48	3.70	-7.04	-2.13	7.00	4.04	BC 21
				Min M_z	-0.07	-0.19	-6.80	-0.89	7.66	-1.68	BC 14
			0.645	Max N	6.41	-1.10	18.66	3.74	-26.76	0.30	BC 2
			Rechts	Min N	-10.48	3.70	-7.04	-2.13	7.00	4.04	BC 21
				Max V_y	-10.48	3.70	-7.04	-2.13	7.00	4.04	BC 21
				Min V_y	1.94	-1.51	1.29	0.24	2.31	-0.59	BC 22
				Max V_z	4.50	-0.80	21.47	4.03	-30.25	1.34	BC 8
				Min V_z	-3.47	0.85	-7.43	-1.57	9.10	0.01	BC 15
				Max M_T	4.50	-0.80	21.47	4.03	-30.25	1.34	BC 8
				Min M_T	-10.48	3.70	-7.04	-2.13	7.00	4.04	BC 21
				Max M_y	-3.47	0.85	-7.43	-1.57	9.10	0.01	BC 15
				Min M_y	4.50	-0.80	21.47	4.03	-30.25	1.34	BC 8
				Max M_z	-10.48	3.70	-7.04	-2.13	7.00	4.04	BC 21
				Min M_z	-0.07	-0.19	-6.80	-0.89	7.66	-1.68	BC 14
			1.290	Max N	6.61	-1.33	17.87	3.75	-15.04	1.11	BC 2
			Links	Min N	-10.43	3.61	-6.96	-2.13	2.52	1.69	BC 21
				Max V_y	-10.43	3.61	-6.96	-2.13	2.52	1.69	BC 21
				Min V_y	2.00	-1.59	1.06	0.25	3.07	0.41	BC 22
				Max V_z	4.76	-1.12	20.56	4.04	-16.77	2.00	BC 8
				Min V_z	-3.42	0.76	-7.34	-1.57	4.36	-0.50	BC 15
				Max M_T	4.76	-1.12	20.56	4.04	-16.77	2.00	BC 8
				Min M_T	-10.43	3.61	-6.96	-2.13	2.52	1.69	BC 21
				Max M_y	-3.42	0.76	-7.34	-1.57	4.36	-0.50	BC 15
				Min M_y	4.76	-1.12	20.56	4.04	-16.77	2.00	BC 8
				Max M_z	0.39	0.21	17.85	3.07	-14.91	2.82	BC 11
				Min M_z	-0.01	-0.27	-6.72	-0.89	3.33	-1.53	BC 14
		28	1.290	Max N	6.61	-1.33	17.87	3.75	-15.04	1.11	BC 2
			Rechts	Min N	-10.43	3.61	-6.96	-2.13	2.52	1.69	BC 21
				Max V_y	-10.43	3.61	-6.96	-2.13	2.52	1.69	BC 21
				Min V_y	2.00	-1.59	1.06	0.25	3.07	0.41	BC 22
				Max V_z	4.76	-1.12	20.56	4.04	-16.77	2.00	BC 8
				Min V_z	-3.42	0.76	-7.34	-1.57	4.36	-0.50	BC 15
				Max M_T	4.76	-1.12	20.56	4.04	-16.77	2.00	BC 8
				Min M_T	-10.43	3.61	-6.96	-2.13	2.52	1.69	BC 21
				Max M_y	-3.42	0.76	-7.34	-1.57	4.36	-0.50	BC 15
				Min M_y	4.76	-1.12	20.56	4.04	-16.77	2.00	BC 8
				Max M_z	0.39	0.21	17.85	3.07	-14.91	2.82	BC 11
				Min M_z	-0.01	-0.27	-6.72	-0.89	3.33	-1.53	BC 14
15	RC1	3	0.000	Max N	10.20	7.23	-9.93	3.72	16.49	10.73	BC 8
			Links	Min N	-5.31	-2.46	3.37	-1.29	-5.65	-3.90	BC 15
				Max V_y	9.99	7.31	-9.33	3.48	16.56	10.61	BC 10
				Min V_y	-5.31	-2.46	3.37	-1.29	-5.65	-3.90	BC 15
				Max V_z	-5.23	-2.23	3.81	-0.56	-6.76	-3.00	BC 14
				Min V_z	10.16	7.10	-10.16	3.35	17.05	10.26	BC 9
				Max M_T	9.14	6.80	-8.10	3.80	12.77	10.13	BC 12
				Min M_T	-1.03	-0.69	-3.96	-1.55	9.38	-1.37	BC 23
				Max M_y	9.94	7.18	-9.56	3.11	17.12	10.13	BC 11
				Min M_y	-5.23	-2.23	3.81	-0.56	-6.76	-3.00	BC 14
				Max M_z	10.20	7.23	-9.93	3.72	16.49	10.73	BC 8
				Min M_z	-5.31	-2.46	3.37	-1.29	-5.65	-3.90	BC 15
			0.000	Max N	10.20	7.23	-9.93	3.72	16.49	10.73	BC 8
			Rechts	Min N	-5.31	-2.46	3.37	-1.29	-5.65	-3.90	BC 15

4.12 DOORSNEDES - SNEDEKRACHTEN

Resultaatcombinaties

Staaf No.	RC	Knoop No.	Snede x [m]		Krachten [kN] N	V_y	V_z	Momenten [kNm] M_T	M_y	M_z	Bijbehorend Belastingsgeval
15	RC1			Max V_y	9.99	⊳ 7.31	-9.33	3.48	16.56	10.61	BC 10
				Min V_y	-5.31	⊳ -2.46	3.37	-1.29	-5.65	-3.90	BC 15
				Max V_z	-5.23	-2.23	⊳ 3.81	-0.56	-6.76	-3.00	BC 14
				Min V_z	10.16	7.10	⊳ -10.16	3.35	17.05	10.26	BC 9
				Max M_T	9.14	6.80	-8.10	⊳ 3.80	12.77	10.13	BC 12
				Min M_T	-1.03	-0.69	-3.96	⊳ -1.55	9.38	-1.37	BC 23
				Max M_y	9.94	7.18	-9.56	3.11	⊳ 17.12	10.13	BC 11
				Min M_y	-5.23	-2.23	3.81	-0.56	⊳ -6.76	-3.00	BC 14
				Max M_z	10.20	7.23	-9.93	3.72	16.49	⊳ 10.73	BC 8
				Min M_z	-5.31	-2.46	3.37	-1.29	-5.65	⊳ -3.90	BC 15
			0.583	Max N	⊳ 10.51	7.05	-9.17	3.73	10.88	6.57	BC 8
			Links	Min N	⊳ -5.22	-2.50	3.27	-1.29	-3.69	-2.46	BC 15
				Max V_y	10.29	⊳ 7.13	-8.65	3.48	11.29	6.39	BC 10
				Min V_y	-5.22	⊳ -2.50	3.27	-1.29	-3.69	-2.46	BC 15
				Max V_z	-5.15	-2.28	⊳ 3.72	-0.56	-4.54	-1.68	BC 14
				Min V_z	10.47	6.93	⊳ -9.40	3.36	11.30	6.16	BC 9
				Max M_T	9.44	6.63	-7.42	⊳ 3.79	8.21	6.21	BC 12
				Min M_T	-0.94	-0.72	-3.75	⊳ -1.55	7.13	-0.97	BC 23
				Max M_y	10.25	7.01	-8.88	3.11	⊳ 11.71	5.99	BC 11
				Min M_y	-5.15	-2.28	3.72	-0.56	⊳ -4.54	-1.68	BC 14
				Max M_z	10.51	7.05	-9.17	3.73	10.88	⊳ 6.57	BC 8
				Min M_z	-5.22	-2.50	3.27	-1.29	-3.69	⊳ -2.46	BC 15
			0.583	Max N	⊳ 10.51	7.05	-9.17	3.73	10.88	6.57	BC 8
			Rechts	Min N	⊳ -5.22	-2.50	3.27	-1.29	-3.69	-2.46	BC 15
				Max V_y	10.29	⊳ 7.13	-8.65	3.48	11.29	6.39	BC 10
				Min V_y	-5.22	⊳ -2.50	3.27	-1.29	-3.69	-2.46	BC 15
				Max V_z	-5.15	-2.28	⊳ 3.72	-0.56	-4.54	-1.68	BC 14
				Min V_z	10.47	6.93	⊳ -9.40	3.36	11.30	6.16	BC 9
				Max M_T	9.44	6.63	-7.42	⊳ 3.79	8.21	6.21	BC 12
				Min M_T	-0.94	-0.72	-3.75	⊳ -1.55	7.13	-0.97	BC 23
				Max M_y	10.25	7.01	-8.88	3.11	⊳ 11.71	5.99	BC 11
				Min M_y	-5.15	-2.28	3.72	-0.56	⊳ -4.54	-1.68	BC 14
				Max M_z	10.51	7.05	-9.17	3.73	10.88	⊳ 6.57	BC 8
				Min M_z	-5.22	-2.50	3.27	-1.29	-3.69	⊳ -2.46	BC 15
			0.679	Max N	⊳ 10.59	7.01	-8.96	3.73	10.00	5.89	BC 8
			Links	Min N	⊳ -5.20	-2.50	3.21	-1.29	-3.37	-2.21	BC 15
				Max V_y	10.37	⊳ 7.09	-8.47	3.48	10.46	5.71	BC 10
				Min V_y	-5.20	⊳ -2.50	3.21	-1.29	-3.37	-2.21	BC 15
				Max V_z	-5.13	-2.30	⊳ 3.66	-0.56	-4.18	-1.46	BC 14
				Min V_z	10.55	6.89	⊳ -9.19	3.36	10.41	5.50	BC 9
				Max M_T	9.52	6.58	-7.24	⊳ 3.79	7.50	5.58	BC 12
				Min M_T	-0.92	-0.72	-3.71	⊳ -1.54	6.77	-0.90	BC 23
				Max M_y	10.34	6.97	-8.69	3.11	⊳ 10.86	5.32	BC 11
				Min M_y	-5.13	-2.30	3.66	-0.56	⊳ -4.18	-1.46	BC 14
				Max M_z	10.59	7.01	-8.96	3.73	10.00	⊳ 5.89	BC 8
				Min M_z	-5.20	-2.50	3.21	-1.29	-3.37	⊳ -2.21	BC 15
			0.679	Max N	⊳ 10.59	7.01	-8.96	3.73	10.00	5.89	BC 8
			Rechts	Min N	⊳ -5.20	-2.50	3.21	-1.29	-3.37	-2.21	BC 15
				Max V_y	10.37	⊳ 7.09	-8.47	3.48	10.46	5.71	BC 10
				Min V_y	-5.20	⊳ -2.50	3.21	-1.29	-3.37	-2.21	BC 15
				Max V_z	-5.13	-2.30	⊳ 3.66	-0.56	-4.18	-1.46	BC 14
				Min V_z	10.55	6.89	⊳ -9.19	3.36	10.41	5.50	BC 9
				Max M_T	9.52	6.58	-7.24	⊳ 3.79	7.50	5.58	BC 12
				Min M_T	-0.92	-0.72	-3.71	⊳ -1.54	6.77	-0.90	BC 23
				Max M_y	10.34	6.97	-8.69	3.11	⊳ 10.86	5.32	BC 11
				Min M_y	-5.13	-2.30	3.66	-0.56	⊳ -4.18	-1.46	BC 14
				Max M_z	10.59	7.01	-8.96	3.73	10.00	⊳ 5.89	BC 8
				Min M_z	-5.20	-2.50	3.21	-1.29	-3.37	⊳ -2.21	BC 15
			2.552	Max N	⊳ 12.11	6.10	-5.12	3.38	-2.96	-6.65	BC 9
			Links	Min N	⊳ -4.86	-2.49	2.48	-0.55	1.57	3.02	BC 14
				Max V_y	11.89	⊳ 6.24	-4.88	3.49	-2.00	-6.76	BC 10
				Min V_y	-4.86	⊳ -2.61	2.02	-1.29	1.53	2.58	BC 15
				Max V_z	-4.86	-2.49	⊳ 2.48	-0.55	1.57	3.02	BC 14
				Min V_z	12.11	6.10	⊳ -5.12	3.38	-2.96	-6.65	BC 9
				Max M_T	11.04	5.73	-3.66	⊳ 3.79	-2.67	-5.94	BC 12
				Min M_T	-0.57	-0.82	-2.89	⊳ -1.52	0.59	0.55	BC 23
				Max M_y	0.37	0.96	-0.43	-0.15	⊳ 3.68	-1.45	BC 20
				Min M_y	12.11	6.10	-5.12	3.38	⊳ -2.96	-6.65	BC 9
				Max M_z	-4.86	-2.49	2.48	-0.55	1.57	⊳ 3.02	BC 14
				Min M_z	11.90	6.18	-5.11	3.13	-2.03	⊳ -6.98	BC 11
			2.552	Max N	⊳ 12.11	6.10	-5.12	3.38	-2.96	-6.65	BC 9
			Rechts	Min N	⊳ -4.86	-2.49	2.48	-0.55	1.57	3.02	BC 14
				Max V_y	11.89	⊳ 6.24	-4.88	3.49	-2.00	-6.76	BC 10
				Min V_y	-4.86	⊳ -2.61	2.02	-1.29	1.53	2.58	BC 15
				Max V_z	-4.86	-2.49	⊳ 2.48	-0.55	1.57	3.02	BC 14
				Min V_z	12.11	6.10	⊳ -5.12	3.38	-2.96	-6.65	BC 9
				Max M_T	11.04	5.73	-3.66	⊳ 3.79	-2.67	-5.94	BC 12
				Min M_T	-0.57	-0.82	-2.89	⊳ -1.52	0.59	0.55	BC 23
				Max M_y	0.37	0.96	-0.43	-0.15	⊳ 3.68	-1.45	BC 20
				Min M_y	12.11	6.10	-5.12	3.38	⊳ -2.96	-6.65	BC 9
				Max M_z	-4.86	-2.49	2.48	-0.55	1.57	⊳ 3.02	BC 14
				Min M_z	11.90	6.18	-5.11	3.13	-2.03	⊳ -6.98	BC 11
			2.581	Max N	⊳ 12.13	6.09	-5.06	3.38	-3.10	-6.82	BC 9
			Links	Min N	⊳ -4.86	-2.49	2.47	-0.55	1.64	3.09	BC 14

4.12 DOORSNEDES - SNEDEKRACHTEN

Resultaatcombinaties

Staaf No.	RC	Knoop No.	Snede x [m]		Krachten [kN] N	V_y	V_z	Momenten [kNm] M_T	M_y	M_z	Bijbehorend Belastingsgeval
15	RC1			Max V_y	11.92	▷ 6.23	-4.83	3.49	-2.14	-6.93	BC 10
				Min V_y	-4.85	▷ -2.61	2.00	-1.29	1.58	2.65	BC 15
				Max V_z	-4.86	-2.49	▷ 2.47	-0.55	1.64	3.09	BC 14
				Min V_z	11.92	6.16	▷ -5.06	3.13	-2.17	-7.15	BC 11
				Max M_T	11.06	5.72	-3.61	▷ 3.79	-2.77	-6.10	BC 12
				Min M_T	-0.57	-0.82	-2.88	▷ -1.52	0.51	0.57	BC 23
				Max M_y	0.37	0.95	-0.45	-0.15	▷ 3.67	-1.48	BC 20
				Min M_y	12.13	6.09	-5.06	3.38	▷ -3.10	-6.82	BC 9
				Max M_z	-4.86	-2.49	2.47	-0.55	1.64	▷ 3.09	BC 14
				Min M_z	11.92	6.16	-5.06	3.13	-2.17	▷ -7.15	BC 11
			2.581	Max N	▷ 12.13	6.09	-5.06	3.38	-3.10	-6.82	BC 9
			Rechts	Min N	▷ -4.86	-2.49	2.47	-0.55	1.64	3.09	BC 14
				Max V_y	11.92	▷ 6.23	-4.83	3.49	-2.14	-6.93	BC 10
				Min V_y	-4.85	▷ -2.61	2.00	-1.29	1.58	2.65	BC 15
				Max V_z	-4.86	-2.49	▷ 2.47	-0.55	1.64	3.09	BC 14
				Min V_z	11.92	6.16	▷ -5.06	3.13	-2.17	-7.15	BC 11
				Max M_T	11.06	5.72	-3.61	▷ 3.79	-2.77	-6.10	BC 12
				Min M_T	-0.57	-0.82	-2.88	▷ -1.52	0.51	0.57	BC 23
				Max M_y	0.37	0.95	-0.45	-0.15	▷ 3.67	-1.48	BC 20
				Min M_y	12.13	6.09	-5.06	3.38	▷ -3.10	-6.82	BC 9
				Max M_z	-4.86	-2.49	2.47	-0.55	1.64	▷ 3.09	BC 14
				Min M_z	11.92	6.16	-5.06	3.13	-2.17	▷ -7.15	BC 11
			3.260	Max N	▷ 12.44	5.94	-4.25	3.38	-6.19	-10.89	BC 9
			Links	Min N	▷ -4.77	-2.55	2.36	-0.55	3.24	4.80	BC 14
				Max V_y	12.22	▷ 6.08	-4.11	3.50	-5.11	-11.10	BC 10
				Min V_y	-4.75	▷ -2.65	1.90	-1.29	2.87	4.44	BC 15
				Max V_z	-4.77	-2.55	▷ 2.36	-0.55	3.24	4.80	BC 14
				Min V_z	12.22	6.02	▷ -4.34	3.13	-5.30	-11.28	BC 11
				Max M_T	11.36	5.56	-2.89	▷ 3.79	-4.91	-9.92	BC 12
				Min M_T	-0.46	-0.86	-2.63	▷ -1.51	-1.36	1.14	BC 23
				Max M_y	0.46	0.90	-0.55	-0.15	▷ 3.30	-2.11	BC 20
				Min M_y	12.44	5.94	-4.25	3.38	▷ -6.19	-10.89	BC 9
				Max M_z	-4.77	-2.55	2.36	-0.55	3.24	▷ 4.80	BC 14
				Min M_z	12.22	6.02	-4.34	3.13	-5.30	▷ -11.28	BC 11
		11	3.260	Max N	▷ 12.44	5.94	-4.25	3.38	-6.19	-10.89	BC 9
			Rechts	Min N	▷ -4.77	-2.55	2.36	-0.55	3.24	4.80	BC 14
				Max V_y	12.22	▷ 6.08	-4.11	3.50	-5.11	-11.10	BC 10
				Min V_y	-4.75	▷ -2.65	1.90	-1.29	2.87	4.44	BC 15
				Max V_z	-4.77	-2.55	▷ 2.36	-0.55	3.24	4.80	BC 14
				Min V_z	12.22	6.02	▷ -4.34	3.13	-5.30	-11.28	BC 11
				Max M_T	11.36	5.56	-2.89	▷ 3.79	-4.91	-9.92	BC 12
				Min M_T	-0.46	-0.86	-2.63	▷ -1.51	-1.36	1.14	BC 23
				Max M_y	0.46	0.90	-0.55	-0.15	▷ 3.30	-2.11	BC 20
				Min M_y	12.44	5.94	-4.25	3.38	▷ -6.19	-10.89	BC 9
				Max M_z	-4.77	-2.55	2.36	-0.55	3.24	▷ 4.80	BC 14
				Min M_z	12.22	6.02	-4.34	3.13	-5.30	▷ -11.28	BC 11
16	RC1	12	0.000	Max N	▷ 6.18	-0.86	-19.52	-3.74	39.14	-0.33	BC 2
			Links	Min N	▷ -11.11	3.98	7.07	2.01	-11.66	6.48	BC 21
				Max V_y	-11.11	▷ 3.98	7.07	2.01	-11.66	6.48	BC 21
				Min V_y	5.45	▷ -1.30	-18.40	-3.32	34.22	-0.44	BC 6
				Max V_z	-4.13	1.14	▷ 7.46	1.44	-14.01	0.63	BC 15
				Min V_z	4.21	-0.48	▷ -22.42	-4.03	44.48	0.94	BC 8
				Max M_T	-11.11	3.98	7.07	▷ 2.01	-11.66	6.48	BC 21
				Min M_T	4.21	-0.48	-22.42	▷ -4.03	44.48	0.94	BC 8
				Max M_y	4.21	-0.48	-22.42	-4.03	▷ 44.48	0.94	BC 8
				Min M_y	-4.13	1.14	7.46	1.44	▷ -14.01	0.63	BC 15
				Max M_z	-11.11	3.98	7.07	2.01	-11.66	▷ 6.48	BC 21
				Min M_z	-0.14	-0.11	6.94	0.89	-12.12	▷ -1.77	BC 14
			0.000	Max N	▷ 6.18	-0.86	-19.52	-3.74	39.14	-0.33	BC 2
			Rechts	Min N	▷ -11.11	3.98	7.07	2.01	-11.66	6.48	BC 21
				Max V_y	-11.11	▷ 3.98	7.07	2.01	-11.66	6.48	BC 21
				Min V_y	5.45	▷ -1.30	-18.40	-3.32	34.22	-0.44	BC 6
				Max V_z	-4.13	1.14	▷ 7.46	1.44	-14.01	0.63	BC 15
				Min V_z	4.21	-0.48	▷ -22.42	-4.03	44.48	0.94	BC 8
				Max M_T	-11.11	3.98	7.07	▷ 2.01	-11.66	6.48	BC 21
				Min M_T	4.21	-0.48	-22.42	▷ -4.03	44.48	0.94	BC 8
				Max M_y	4.21	-0.48	-22.42	-4.03	▷ 44.48	0.94	BC 8
				Min M_y	-4.13	1.14	7.46	1.44	▷ -14.01	0.63	BC 15
				Max M_z	-11.11	3.98	7.07	2.01	-11.66	▷ 6.48	BC 21
				Min M_z	-0.14	-0.11	6.94	0.89	-12.12	▷ -1.77	BC 14
			0.583	Max N	▷ 6.38	-1.06	-18.79	-3.74	27.93	0.23	BC 2
			Links	Min N	▷ -11.03	3.90	6.97	2.00	-7.54	4.19	BC 21
				Max V_y	-11.03	▷ 3.90	6.97	2.00	-7.54	4.19	BC 21
				Min V_y	5.63	▷ -1.51	-17.68	-3.34	23.67	0.38	BC 6
				Max V_z	-4.05	1.06	▷ 7.36	1.43	-9.66	-0.02	BC 15
				Min V_z	4.46	-0.75	▷ -21.62	-4.03	31.59	1.29	BC 8
				Max M_T	-11.03	3.90	6.97	▷ 2.00	-7.54	4.19	BC 21
				Min M_T	4.46	-0.75	-21.62	▷ -4.03	31.59	1.29	BC 8
				Max M_y	4.46	-0.75	-21.62	-4.03	▷ 31.59	1.29	BC 8
				Min M_y	-4.05	1.06	7.36	1.43	▷ -9.66	-0.02	BC 15
				Max M_z	-11.03	3.90	6.97	2.00	-7.54	▷ 4.19	BC 21
				Min M_z	1.57	0.71	4.58	0.11	0.51	▷ -2.03	BC 22
			0.583	Max N	▷ 6.38	-1.06	-18.79	-3.74	27.93	0.23	BC 2
			Rechts	Min N	▷ -11.03	3.90	6.97	2.00	-7.54	4.19	BC 21

4.12 DOORSNEDES - SNEDEKRACHTEN

Resultaatcombinaties

Staaf No.	RC	Knoop No.	Snede x [m]		Krachten [kN] N	V_y	V_z	Momenten [kNm] M_T	M_y	M_z	Bijbehorend Belastingsgeval
16	RC1			Max V_y	-11.03	▷ 3.90	6.97	2.00	-7.54	4.19	BC 21
				Min V_y	5.63	▷ -1.51	-17.68	-3.34	23.67	0.38	BC 6
				Max V_z	-4.05	1.06	▷ 7.36	1.43	-9.66	-0.02	BC 15
				Min V_z	4.46	-0.75	▷ -21.62	-4.03	31.59	1.29	BC 8
				Max M_T	-11.03	3.90	6.97	▷ 2.00	-7.54	4.19	BC 21
				Min M_T	4.46	-0.75	-21.62	▷ -4.03	31.59	1.29	BC 8
				Max M_y	4.46	-0.75	-21.62	-4.03	▷ 31.59	1.29	BC 8
				Min M_y	-4.05	1.06	7.36	1.43	▷ -9.66	-0.02	BC 15
				Max M_z	-11.03	3.90	6.97	2.00	-7.54	▷ 4.19	BC 21
				Min M_z	1.57	0.71	4.58	0.11	0.51	▷ -2.03	BC 22
			0.645	Max N	▷ 6.41	-1.10	-18.66	-3.74	26.76	0.30	BC 2
			Links	Min N	▷ -11.02	3.89	6.93	2.00	-7.11	3.94	BC 21
				Max V_y	-11.02	▷ 3.89	6.93	2.00	-7.11	3.94	BC 21
				Min V_y	5.66	▷ -1.54	-17.55	-3.34	22.57	0.47	BC 6
				Max V_z	-4.04	1.05	▷ 7.32	1.43	-9.21	-0.08	BC 15
				Min V_z	4.50	-0.80	▷ -21.47	-4.03	30.25	1.34	BC 8
				Max M_T	-11.02	3.89	6.93	▷ 2.00	-7.11	3.94	BC 21
				Min M_T	4.50	-0.80	-21.47	▷ -4.03	30.25	1.34	BC 8
				Max M_y	4.50	-0.80	-21.47	-4.03	▷ 30.25	1.34	BC 8
				Min M_y	-4.04	1.05	7.32	1.43	▷ -9.21	-0.08	BC 15
				Max M_z	-11.02	3.89	6.93	2.00	-7.11	▷ 3.94	BC 21
				Min M_z	1.58	0.70	4.54	0.10	0.79	▷ -2.08	BC 22
			0.645	Max N	▷ 6.41	-1.10	-18.66	-3.74	26.76	0.30	BC 2
			Rechts	Min N	▷ -11.02	3.89	6.93	2.00	-7.11	3.94	BC 21
				Max V_y	-11.02	▷ 3.89	6.93	2.00	-7.11	3.94	BC 21
				Min V_y	5.66	▷ -1.54	-17.55	-3.34	22.57	0.47	BC 6
				Max V_z	-4.04	1.05	▷ 7.32	1.43	-9.21	-0.08	BC 15
				Min V_z	4.50	-0.80	▷ -21.47	-4.03	30.25	1.34	BC 8
				Max M_T	-11.02	3.89	6.93	▷ 2.00	-7.11	3.94	BC 21
				Min M_T	4.50	-0.80	-21.47	▷ -4.03	30.25	1.34	BC 8
				Max M_y	4.50	-0.80	-21.47	-4.03	▷ 30.25	1.34	BC 8
				Min M_y	-4.04	1.05	7.32	1.43	▷ -9.21	-0.08	BC 15
				Max M_z	-11.02	3.89	6.93	2.00	-7.11	▷ 3.94	BC 21
				Min M_z	1.58	0.70	4.54	0.10	0.79	▷ -2.08	BC 22
			1.290	Max N	▷ 6.61	-1.33	-17.87	-3.75	15.04	1.11	BC 2
			Links	Min N	▷ -10.94	3.81	6.84	1.99	-2.70	1.46	BC 21
				Max V_y	-10.94	▷ 3.81	6.84	1.99	-2.70	1.46	BC 21
				Min V_y	5.85	▷ -1.78	-16.75	-3.36	11.57	1.57	BC 6
				Max V_z	-3.96	0.96	▷ 7.23	1.43	-4.54	-0.73	BC 15
				Min V_z	4.76	-1.12	▷ -20.56	-4.04	16.77	2.00	BC 8
				Max M_T	-10.94	3.81	6.84	▷ 1.99	-2.70	1.46	BC 21
				Min M_T	4.76	-1.12	-20.56	▷ -4.04	16.77	2.00	BC 8
				Max M_y	4.76	-1.12	-20.56	-4.04	▷ 16.77	2.00	BC 8
				Min M_y	-3.96	0.96	7.23	1.43	▷ -4.54	-0.73	BC 15
				Max M_z	0.10	0.31	-17.90	-3.15	14.83	▷ 2.71	BC 11
				Min M_z	1.64	0.62	4.46	0.09	3.67	▷ -2.50	BC 22
		31	1.290	Max N	▷ 6.61	-1.33	-17.87	-3.75	15.04	1.11	BC 2
			Rechts	Min N	▷ -10.94	3.81	6.84	1.99	-2.70	1.46	BC 21
				Max V_y	-10.94	▷ 3.81	6.84	1.99	-2.70	1.46	BC 21
				Min V_y	5.85	▷ -1.78	-16.75	-3.36	11.57	1.57	BC 6
				Max V_z	-3.96	0.96	▷ 7.23	1.43	-4.54	-0.73	BC 15
				Min V_z	4.76	-1.12	▷ -20.56	-4.04	16.77	2.00	BC 8
				Max M_T	-10.94	3.81	6.84	▷ 1.99	-2.70	1.46	BC 21
				Min M_T	4.76	-1.12	-20.56	▷ -4.04	16.77	2.00	BC 8
				Max M_y	4.76	-1.12	-20.56	-4.04	▷ 16.77	2.00	BC 8
				Min M_y	-3.96	0.96	7.23	1.43	▷ -4.54	-0.73	BC 15
				Max M_z	0.10	0.31	-17.90	-3.15	14.83	▷ 2.71	BC 11
				Min M_z	1.64	0.62	4.46	0.09	3.67	▷ -2.50	BC 22
17	RC1	4	0.000	Max N	▷ 10.76	8.38	9.96	-3.91	-16.61	11.51	BC 9
			Links	Min N	▷ -5.23	-2.23	-3.81	0.56	6.76	-3.00	BC 14
				Max V_y	10.55	▷ 8.46	9.36	-3.67	-16.69	11.39	BC 11
				Min V_y	-5.23	▷ -2.23	-3.81	0.56	6.76	-3.00	BC 14
				Max V_z	10.31	8.02	▷ 10.47	-3.49	-18.05	10.92	BC 13
				Min V_z	-3.40	-0.96	▷ -5.80	-1.04	12.50	-0.88	BC 22
				Max M_T	-5.23	-2.23	-3.81	▷ 0.56	6.76	-3.00	BC 14
				Min M_T	10.76	8.38	9.96	▷ -3.91	-16.61	11.51	BC 9
				Max M_y	-3.40	-0.96	-5.80	-1.04	▷ 12.50	-0.88	BC 22
				Min M_y	10.31	8.02	10.47	-3.49	▷ -18.05	10.92	BC 13
				Max M_z	10.76	8.38	9.96	-3.91	-16.61	▷ 11.51	BC 9
				Min M_z	-5.23	-2.23	-3.81	0.56	6.76	▷ -3.00	BC 14
			0.000	Max N	▷ 10.76	8.38	9.96	-3.91	-16.61	11.51	BC 9
			Rechts	Min N	▷ -5.23	-2.23	-3.81	0.56	6.76	-3.00	BC 14
				Max V_y	10.55	▷ 8.46	9.36	-3.67	-16.69	11.39	BC 11
				Min V_y	-5.23	▷ -2.23	-3.81	0.56	6.76	-3.00	BC 14
				Max V_z	10.31	8.02	▷ 10.47	-3.49	-18.05	10.92	BC 13
				Min V_z	-3.40	-0.96	▷ -5.80	-1.04	12.50	-0.88	BC 22
				Max M_T	-5.23	-2.23	-3.81	▷ 0.56	6.76	-3.00	BC 14
				Min M_T	10.76	8.38	9.96	▷ -3.91	-16.61	11.51	BC 9
				Max M_y	-3.40	-0.96	-5.80	-1.04	▷ 12.50	-0.88	BC 22
				Min M_y	10.31	8.02	10.47	-3.49	▷ -18.05	10.92	BC 13
				Max M_z	10.76	8.38	9.96	-3.91	-16.61	▷ 11.51	BC 9
				Min M_z	-5.23	-2.23	-3.81	0.56	6.76	▷ -3.00	BC 14
			0.583	Max N	▷ 11.08	7.99	9.21	-3.91	-10.98	6.74	BC 9
			Links	Min N	▷ -5.15	-2.28	-3.72	0.56	4.54	-1.68	BC 14

4.12 DOORSNEDES - SNEDEKRACHTEN

Resultaatcombinaties

Staaf No.	RC	Knoop No.	Snede x [m]		Krachten [kN] N	V_y	V_z	Momenten [kNm] M_T	M_y	M_z	Bijbehorend Belastingsgeval
17	RC1			Max V_y	10.86	▷ 8.07	8.69	-3.67	-11.39	6.57	BC 11
				Min V_y	-5.15	▷ -2.28	-3.72	0.56	4.54	-1.68	BC 14
				Max V_z	10.62	7.64	▷ 9.71	-3.49	-12.12	6.35	BC 13
				Min V_z	-3.32	-1.00	▷ -5.70	-1.05	9.12	-0.31	BC 22
				Max M_T	-5.15	-2.28	-3.72	▷ 0.56	4.54	-1.68	BC 14
				Min M_T	11.08	7.99	9.21	▷ -3.91	-10.98	6.74	BC 9
				Max M_y	-3.32	-1.00	-5.70	-1.05	▷ 9.12	-0.31	BC 22
				Min M_y	9.16	6.95	9.09	-2.80	▷ -12.12	5.36	BC 7
				Max M_z	11.08	7.99	9.21	-3.91	-10.98	▷ 6.74	BC 9
				Min M_z	-5.15	-2.28	-3.72	0.56	4.54	▷ -1.68	BC 14
			0.583	Max N	▷ 11.08	7.99	9.21	-3.91	-10.98	6.74	BC 9
			Rechts	Min N	▷ -5.15	-2.28	-3.72	0.56	4.54	-1.68	BC 14
				Max V_y	10.86	▷ 8.07	8.69	-3.67	-11.39	6.57	BC 11
				Min V_y	-5.15	▷ -2.28	-3.72	0.56	4.54	-1.68	BC 14
				Max V_z	10.62	7.64	▷ 9.71	-3.49	-12.12	6.35	BC 13
				Min V_z	-3.32	-1.00	▷ -5.70	-1.05	9.12	-0.31	BC 22
				Max M_T	-5.15	-2.28	-3.72	▷ 0.56	4.54	-1.68	BC 14
				Min M_T	11.08	7.99	9.21	▷ -3.91	-10.98	6.74	BC 9
				Max M_y	-3.32	-1.00	-5.70	-1.05	▷ 9.12	-0.31	BC 22
				Min M_y	9.16	6.95	9.09	-2.80	▷ -12.12	5.36	BC 7
				Max M_z	11.08	7.99	9.21	-3.91	-10.98	▷ 6.74	BC 9
				Min M_z	-5.15	-2.28	-3.72	0.56	4.54	▷ -1.68	BC 14
			0.679	Max N	▷ 11.16	7.91	9.00	-3.91	-10.10	5.98	BC 9
			Links	Min N	▷ -5.13	-2.30	-3.66	0.56	4.18	-1.46	BC 14
				Max V_y	10.94	▷ 7.99	8.50	-3.67	-10.56	5.80	BC 11
				Min V_y	-5.13	▷ -2.30	-3.66	0.56	4.18	-1.46	BC 14
				Max V_z	10.70	7.56	▷ 9.51	-3.50	-11.19	5.62	BC 13
				Min V_z	-3.30	-1.01	▷ -5.64	-1.05	8.57	-0.22	BC 22
				Max M_T	-5.13	-2.30	-3.66	▷ 0.56	4.18	-1.46	BC 14
				Min M_T	11.16	7.91	9.00	▷ -3.91	-10.10	5.98	BC 9
				Max M_y	-3.30	-1.01	-5.64	-1.05	▷ 8.57	-0.22	BC 22
				Min M_y	9.22	6.84	8.90	-2.80	▷ -11.26	4.70	BC 7
				Max M_z	11.16	7.91	9.00	-3.91	-10.10	▷ 5.98	BC 9
				Min M_z	-5.13	-2.30	-3.66	0.56	4.18	▷ -1.46	BC 14
			0.679	Max N	▷ 11.16	7.91	9.00	-3.91	-10.10	5.98	BC 9
			Rechts	Min N	▷ -5.13	-2.30	-3.66	0.56	4.18	-1.46	BC 14
				Max V_y	10.94	▷ 7.99	8.50	-3.67	-10.56	5.80	BC 11
				Min V_y	-5.13	▷ -2.30	-3.66	0.56	4.18	-1.46	BC 14
				Max V_z	10.70	7.56	▷ 9.51	-3.50	-11.19	5.62	BC 13
				Min V_z	-3.30	-1.01	▷ -5.64	-1.05	8.57	-0.22	BC 22
				Max M_T	-5.13	-2.30	-3.66	▷ 0.56	4.18	-1.46	BC 14
				Min M_T	11.16	7.91	9.00	▷ -3.91	-10.10	5.98	BC 9
				Max M_y	-3.30	-1.01	-5.64	-1.05	▷ 8.57	-0.22	BC 22
				Min M_y	9.22	6.84	8.90	-2.80	▷ -11.26	4.70	BC 7
				Max M_z	11.16	7.91	9.00	-3.91	-10.10	▷ 5.98	BC 9
				Min M_z	-5.13	-2.30	-3.66	0.56	4.18	▷ -1.46	BC 14
			2.552	Max N	▷ 12.72	6.36	4.95	-3.92	2.93	-7.36	BC 9
			Links	Min N	▷ -4.86	-2.49	-2.48	0.55	-1.57	3.02	BC 14
				Max V_y	12.50	▷ 6.44	4.95	-3.67	2.01	-7.69	BC 11
				Min V_y	-4.86	▷ -2.49	-2.48	0.55	-1.57	3.02	BC 14
				Max V_z	12.26	6.02	▷ 5.45	-3.52	2.78	-7.07	BC 13
				Min V_z	-3.03	-1.20	▷ -4.47	-1.09	-0.90	1.85	BC 22
				Max M_T	-4.86	-2.49	-2.48	▷ 0.55	-1.57	3.02	BC 14
				Min M_T	12.72	6.36	4.95	▷ -3.92	2.93	-7.36	BC 9
				Max M_y	12.72	6.36	4.95	-3.92	▷ 2.93	-7.36	BC 9
				Min M_y	0.37	0.96	0.43	0.15	▷ -3.68	-1.45	BC 20
				Max M_z	-4.86	-2.49	-2.48	0.55	-1.57	▷ 3.02	BC 14
				Min M_z	12.50	6.44	4.95	-3.67	2.01	▷ -7.69	BC 11
			2.552	Max N	▷ 12.72	6.36	4.95	-3.92	2.93	-7.36	BC 9
			Rechts	Min N	▷ -4.86	-2.49	-2.48	0.55	-1.57	3.02	BC 14
				Max V_y	12.50	▷ 6.44	4.95	-3.67	2.01	-7.69	BC 11
				Min V_y	-4.86	▷ -2.49	-2.48	0.55	-1.57	3.02	BC 14
				Max V_z	12.26	6.02	▷ 5.45	-3.52	2.78	-7.07	BC 13
				Min V_z	-3.03	-1.20	▷ -4.47	-1.09	-0.90	1.85	BC 22
				Max M_T	-4.86	-2.49	-2.48	▷ 0.55	-1.57	3.02	BC 14
				Min M_T	12.72	6.36	4.95	▷ -3.92	2.93	-7.36	BC 9
				Max M_y	12.72	6.36	4.95	-3.92	▷ 2.93	-7.36	BC 9
				Min M_y	0.37	0.96	0.43	0.15	▷ -3.68	-1.45	BC 20
				Max M_z	-4.86	-2.49	-2.48	0.55	-1.57	▷ 3.02	BC 14
				Min M_z	12.50	6.44	4.95	-3.67	2.01	▷ -7.69	BC 11
			2.581	Max N	▷ 12.74	6.34	4.89	-3.92	3.07	-7.54	BC 9
			Links	Min N	▷ -4.86	-2.49	-2.47	0.55	-1.64	3.09	BC 14
				Max V_y	12.52	▷ 6.42	4.90	-3.67	2.14	-7.87	BC 11
				Min V_y	-4.86	▷ -2.49	-2.47	0.55	-1.64	3.09	BC 14
				Max V_z	12.28	6.00	▷ 5.39	-3.52	2.93	-7.24	BC 13
				Min V_z	-3.03	-1.20	▷ -4.45	-1.09	-1.03	1.89	BC 22
				Max M_T	-4.86	-2.49	-2.47	▷ 0.55	-1.64	3.09	BC 14
				Min M_T	12.74	6.34	4.89	▷ -3.92	3.07	-7.54	BC 9
				Max M_y	12.74	6.34	4.89	-3.92	▷ 3.07	-7.54	BC 9
				Min M_y	0.37	0.95	0.45	0.15	▷ -3.67	-1.48	BC 20
				Max M_z	-4.86	-2.49	-2.47	0.55	-1.64	▷ 3.09	BC 14
				Min M_z	12.52	6.42	4.90	-3.67	2.14	▷ -7.87	BC 11
			2.581	Max N	▷ 12.74	6.34	4.89	-3.92	3.07	-7.54	BC 9
			Rechts	Min N	▷ -4.86	-2.49	-2.47	0.55	-1.64	3.09	BC 14

4.12 DOORSNEDES - SNEDEKRACHTEN

Resultaatcombinaties

Staaf No.	RC	Knoop No.	Snede x [m]		Krachten [kN] N	V_y	V_z	Momenten [kNm] M_T	M_y	M_z	Bijbehorend Belastingsgeval
17	RC1			Max V_y	12.52	▷ 6.42	4.90	-3.67	2.14	-7.88	BC 11
				Min V_y	-4.86	▷ -2.49	-2.47	0.55	-1.64	3.09	BC 14
				Max V_z	12.28	6.00	▷ 5.39	-3.52	2.93	-7.24	BC 13
				Min V_z	-3.03	-1.20	▷ -4.45	-1.09	-1.03	1.89	BC 22
				Max M_T	-4.86	-2.49	-2.47	▷ 0.55	-1.64	3.09	BC 14
				Min M_T	12.74	6.34	4.89	▷ -3.92	3.07	-7.54	BC 9
				Max M_y	12.74	6.34	4.89	-3.92	▷ 3.07	-7.54	BC 9
				Min M_y	0.37	0.95	0.45	0.15	▷ -3.67	-1.48	BC 20
				Max M_z	-4.86	-2.49	-2.47	0.55	-1.64	▷ 3.09	BC 14
				Min M_z	12.52	6.42	4.90	-3.67	2.14	▷ -7.88	BC 11
			3.260	Max N	▷ 13.04	5.94	4.09	-3.92	6.05	-11.70	BC 9
			Links	Min N	▷ -4.77	-2.55	-2.36	0.55	-3.24	4.80	BC 14
				Max V_y	12.22	▷ 6.08	4.11	-3.50	5.11	-11.10	BC 10
				Min V_y	-3.56	▷ -2.70	-2.22	0.20	-3.13	2.88	BC 15
				Max V_z	12.59	5.60	▷ 4.59	-3.53	6.25	-11.16	BC 13
				Min V_z	-2.94	-1.25	▷ -4.35	-1.10	-3.98	2.73	BC 22
				Max M_T	-4.77	-2.55	-2.36	▷ 0.55	-3.24	4.80	BC 14
				Min M_T	13.04	5.94	4.09	▷ -3.92	6.05	-11.70	BC 9
				Max M_y	12.59	5.60	4.59	-3.53	▷ 6.25	-11.16	BC 13
				Min M_y	-2.94	-1.25	-4.35	-1.10	▷ -3.98	2.73	BC 22
				Max M_z	-4.77	-2.55	-2.36	0.55	-3.24	▷ 4.80	BC 14
				Min M_z	12.83	6.02	4.18	-3.67	5.16	▷ -12.09	BC 11
		13	3.260	Max N	▷ 13.04	5.94	4.09	-3.92	6.05	-11.70	BC 9
			Rechts	Min N	▷ -4.77	-2.55	-2.36	0.55	-3.24	4.80	BC 14
				Max V_y	12.22	▷ 6.08	4.11	-3.50	5.11	-11.10	BC 10
				Min V_y	-3.56	▷ -2.70	-2.22	0.20	-3.13	2.88	BC 15
				Max V_z	12.59	5.60	▷ 4.59	-3.53	6.25	-11.16	BC 13
				Min V_z	-2.94	-1.25	▷ -4.35	-1.10	-3.98	2.73	BC 22
				Max M_T	-4.77	-2.55	-2.36	▷ 0.55	-3.24	4.80	BC 14
				Min M_T	13.04	5.94	4.09	▷ -3.92	6.05	-11.70	BC 9
				Max M_y	12.59	5.60	4.59	-3.53	▷ 6.25	-11.16	BC 13
				Min M_y	-2.94	-1.25	-4.35	-1.10	▷ -3.98	2.73	BC 22
				Max M_z	-4.77	-2.55	-2.36	0.55	-3.24	▷ 4.80	BC 14
				Min M_z	12.83	6.02	4.18	-3.67	5.16	▷ -12.09	BC 11
39	RC1	39	0.000	Max N	▷ 7.13	-2.30	-2.77	-0.88	4.31	-4.82	BC 21
			Links	Min N	▷ -5.89	2.74	7.98	2.11	-15.19	3.26	BC 14
				Max V_y	-1.26	▷ 3.11	-5.44	-0.35	13.68	4.36	BC 18
				Min V_y	7.13	▷ -2.30	-2.77	-0.88	4.31	-4.82	BC 21
				Max V_z	-5.89	2.74	▷ 7.98	2.11	-15.19	3.26	BC 14
				Min V_z	2.54	0.07	▷ -22.09	-3.67	43.55	2.15	BC 9
				Max M_T	-5.89	2.74	7.98	▷ 2.11	-15.19	3.26	BC 14
				Min M_T	4.30	-0.64	-22.01	▷ -3.81	42.98	0.69	BC 11
				Max M_y	2.54	0.07	-22.09	-3.67	▷ 43.55	2.15	BC 9
				Min M_y	-5.89	2.74	7.98	2.11	▷ -15.19	3.26	BC 14
				Max M_z	0.44	2.02	-18.43	-2.51	36.04	▷ 4.77	BC 2
				Min M_z	7.13	-2.30	-2.77	-0.88	4.31	▷ -4.82	BC 21
			0.000	Max N	▷ 7.13	-2.30	-2.77	-0.88	4.31	-4.82	BC 21
			Rechts	Min N	▷ -5.89	2.74	7.98	2.11	-15.19	3.26	BC 14
				Max V_y	-1.26	▷ 3.11	-5.44	-0.35	13.68	4.36	BC 18
				Min V_y	7.13	▷ -2.30	-2.77	-0.88	4.31	-4.82	BC 21
				Max V_z	-5.89	2.74	▷ 7.98	2.11	-15.19	3.26	BC 14
				Min V_z	2.54	0.07	▷ -22.09	-3.67	43.55	2.15	BC 9
				Max M_T	-5.89	2.74	7.98	▷ 2.11	-15.19	3.26	BC 14
				Min M_T	4.30	-0.64	-22.01	▷ -3.81	42.98	0.69	BC 11
				Max M_y	2.54	0.07	-22.09	-3.67	▷ 43.55	2.15	BC 9
				Min M_y	-5.89	2.74	7.98	2.11	▷ -15.19	3.26	BC 14
				Max M_z	0.44	2.02	-18.43	-2.51	36.03	▷ 4.77	BC 2
				Min M_z	7.13	-2.30	-2.77	-0.88	4.31	▷ -4.82	BC 21
			0.583	Max N	▷ 7.17	-2.39	-2.55	-0.88	2.76	-3.45	BC 21
			Links	Min N	▷ -5.83	2.24	7.87	2.11	-10.55	1.81	BC 14
				Max V_y	-1.17	▷ 2.56	-5.14	-0.36	10.59	2.71	BC 18
				Min V_y	7.17	▷ -2.39	-2.55	-0.88	2.76	-3.45	BC 21
				Max V_z	-5.83	2.24	▷ 7.87	2.11	-10.55	1.81	BC 14
				Min V_z	2.78	-0.21	▷ -21.30	-3.68	30.85	2.18	BC 9
				Max M_T	-5.83	2.24	7.87	▷ 2.11	-10.55	1.81	BC 14
				Min M_T	4.54	-0.92	-21.21	▷ -3.82	30.33	1.13	BC 11
				Max M_y	2.78	-0.21	-21.30	-3.68	▷ 30.85	2.18	BC 9
				Min M_y	-5.83	2.24	7.87	2.11	▷ -10.55	1.81	BC 14
				Max M_z	0.63	1.38	-17.74	-2.52	25.45	▷ 3.77	BC 2
				Min M_z	7.17	-2.39	-2.55	-0.88	2.76	▷ -3.45	BC 21
			0.583	Max N	▷ 7.17	-2.39	-2.55	-0.88	2.76	-3.45	BC 21
			Rechts	Min N	▷ -5.83	2.24	7.87	2.11	-10.55	1.81	BC 14
				Max V_y	-1.17	▷ 2.56	-5.14	-0.36	10.59	2.71	BC 18
				Min V_y	7.17	▷ -2.39	-2.55	-0.88	2.76	-3.45	BC 21
				Max V_z	-5.83	2.24	▷ 7.87	2.11	-10.55	1.81	BC 14
				Min V_z	2.78	-0.21	▷ -21.30	-3.68	30.85	2.18	BC 9
				Max M_T	-5.83	2.24	7.87	▷ 2.11	-10.55	1.81	BC 14
				Min M_T	4.54	-0.92	-21.21	▷ -3.82	30.33	1.13	BC 11
				Max M_y	2.78	-0.21	-21.30	-3.68	▷ 30.85	2.18	BC 9
				Min M_y	-5.83	2.24	7.87	2.11	▷ -10.55	1.81	BC 14
				Max M_z	0.63	1.38	-17.74	-2.52	25.45	▷ 3.77	BC 2
				Min M_z	7.17	-2.39	-2.55	-0.88	2.76	▷ -3.45	BC 21
			0.645	Max N	▷ 7.18	-2.40	-2.53	-0.88	2.60	-3.31	BC 21
			Links	Min N	▷ -5.82	2.18	7.84	2.11	-10.06	1.67	BC 14

4.12 DOORSNEDES - SNEDEKRACHTEN

Resultaatcombinaties

Staaf No.	RC	Knoop No.	Snede x [m]		Krachten [kN] N	V_y	V_z	Momenten [kNm] M_T	M_y	M_z	Bijbehorend Belastingsgeval
39	RC1			Max V_y	-1.16	▷ 2.50	-5.10	-0.36	10.27	2.55	BC 18
				Min V_y	7.18	▷ -2.40	-2.53	-0.88	2.60	-3.31	BC 21
				Max V_z	-5.82	2.18	▷ 7.84	2.11	-10.06	1.67	BC 14
				Min V_z	2.82	-0.27	▷ -21.15	-3.68	29.53	2.19	BC 9
				Max M_T	-5.82	2.18	7.84	▷ 2.11	-10.06	1.67	BC 14
				Min M_T	4.58	-0.97	-21.06	▷ -3.82	29.01	1.19	BC 11
				Max M_y	2.82	-0.27	-21.15	-3.68	▷ 29.53	2.19	BC 9
				Min M_y	-5.82	2.18	7.84	2.11	▷ -10.06	1.67	BC 14
				Max M_z	0.66	1.29	-17.61	-2.52	24.35	▷ 3.68	BC 2
				Min M_z	7.18	-2.40	-2.53	-0.88	2.60	▷ -3.31	BC 21
			0.645	Max N	▷ 7.18	-2.40	-2.53	-0.88	2.60	-3.31	BC 21
			Rechts	Min N	▷ -5.82	2.18	7.84	2.11	-10.06	1.67	BC 14
				Max V_y	-1.16	▷ 2.50	-5.10	-0.36	10.27	2.55	BC 18
				Min V_y	7.18	▷ -2.40	-2.53	-0.88	2.60	-3.31	BC 21
				Max V_z	-5.82	2.18	▷ 7.84	2.11	-10.06	1.67	BC 14
				Min V_z	2.82	-0.27	▷ -21.15	-3.68	29.53	2.19	BC 9
				Max M_T	-5.82	2.18	7.84	▷ 2.11	-10.06	1.67	BC 14
				Min M_T	4.58	-0.97	-21.06	▷ -3.82	29.01	1.19	BC 11
				Max M_y	2.82	-0.27	-21.15	-3.68	▷ 29.53	2.19	BC 9
				Min M_y	-5.82	2.18	7.84	2.11	▷ -10.06	1.67	BC 14
				Max M_z	0.66	1.29	-17.61	-2.52	24.35	▷ 3.68	BC 2
				Min M_z	7.18	-2.40	-2.53	-0.88	2.60	▷ -3.31	BC 21
			1.290	Max N	▷ 7.23	-2.49	-2.30	-0.88	1.05	-1.73	BC 21
			Links	Min N	▷ -5.75	1.63	7.74	2.10	-5.06	0.45	BC 14
				Max V_y	-1.06	▷ 1.89	-4.77	-0.36	7.10	1.14	BC 18
				Min V_y	7.23	▷ -2.49	-2.30	-0.88	1.05	-1.73	BC 21
				Max V_z	-5.75	1.63	▷ 7.74	2.10	-5.06	0.45	BC 14
				Min V_z	3.07	-0.59	▷ -20.25	-3.69	16.26	2.52	BC 9
				Max M_T	-5.75	1.63	7.74	▷ 2.10	-5.06	0.45	BC 14
				Min M_T	4.83	-1.30	-20.16	▷ -3.83	15.80	1.97	BC 11
				Max M_y	3.07	-0.59	-20.25	-3.69	▷ 16.26	2.52	BC 9
				Min M_y	-5.75	1.63	7.74	2.10	▷ -5.06	0.45	BC 14
				Max M_z	0.85	0.57	-16.83	-2.52	13.30	▷ 3.11	BC 2
				Min M_z	7.23	-2.49	-2.30	-0.88	1.05	▷ -1.73	BC 21
		56	1.290	Max N	▷ 7.23	-2.49	-2.30	-0.88	1.05	-1.73	BC 21
			Rechts	Min N	▷ -5.75	1.63	7.74	2.10	-5.06	0.45	BC 14
				Max V_y	-1.06	▷ 1.89	-4.77	-0.36	7.10	1.14	BC 18
				Min V_y	7.23	▷ -2.49	-2.30	-0.88	1.05	-1.73	BC 21
				Max V_z	-5.75	1.63	▷ 7.74	2.10	-5.06	0.45	BC 14
				Min V_z	3.07	-0.59	▷ -20.25	-3.69	16.26	2.52	BC 9
				Max M_T	-5.75	1.63	7.74	▷ 2.10	-5.06	0.45	BC 14
				Min M_T	4.83	-1.30	-20.16	▷ -3.83	15.80	1.97	BC 11
				Max M_y	3.07	-0.59	-20.25	-3.69	▷ 16.26	2.52	BC 9
				Min M_y	-5.75	1.63	7.74	2.10	▷ -5.06	0.45	BC 14
				Max M_z	0.85	0.57	-16.83	-2.52	13.30	▷ 3.11	BC 2
				Min M_z	7.23	-2.49	-2.30	-0.88	1.05	▷ -1.73	BC 21
40	RC1	35	0.000	Max N	▷ 10.72	7.73	10.13	-3.50	-16.96	10.91	BC 8
			Links	Min N	▷ -5.31	-2.46	-3.37	1.29	5.64	-3.90	BC 15
				Max V_y	10.72	▷ 7.73	10.13	-3.50	-16.96	10.91	BC 8
				Min V_y	-4.44	▷ -2.77	-0.95	0.27	5.90	-3.38	BC 21
				Max V_z	10.15	7.10	▷ 10.16	-3.35	-17.04	10.25	BC 9
				Min V_z	-4.21	-1.23	▷ -3.42	1.00	5.81	-2.64	BC 14
				Max M_T	-1.03	-0.68	3.96	▷ 1.55	-9.38	-1.37	BC 23
				Min M_T	9.65	7.31	8.30	▷ -3.57	-13.24	10.31	BC 12
				Max M_y	-3.34	-1.54	-1.00	-0.00	▷ 6.07	-2.13	BC 20
				Min M_y	10.15	7.10	10.16	-3.35	▷ -17.04	10.25	BC 9
				Max M_z	10.72	7.73	10.13	-3.50	-16.96	▷ 10.91	BC 8
				Min M_z	-5.31	-2.46	-3.37	1.29	5.64	▷ -3.90	BC 15
			0.000	Max N	▷ 10.72	7.73	10.13	-3.50	-16.96	10.91	BC 8
			Rechts	Min N	▷ -5.31	-2.46	-3.37	1.29	5.64	-3.90	BC 15
				Max V_y	10.72	▷ 7.73	10.13	-3.50	-16.96	10.91	BC 8
				Min V_y	-4.44	▷ -2.77	-0.95	0.27	5.90	-3.38	BC 21
				Max V_z	10.15	7.10	▷ 10.16	-3.35	-17.04	10.25	BC 9
				Min V_z	-4.21	-1.23	▷ -3.42	1.00	5.81	-2.64	BC 14
				Max M_T	-1.03	-0.68	3.96	▷ 1.55	-9.38	-1.37	BC 23
				Min M_T	9.65	7.31	8.30	▷ -3.57	-13.24	10.31	BC 12
				Max M_y	-3.34	-1.54	-1.00	-0.00	▷ 6.07	-2.13	BC 20
				Min M_y	10.15	7.10	10.16	-3.35	▷ -17.04	10.25	BC 9
				Max M_z	10.72	7.73	10.13	-3.50	-16.96	▷ 10.91	BC 8
				Min M_z	-5.31	-2.46	-3.37	1.29	5.64	▷ -3.90	BC 15
			0.583	Max N	▷ 11.04	7.56	9.38	-3.51	-11.23	6.45	BC 8
			Links	Min N	▷ -5.22	-2.50	-3.27	1.29	3.68	-2.46	BC 15
				Max V_y	11.04	▷ 7.56	9.38	-3.51	-11.23	6.45	BC 8
				Min V_y	-4.35	▷ -2.81	-1.16	0.28	5.29	-1.76	BC 21
				Max V_z	10.47	6.93	▷ 9.40	-3.36	-11.30	6.16	BC 9
				Min V_z	-4.10	-1.28	▷ -3.32	1.00	3.82	-1.91	BC 14
				Max M_T	-0.94	-0.72	3.75	▷ 1.55	-7.13	-0.97	BC 23
				Min M_T	9.97	7.13	7.62	▷ -3.57	-8.56	6.10	BC 12
				Max M_y	-3.24	-1.59	-1.20	-0.00	▷ 5.43	-1.22	BC 20
				Min M_y	10.47	6.93	9.40	-3.36	▷ -11.30	6.16	BC 9
				Max M_z	11.04	7.56	9.38	-3.51	-11.23	▷ 6.45	BC 8
				Min M_z	-5.22	-2.50	-3.27	1.29	3.68	▷ -2.46	BC 15
			0.583	Max N	▷ 11.04	7.56	9.38	-3.51	-11.23	6.45	BC 8
			Rechts	Min N	▷ -5.22	-2.50	-3.27	1.29	3.68	-2.46	BC 15

4.12 DOORSNEDES - SNEDEKRACHTEN

Resultaatcombinaties

Staaf No.	RC	Knoop No.	Snede x [m]		Krachten [kN] N	V_y	V_z	Momenten [kNm] M_T	M_y	M_z	Bijbehorend Belastingsgeval
40	RC1			Max V_y	11.04	▷ 7.56	9.38	-3.51	-11.23	6.45	BC 8
				Min V_y	-4.35	▷ -2.81	-1.16	0.28	5.29	-1.76	BC 21
				Max V_z	10.47	6.93	▷ 9.40	-3.36	-11.30	6.16	BC 9
				Min V_z	-4.10	-1.28	▷ -3.32	1.00	3.82	-1.91	BC 14
				Max M_T	-0.94	-0.72	3.75	▷ 1.55	-7.13	-0.97	BC 23
				Min M_T	9.97	7.13	7.62	▷ -3.57	-8.56	6.10	BC 12
				Max M_y	-3.24	-1.59	-1.20	-0.00	▷ 5.43	-1.22	BC 20
				Min M_y	10.47	6.93	9.40	-3.36	▷ -11.30	6.16	BC 9
				Max M_z	11.04	7.56	9.38	-3.51	-11.23	▷ 6.45	BC 8
				Min M_z	-5.22	-2.50	-3.27	1.29	3.68	▷ -2.46	BC 15
			0.679	Max N	▷ 11.12	7.51	9.17	-3.51	-10.33	5.73	BC 8
			Links	Min N	▷ -5.20	-2.50	-3.21	1.29	3.37	-2.21	BC 15
				Max V_y	11.12	▷ 7.51	9.17	-3.51	-10.33	5.73	BC 8
				Min V_y	-4.33	▷ -2.81	-1.20	0.28	5.18	-1.49	BC 21
				Max V_z	10.55	6.89	▷ 9.19	-3.36	-10.40	5.50	BC 9
				Min V_z	-4.08	-1.29	▷ -3.25	1.00	3.50	-1.79	BC 14
				Max M_T	-0.92	-0.72	3.71	▷ 1.54	-6.77	-0.90	BC 23
				Min M_T	10.05	7.09	7.44	▷ -3.57	-7.83	5.41	BC 12
				Max M_y	-3.22	-1.59	-1.24	-0.00	▷ 5.31	-1.06	BC 20
				Min M_y	10.55	6.89	9.19	-3.36	▷ -10.40	5.50	BC 9
				Max M_z	11.12	7.51	9.17	-3.51	-10.33	▷ 5.73	BC 8
				Min M_z	-5.20	-2.50	-3.21	1.29	3.37	▷ -2.21	BC 15
			0.679	Max N	▷ 11.12	7.51	9.17	-3.51	-10.33	5.73	BC 8
			Rechts	Min N	▷ -5.20	-2.50	-3.21	1.29	3.37	-2.21	BC 15
				Max V_y	11.12	▷ 7.51	9.17	-3.51	-10.33	5.73	BC 8
				Min V_y	-4.33	▷ -2.81	-1.20	0.28	5.18	-1.49	BC 21
				Max V_z	10.55	6.89	▷ 9.19	-3.36	-10.40	5.50	BC 9
				Min V_z	-4.08	-1.29	▷ -3.25	1.00	3.50	-1.79	BC 14
				Max M_T	-0.92	-0.72	3.71	▷ 1.54	-6.77	-0.90	BC 23
				Min M_T	10.05	7.09	7.44	▷ -3.57	-7.83	5.41	BC 12
				Max M_y	-3.22	-1.59	-1.24	-0.00	▷ 5.31	-1.06	BC 20
				Min M_y	10.55	6.89	9.19	-3.36	▷ -10.40	5.50	BC 9
				Max M_z	11.12	7.51	9.17	-3.51	-10.33	▷ 5.73	BC 8
				Min M_z	-5.20	-2.50	-3.21	1.29	3.37	▷ -2.21	BC 15
			2.552	Max N	▷ 12.72	6.68	5.12	-3.52	3.01	-7.54	BC 8
			Links	Min N	▷ -4.85	-2.61	-2.02	1.29	-1.53	2.58	BC 15
				Max V_y	12.72	▷ 6.68	5.12	-3.52	3.01	-7.54	BC 8
				Min V_y	-3.98	▷ -2.91	-2.02	0.28	2.16	3.87	BC 21
				Max V_z	12.72	6.68	▷ 5.12	-3.52	3.01	-7.54	BC 8
				Min V_z	-4.85	-2.61	▷ -2.02	1.29	-1.53	2.58	BC 15
				Max M_T	-0.57	-0.82	2.89	▷ 1.52	-0.59	0.54	BC 23
				Min M_T	11.64	6.25	3.90	▷ -3.57	2.75	-7.05	BC 12
				Max M_y	11.40	5.83	4.40	-3.41	▷ 3.52	-6.43	BC 10
				Min M_y	-4.85	-2.61	-2.02	1.29	▷ -1.53	2.58	BC 15
				Max M_z	-3.98	-2.91	-2.02	0.28	2.16	▷ 3.87	BC 21
				Min M_z	12.72	6.68	5.12	-3.52	3.01	▷ -7.54	BC 8
			2.552	Max N	▷ 12.72	6.68	5.12	-3.52	3.01	-7.54	BC 8
			Rechts	Min N	▷ -4.85	-2.61	-2.02	1.29	-1.53	2.58	BC 15
				Max V_y	12.72	▷ 6.68	5.12	-3.52	3.01	-7.54	BC 8
				Min V_y	-3.98	▷ -2.91	-2.02	0.28	2.16	3.87	BC 21
				Max V_z	12.72	6.68	▷ 5.12	-3.52	3.01	-7.54	BC 8
				Min V_z	-4.85	-2.61	▷ -2.02	1.29	-1.53	2.58	BC 15
				Max M_T	-0.57	-0.82	2.89	▷ 1.52	-0.59	0.54	BC 23
				Min M_T	11.64	6.25	3.90	▷ -3.57	2.75	-7.05	BC 12
				Max M_y	11.40	5.83	4.40	-3.41	▷ 3.52	-6.43	BC 10
				Min M_y	-4.85	-2.61	-2.02	1.29	▷ -1.53	2.58	BC 15
				Max M_z	-3.98	-2.91	-2.02	0.28	2.16	▷ 3.87	BC 21
				Min M_z	12.72	6.68	5.12	-3.52	3.01	▷ -7.54	BC 8
			2.581	Max N	▷ 12.74	6.67	5.06	-3.52	3.16	-7.73	BC 8
			Links	Min N	▷ -4.85	-2.61	-2.00	1.29	-1.58	2.65	BC 15
				Max V_y	12.74	▷ 6.67	5.06	-3.52	3.16	-7.73	BC 8
				Min V_y	-3.98	▷ -2.91	-2.03	0.28	2.10	3.95	BC 21
				Max V_z	12.74	6.67	▷ 5.06	-3.52	3.16	-7.73	BC 8
				Min V_z	-3.98	-2.91	▷ -2.03	0.28	2.10	3.95	BC 21
				Max M_T	-0.57	-0.82	2.88	▷ 1.52	-0.51	0.57	BC 23
				Min M_T	11.67	6.24	3.85	▷ -3.57	2.86	-7.23	BC 12
				Max M_y	11.43	5.81	4.34	-3.41	▷ 3.65	-6.59	BC 10
				Min M_y	-4.85	-2.61	-2.00	1.29	▷ -1.58	2.65	BC 15
				Max M_z	-3.98	-2.91	-2.03	0.28	2.10	▷ 3.95	BC 21
				Min M_z	12.74	6.67	5.06	-3.52	3.16	▷ -7.73	BC 8
			2.581	Max N	▷ 12.74	6.67	5.06	-3.52	3.16	-7.73	BC 8
			Rechts	Min N	▷ -4.85	-2.61	-2.00	1.29	-1.58	2.65	BC 15
				Max V_y	12.74	▷ 6.67	5.06	-3.52	3.16	-7.73	BC 8
				Min V_y	-3.98	▷ -2.91	-2.03	0.28	2.10	3.95	BC 21
				Max V_z	12.74	6.67	▷ 5.06	-3.52	3.16	-7.73	BC 8
				Min V_z	-3.98	-2.91	▷ -2.03	0.28	2.10	3.95	BC 21
				Max M_T	-0.57	-0.82	2.88	▷ 1.52	-0.51	0.57	BC 23
				Min M_T	11.67	6.24	3.85	▷ -3.57	2.86	-7.23	BC 12
				Max M_y	11.43	5.81	4.34	-3.41	▷ 3.65	-6.59	BC 10
				Min M_y	-4.85	-2.61	-2.00	1.29	▷ -1.58	2.65	BC 15
				Max M_z	-3.98	-2.91	-2.03	0.28	2.10	▷ 3.95	BC 21
				Min M_z	12.74	6.67	5.06	-3.52	3.16	▷ -7.73	BC 8
			3.260	Max N	▷ 13.05	6.52	4.26	-3.52	6.25	-12.20	BC 8
			Links	Min N	▷ -4.75	-2.65	-1.90	1.29	-2.87	4.44	BC 15

4.12 DOORSNEDES - SNEDEKRACHTEN

Resultaatcombinaties

Staaf No.	RC	Knoop No.	Snede x [m]		Krachten [kN] N	V_y	V_z	Momenten [kNm] M_T	M_y	M_z	Bijbehorend Belastingsgeval
40	RC1			Max V_y	13.05	⊳ 6.52	4.26	-3.52	6.25	-12.20	BC 8
				Min V_y	-3.88	⊳ -2.95	-2.28	0.29	0.63	5.95	BC 21
				Max V_z	13.05	6.52	⊳ 4.26	-3.52	6.25	-12.20	BC 8
				Min V_z	-3.88	-2.95	⊳ -2.28	0.29	0.63	5.95	BC 21
				Max M_T	-0.46	-0.85	2.64	⊳ 1.51	1.36	1.14	BC 23
				Min M_T	11.98	6.08	3.13	⊳ -3.56	5.16	-11.40	BC 12
				Max M_y	13.05	6.52	4.26	-3.52	⊳ 6.25	-12.20	BC 8
				Min M_y	-4.75	-2.65	-1.90	1.29	⊳ -2.87	4.44	BC 15
				Max M_z	-3.88	-2.95	-2.28	0.29	0.63	⊳ 5.95	BC 21
				Min M_z	13.05	6.52	4.26	-3.52	6.25	⊳ -12.20	BC 8
		38	3.260	Max N	⊳ 13.05	6.52	4.26	-3.52	6.25	-12.20	BC 8
			Rechts	Min N	⊳ -4.75	-2.65	-1.90	1.29	-2.87	4.44	BC 15
				Max V_y	13.05	⊳ 6.52	4.26	-3.52	6.25	-12.20	BC 8
				Min V_y	-3.88	⊳ -2.95	-2.28	0.29	0.63	5.95	BC 21
				Max V_z	13.05	6.52	⊳ 4.26	-3.52	6.25	-12.20	BC 8
				Min V_z	-3.88	-2.95	⊳ -2.28	0.29	0.63	5.95	BC 21
				Max M_T	-0.46	-0.85	2.64	⊳ 1.51	1.36	1.14	BC 23
				Min M_T	11.98	6.08	3.13	⊳ -3.56	5.16	-11.40	BC 12
				Max M_y	13.05	6.52	4.26	-3.52	⊳ 6.25	-12.20	BC 8
				Min M_y	-4.75	-2.65	-1.90	1.29	⊳ -2.87	4.44	BC 15
				Max M_z	-3.88	-2.95	-2.28	0.29	0.63	⊳ 5.95	BC 21
				Min M_z	13.05	6.52	4.26	-3.52	6.25	⊳ -12.20	BC 8
41	RC1	39	0.000	Max N	⊳ 6.48	-2.11	2.86	1.04	-4.26	-4.78	BC 21
			Links	Min N	⊳ -5.89	2.74	-7.98	-2.11	15.19	3.26	BC 14
				Max V_y	-4.22	⊳ 3.64	-5.73	-1.39	5.29	3.44	BC 22
				Min V_y	6.48	⊳ -2.11	2.86	1.04	-4.26	-4.78	BC 21
				Max V_z	2.21	0.16	⊳ 22.14	3.76	-43.53	2.17	BC 9
				Min V_z	-5.89	2.74	⊳ -7.98	-2.11	15.19	3.26	BC 14
				Max M_T	3.97	-0.54	22.05	⊳ 3.91	-42.96	0.71	BC 11
				Min M_T	-5.89	2.74	-7.98	⊳ -2.11	15.19	3.26	BC 14
				Max M_y	-5.89	2.74	-7.98	-2.11	⊳ 15.19	3.26	BC 14
				Min M_y	2.21	0.16	22.14	3.76	⊳ -43.53	2.17	BC 9
				Max M_z	0.44	2.02	18.43	2.51	-36.04	⊳ 4.77	BC 2
				Min M_z	6.48	-2.11	2.86	1.04	-4.26	⊳ -4.78	BC 21
			0.000	Max N	⊳ 6.48	-2.11	2.86	1.04	-4.26	-4.78	BC 21
			Rechts	Min N	⊳ -5.89	2.74	-7.98	-2.11	15.19	3.26	BC 14
				Max V_y	-4.22	⊳ 3.64	-5.73	-1.39	5.29	3.44	BC 22
				Min V_y	6.48	⊳ -2.11	2.86	1.04	-4.26	-4.78	BC 21
				Max V_z	2.21	0.16	⊳ 22.14	3.76	-43.53	2.17	BC 9
				Min V_z	-5.89	2.74	⊳ -7.98	-2.11	15.19	3.26	BC 14
				Max M_T	3.97	-0.54	22.05	⊳ 3.91	-42.96	0.71	BC 11
				Min M_T	-5.89	2.74	-7.98	⊳ -2.11	15.19	3.26	BC 14
				Max M_y	-5.89	2.74	-7.98	-2.11	⊳ 15.19	3.26	BC 14
				Min M_y	2.21	0.16	22.14	3.76	⊳ -43.53	2.17	BC 9
				Max M_z	0.44	2.02	18.43	2.51	-36.03	⊳ 4.77	BC 2
				Min M_z	6.48	-2.11	2.86	1.04	-4.26	⊳ -4.78	BC 21
			0.583	Max N	⊳ 6.56	-2.19	2.65	1.04	-2.65	-3.53	BC 21
			Links	Min N	⊳ -5.83	2.24	-7.87	-2.11	10.55	1.81	BC 14
				Max V_y	-4.16	⊳ 3.14	-5.63	-1.37	1.95	1.46	BC 22
				Min V_y	6.56	⊳ -2.19	2.65	1.04	-2.65	-3.53	BC 21
				Max V_z	2.47	-0.12	⊳ 21.35	3.77	-30.80	2.14	BC 9
				Min V_z	-5.83	2.24	⊳ -7.87	-2.11	10.55	1.81	BC 14
				Max M_T	4.23	-0.82	21.26	⊳ 3.91	-30.28	1.10	BC 11
				Min M_T	-5.83	2.24	-7.87	⊳ -2.11	10.55	1.81	BC 14
				Max M_y	-5.83	2.24	-7.87	-2.11	⊳ 10.55	1.81	BC 14
				Min M_y	2.47	-0.12	21.35	3.77	⊳ -30.80	2.14	BC 9
				Max M_z	-0.13	0.93	16.63	2.14	-21.19	⊳ 3.92	BC 6
				Min M_z	6.56	-2.19	2.65	1.04	-2.65	⊳ -3.53	BC 21
			0.583	Max N	⊳ 6.56	-2.19	2.65	1.04	-2.65	-3.53	BC 21
			Rechts	Min N	⊳ -5.83	2.24	-7.87	-2.11	10.55	1.81	BC 14
				Max V_y	-4.16	⊳ 3.14	-5.63	-1.37	1.95	1.46	BC 22
				Min V_y	6.56	⊳ -2.19	2.65	1.04	-2.65	-3.53	BC 21
				Max V_z	2.47	-0.12	⊳ 21.35	3.77	-30.80	2.14	BC 9
				Min V_z	-5.83	2.24	⊳ -7.87	-2.11	10.55	1.81	BC 14
				Max M_T	4.23	-0.82	21.26	⊳ 3.91	-30.28	1.10	BC 11
				Min M_T	-5.83	2.24	-7.87	⊳ -2.11	10.55	1.81	BC 14
				Max M_y	-5.83	2.24	-7.87	-2.11	⊳ 10.55	1.81	BC 14
				Min M_y	2.47	-0.12	21.35	3.77	⊳ -30.80	2.14	BC 9
				Max M_z	-0.13	0.93	16.63	2.14	-21.19	⊳ 3.92	BC 6
				Min M_z	6.56	-2.19	2.65	1.04	-2.65	⊳ -3.53	BC 21
			0.645	Max N	⊳ 6.57	-2.20	2.63	1.04	-2.49	-3.40	BC 21
			Links	Min N	⊳ -5.82	2.18	-7.84	-2.11	10.06	1.67	BC 14
				Max V_y	-4.15	⊳ 3.08	-5.59	-1.36	1.60	1.27	BC 22
				Min V_y	6.57	⊳ -2.20	2.63	1.04	-2.49	-3.40	BC 21
				Max V_z	2.51	-0.17	⊳ 21.20	3.77	-29.48	2.15	BC 9
				Min V_z	-5.82	2.18	⊳ -7.84	-2.11	10.06	1.67	BC 14
				Max M_T	4.27	-0.87	21.11	⊳ 3.91	-28.96	1.15	BC 11
				Min M_T	-5.82	2.18	-7.84	⊳ -2.11	10.06	1.67	BC 14
				Max M_y	-5.82	2.18	-7.84	-2.11	⊳ 10.06	1.67	BC 14
				Min M_y	2.51	-0.17	21.20	3.77	⊳ -29.48	2.15	BC 9
				Max M_z	-0.10	0.85	16.50	2.14	-20.15	⊳ 3.86	BC 6
				Min M_z	6.57	-2.20	2.63	1.04	-2.49	⊳ -3.40	BC 21
			0.645	Max N	⊳ 6.57	-2.20	2.63	1.04	-2.49	-3.40	BC 21
			Rechts	Min N	⊳ -5.82	2.18	-7.84	-2.11	10.06	1.67	BC 14

4.12 DOORSNEDES - SNEDEKRACHTEN

Resultaatcombinaties

Staaf No.	RC	Knoop No.	Snede x [m]		Krachten [kN] N	V_y	V_z	Momenten [kNm] M_T	M_y	M_z	Bijbehorend Belastingsgeval
41	RC1			Max V_y	-4.15	▷ 3.08	-5.59	-1.36	1.60	1.27	BC 22
				Min V_y	6.57	▷ -2.20	2.63	1.04	-2.49	-3.40	BC 21
				Max V_z	2.51	-0.17	▷ 21.20	3.77	-29.48	2.15	BC 9
				Min V_z	-5.82	2.18	▷ -7.84	-2.11	10.06	1.67	BC 14
				Max M_T	4.27	-0.87	21.11	▷ 3.91	-28.96	1.15	BC 11
				Min M_T	-5.82	2.18	-7.84	▷ -2.11	10.06	1.67	BC 14
				Max M_y	-5.82	2.18	-7.84	-2.11	▷ 10.06	1.67	BC 14
				Min M_y	2.51	-0.17	21.20	3.77	▷ -29.48	2.15	BC 9
				Max M_z	-0.10	0.85	16.50	2.14	-20.15	▷ 3.86	BC 6
				Min M_z	6.57	-2.20	2.63	1.04	-2.49	▷ -3.40	BC 21
			1.290	Max N	▷ 6.64	-2.28	2.41	1.04	-0.87	-1.95	BC 21
			Links	Min N	▷ -5.75	1.63	-7.74	-2.10	5.06	0.45	BC 14
				Max V_y	-4.09	▷ 2.52	-5.49	-1.34	-1.94	-0.54	BC 22
				Min V_y	6.64	▷ -2.28	2.41	1.04	-0.87	-1.95	BC 21
				Max V_z	2.78	-0.49	▷ 20.30	3.77	-16.17	2.41	BC 9
				Min V_z	-5.75	1.63	▷ -7.74	-2.10	5.06	0.45	BC 14
				Max M_T	4.53	-1.20	20.21	▷ 3.91	-15.71	1.86	BC 11
				Min M_T	-5.75	1.63	-7.74	▷ -2.10	5.06	0.45	BC 14
				Max M_y	-5.75	1.63	-7.74	-2.10	▷ 5.06	0.45	BC 14
				Min M_y	2.78	-0.49	20.30	3.77	▷ -16.17	2.41	BC 9
				Max M_z	0.09	0.13	15.72	2.15	-9.82	▷ 3.57	BC 6
				Min M_z	6.64	-2.28	2.41	1.04	-0.87	▷ -1.95	BC 21
		59	1.290	Max N	▷ 6.64	-2.28	2.41	1.04	-0.87	-1.95	BC 21
			Rechts	Min N	▷ -5.75	1.63	-7.74	-2.10	5.06	0.45	BC 14
				Max V_y	-4.09	▷ 2.52	-5.49	-1.34	-1.94	-0.54	BC 22
				Min V_y	6.64	▷ -2.28	2.41	1.04	-0.87	-1.95	BC 21
				Max V_z	2.78	-0.49	▷ 20.30	3.77	-16.17	2.41	BC 9
				Min V_z	-5.75	1.63	▷ -7.74	-2.10	5.06	0.45	BC 14
				Max M_T	4.53	-1.20	20.21	▷ 3.91	-15.71	1.86	BC 11
				Min M_T	-5.75	1.63	-7.74	▷ -2.10	5.06	0.45	BC 14
				Max M_y	-5.75	1.63	-7.74	-2.10	▷ 5.06	0.45	BC 14
				Min M_y	2.78	-0.49	20.30	3.77	▷ -16.17	2.41	BC 9
				Max M_z	0.09	0.13	15.72	2.15	-9.82	▷ 3.57	BC 6
				Min M_z	6.64	-2.28	2.41	1.04	-0.87	▷ -1.95	BC 21
42	RC1	164	0.000	Max N	▷ 10.76	8.38	-9.96	3.91	16.60	11.51	BC 9
			Links	Min N	▷ -4.21	-1.23	3.42	-1.00	-5.81	-2.64	BC 14
				Max V_y	10.76	▷ 8.38	-9.96	3.91	16.60	11.51	BC 9
				Min V_y	-3.34	▷ -1.54	1.00	0.00	-6.07	-2.13	BC 20
				Max V_z	-2.31	1.27	▷ 5.75	1.37	-12.27	0.58	BC 23
				Min V_z	10.26	7.38	▷ -10.64	3.08	18.39	10.32	BC 12
				Max M_T	10.76	8.38	-9.96	▷ 3.91	16.60	11.51	BC 9
				Min M_T	-4.21	-1.23	3.42	▷ -1.00	-5.81	-2.64	BC 14
				Max M_y	10.26	7.38	-10.64	3.08	▷ 18.39	10.32	BC 12
				Min M_y	-2.31	1.27	5.75	1.37	▷ -12.27	0.58	BC 23
				Max M_z	10.76	8.38	-9.96	3.91	16.60	▷ 11.51	BC 9
				Min M_z	-4.21	-1.23	3.42	-1.00	-5.81	▷ -2.64	BC 14
			0.000	Max N	▷ 10.76	8.38	-9.96	3.91	16.60	11.51	BC 9
			Rechts	Min N	▷ -4.21	-1.23	3.42	-1.00	-5.81	-2.64	BC 14
				Max V_y	10.76	▷ 8.38	-9.96	3.91	16.60	11.51	BC 9
				Min V_y	-3.34	▷ -1.54	1.00	0.00	-6.07	-2.13	BC 20
				Max V_z	-2.31	1.27	▷ 5.75	1.37	-12.27	0.58	BC 23
				Min V_z	10.26	7.38	▷ -10.64	3.08	18.39	10.32	BC 12
				Max M_T	10.76	8.38	-9.96	▷ 3.91	16.60	11.51	BC 9
				Min M_T	-4.21	-1.23	3.42	▷ -1.00	-5.81	-2.64	BC 14
				Max M_y	10.26	7.38	-10.64	3.08	▷ 18.39	10.32	BC 12
				Min M_y	-2.31	1.27	5.75	1.37	▷ -12.27	0.58	BC 23
				Max M_z	10.76	8.38	-9.96	3.91	16.60	▷ 11.51	BC 9
				Min M_z	-4.21	-1.23	3.42	-1.00	-5.81	▷ -2.64	BC 14
			0.583	Max N	▷ 11.07	7.99	-9.21	3.91	10.97	6.74	BC 9
			Links	Min N	▷ -4.10	-1.28	3.32	-1.00	-3.82	-1.91	BC 14
				Max V_y	11.07	▷ 7.99	-9.21	3.91	10.97	6.74	BC 9
				Min V_y	-3.24	▷ -1.59	1.20	0.00	-5.43	-1.22	BC 20
				Max V_z	-2.22	0.81	▷ 5.64	1.39	-8.93	-0.03	BC 23
				Min V_z	10.58	7.21	▷ -9.88	3.09	12.37	6.06	BC 12
				Max M_T	11.07	7.99	-9.21	▷ 3.91	10.97	6.74	BC 9
				Min M_T	-4.10	-1.28	3.32	▷ -1.00	-3.82	-1.91	BC 14
				Max M_y	9.08	6.09	-9.42	1.99	▷ 12.63	4.78	BC 6
				Min M_y	-2.22	0.81	5.64	1.39	▷ -8.93	-0.03	BC 23
				Max M_z	11.07	7.99	-9.21	3.91	10.97	▷ 6.74	BC 9
				Min M_z	-4.10	-1.28	3.32	-1.00	-3.82	▷ -1.91	BC 14
			0.583	Max N	▷ 11.07	7.99	-9.21	3.91	10.97	6.74	BC 9
			Rechts	Min N	▷ -4.10	-1.28	3.32	-1.00	-3.82	-1.91	BC 14
				Max V_y	11.07	▷ 7.99	-9.21	3.91	10.97	6.74	BC 9
				Min V_y	-3.24	▷ -1.59	1.20	0.00	-5.43	-1.22	BC 20
				Max V_z	-2.22	0.81	▷ 5.64	1.39	-8.93	-0.03	BC 23
				Min V_z	10.58	7.21	▷ -9.88	3.09	12.37	6.06	BC 12
				Max M_T	11.07	7.99	-9.21	▷ 3.91	10.97	6.74	BC 9
				Min M_T	-4.10	-1.28	3.32	▷ -1.00	-3.82	-1.91	BC 14
				Max M_y	9.08	6.09	-9.42	1.99	▷ 12.63	4.78	BC 6
				Min M_y	-2.22	0.81	5.64	1.39	▷ -8.93	-0.03	BC 23
				Max M_z	11.07	7.99	-9.21	3.91	10.97	▷ 6.74	BC 9
				Min M_z	-4.10	-1.28	3.32	-1.00	-3.82	▷ -1.91	BC 14
			0.679	Max N	▷ 11.16	7.91	-9.00	3.91	10.09	5.98	BC 9
			Links	Min N	▷ -4.08	-1.29	3.25	-1.00	-3.50	-1.79	BC 14

4.12 DOORSNEDES - SNEDEKRACHTEN

Resultaatcombinaties

Staaf No.	RC	Knoop No.	Snede x [m]		Krachten [kN] N	V_y	V_z	Momenten [kNm] M_T	M_y	M_z	Bijbehorend Belastingsgeval
42	RC1			Max V_y	11.16	▷ 7.91	-9.00	3.91	10.09	5.98	BC 9
				Min V_y	-3.22	▷ -1.59	1.24	0.00	-5.31	-1.06	BC 20
				Max V_z	-2.20	0.72	▷ 5.58	1.39	-8.39	-0.11	BC 23
				Min V_z	10.66	7.16	▷ -9.67	3.09	11.43	5.37	BC 12
				Max M_T	11.16	7.91	-9.00	▷ 3.91	10.09	5.98	BC 9
				Min M_T	-4.08	-1.29	3.25	▷ -1.00	-3.50	-1.79	BC 14
				Max M_y	9.14	6.06	-9.23	1.99	▷ 11.73	4.20	BC 6
				Min M_y	-2.20	0.72	5.58	1.39	▷ -8.39	-0.11	BC 23
				Max M_z	11.16	7.91	-9.00	3.91	10.09	▷ 5.98	BC 9
				Min M_z	-4.08	-1.29	3.25	-1.00	-3.50	▷ -1.79	BC 14
			0.679	Max N	▷ 11.16	7.91	-9.00	3.91	10.09	5.98	BC 9
			Rechts	Min N	▷ -4.08	-1.29	3.25	-1.00	-3.50	-1.79	BC 14
				Max V_y	11.16	▷ 7.91	-9.00	3.91	10.09	5.98	BC 9
				Min V_y	-3.22	▷ -1.59	1.24	0.00	-5.31	-1.06	BC 20
				Max V_z	-2.20	0.72	▷ 5.58	1.39	-8.39	-0.11	BC 23
				Min V_z	10.66	7.16	▷ -9.67	3.09	11.42	5.37	BC 12
				Max M_T	11.16	7.91	-9.00	▷ 3.91	10.09	5.98	BC 9
				Min M_T	-4.08	-1.29	3.25	▷ -1.00	-3.50	-1.79	BC 14
				Max M_y	9.14	6.06	-9.23	1.99	▷ 11.73	4.19	BC 6
				Min M_y	-2.20	0.72	5.58	1.39	▷ -8.39	-0.11	BC 23
				Max M_z	11.16	7.91	-9.00	3.91	10.09	▷ 5.98	BC 9
				Min M_z	-4.08	-1.29	3.25	-1.00	-3.50	▷ -1.79	BC 14
			2.552	Max N	▷ 12.72	6.68	-5.12	3.52	-3.01	-7.54	BC 8
			Links	Min N	▷ -3.67	-2.13	2.35	-0.20	1.56	1.17	BC 15
				Max V_y	12.72	▷ 6.68	-5.12	3.52	-3.01	-7.54	BC 8
				Min V_y	-2.81	▷ -2.43	2.34	0.80	-2.13	2.47	BC 21
				Max V_z	-1.86	-0.86	▷ 4.34	1.43	0.90	0.01	BC 23
				Min V_z	10.36	5.47	▷ -5.65	2.03	-2.18	-6.59	BC 6
				Max M_T	12.71	6.36	-4.95	▷ 3.92	-2.94	-7.36	BC 9
				Min M_T	-3.66	-1.47	2.01	▷ -1.00	1.43	0.80	BC 14
				Max M_y	-3.67	-2.13	2.35	-0.20	▷ 1.56	1.17	BC 15
				Min M_y	11.40	5.83	-4.40	3.41	▷ -3.52	-6.43	BC 10
				Max M_z	-2.81	-2.43	2.34	0.80	-2.13	▷ 2.47	BC 21
				Min M_z	12.72	6.68	-5.12	3.52	-3.01	▷ -7.54	BC 8
			2.552	Max N	▷ 12.72	6.68	-5.12	3.52	-3.01	-7.54	BC 8
			Rechts	Min N	▷ -3.67	-2.13	2.35	-0.20	1.56	1.17	BC 15
				Max V_y	12.72	▷ 6.68	-5.12	3.52	-3.01	-7.54	BC 8
				Min V_y	-2.81	▷ -2.43	2.34	0.80	-2.13	2.47	BC 21
				Max V_z	-1.86	-0.86	▷ 4.34	1.43	0.90	0.01	BC 23
				Min V_z	10.36	5.47	▷ -5.65	2.03	-2.18	-6.59	BC 6
				Max M_T	12.71	6.36	-4.95	▷ 3.92	-2.94	-7.36	BC 9
				Min M_T	-3.66	-1.47	2.01	▷ -1.00	1.43	0.80	BC 14
				Max M_y	-3.67	-2.13	2.35	-0.20	▷ 1.56	1.17	BC 15
				Min M_y	11.40	5.83	-4.40	3.41	▷ -3.52	-6.43	BC 10
				Max M_z	-2.81	-2.43	2.34	0.80	-2.13	▷ 2.47	BC 21
				Min M_z	12.72	6.68	-5.12	3.52	-3.01	▷ -7.54	BC 8
			2.581	Max N	▷ 12.74	6.67	-5.06	3.52	-3.16	-7.73	BC 8
			Links	Min N	▷ -3.66	-2.15	2.33	-0.20	1.62	1.23	BC 15
				Max V_y	12.74	▷ 6.67	-5.06	3.52	-3.16	-7.73	BC 8
				Min V_y	-2.80	▷ -2.46	2.35	0.80	-2.07	2.53	BC 21
				Max V_z	-1.85	-0.88	▷ 4.32	1.43	1.02	0.04	BC 23
				Min V_z	10.38	5.46	▷ -5.59	2.03	-2.34	-6.74	BC 6
				Max M_T	12.73	6.34	-4.89	▷ 3.92	-3.07	-7.54	BC 9
				Min M_T	-3.65	-1.47	2.00	▷ -1.00	1.49	0.84	BC 14
				Max M_y	-3.66	-2.15	2.33	-0.20	▷ 1.62	1.23	BC 15
				Min M_y	11.43	5.81	-4.34	3.41	▷ -3.65	-6.59	BC 10
				Max M_z	-2.80	-2.46	2.35	0.80	-2.07	▷ 2.53	BC 21
				Min M_z	12.74	6.67	-5.06	3.52	-3.16	▷ -7.73	BC 8
			2.581	Max N	▷ 12.74	6.67	-5.06	3.52	-3.16	-7.73	BC 8
			Rechts	Min N	▷ -3.66	-2.15	2.33	-0.20	1.62	1.23	BC 15
				Max V_y	12.74	▷ 6.67	-5.06	3.52	-3.16	-7.73	BC 8
				Min V_y	-2.80	▷ -2.46	2.35	0.80	-2.07	2.53	BC 21
				Max V_z	-1.85	-0.88	▷ 4.32	1.43	1.02	0.04	BC 23
				Min V_z	10.38	5.46	▷ -5.59	2.03	-2.34	-6.74	BC 6
				Max M_T	12.73	6.34	-4.89	▷ 3.92	-3.07	-7.54	BC 9
				Min M_T	-3.65	-1.47	2.00	▷ -1.00	1.49	0.84	BC 14
				Max M_y	-3.66	-2.15	2.33	-0.20	▷ 1.62	1.23	BC 15
				Min M_y	11.43	5.81	-4.34	3.41	▷ -3.65	-6.59	BC 10
				Max M_z	-2.80	-2.46	2.35	0.80	-2.07	▷ 2.53	BC 21
				Min M_z	12.74	6.67	-5.06	3.52	-3.16	▷ -7.73	BC 8
			3.260	Max N	▷ 13.05	6.52	-4.26	3.52	-6.25	-12.20	BC 8
			Links	Min N	▷ -3.56	-2.70	2.22	-0.20	3.13	2.88	BC 15
				Max V_y	13.05	▷ 6.52	-4.26	3.52	-6.25	-12.20	BC 8
				Min V_y	-2.70	▷ -3.01	2.59	0.80	-0.38	4.39	BC 21
				Max V_z	-1.75	-1.42	▷ 4.21	1.45	3.89	0.83	BC 23
				Min V_z	10.63	5.34	▷ -4.85	2.05	-5.83	-10.40	BC 6
				Max M_T	13.04	5.94	-4.09	▷ 3.92	-6.05	-11.70	BC 9
				Min M_T	-3.53	-1.53	1.88	▷ -1.00	2.77	1.86	BC 14
				Max M_y	-1.75	-1.42	4.21	1.45	▷ 3.89	0.83	BC 23
				Min M_y	12.59	6.17	-4.76	3.13	▷ -6.45	-11.66	BC 12
				Max M_z	-2.70	-3.01	2.59	0.80	-0.38	▷ 4.39	BC 21
				Min M_z	13.05	6.52	-4.26	3.52	-6.25	▷ -12.20	BC 8
		40	3.260	Max N	▷ 13.05	6.52	-4.26	3.52	-6.25	-12.20	BC 8
			Rechts	Min N	▷ -3.56	-2.70	2.22	-0.20	3.13	2.88	BC 15

4.12 DOORSNEDES - SNEDEKRACHTEN

Resultaatcombinaties

Staaf No.	RC	Knoop No.	Snede x [m]		Krachten [kN] N	V_y	V_z	Momenten [kNm] M_T	M_y	M_z	Bijbehorend Belastingsgeval
42	RC1			Max V_y	13.05	⊳ 6.52	-4.26	3.52	-6.25	-12.20	BC 8
				Min V_y	-2.70	⊳ -3.01	2.59	0.80	-0.38	4.39	BC 21
				Max V_z	-1.75	-1.42	⊳ 4.21	1.45	3.89	0.83	BC 23
				Min V_z	10.63	5.34	⊳ -4.85	2.05	-5.83	-10.40	BC 6
				Max M_T	13.04	5.94	-4.09	⊳ 3.92	-6.05	-11.70	BC 9
				Min M_T	-3.53	-1.53	1.88	⊳ -1.00	2.77	1.86	BC 14
				Max M_y	-1.75	-1.42	4.21	1.45	⊳ 3.89	0.83	BC 23
				Min M_y	12.59	6.17	-4.76	3.13	⊳ -6.45	-11.66	BC 12
				Max M_z	-2.70	-3.01	2.59	0.80	-0.38	⊳ 4.39	BC 21
				Min M_z	13.05	6.52	-4.26	3.52	-6.25	⊳ -12.20	BC 8
43	RC1	46	0.000	Max N	⊳ 4.77	0.29	20.79	2.68	-38.82	4.42	BC 9
			Links	Min N	⊳ -4.44	0.12	-6.84	-0.67	11.97	-2.07	BC 14
				Max V_y	1.75	⊳ 1.39	5.50	0.61	-13.58	2.35	BC 19
				Min V_y	-1.97	⊳ -1.12	1.36	0.23	2.22	-1.34	BC 22
				Max V_z	4.62	-0.10	⊳ 20.97	3.00	-39.13	3.41	BC 8
				Min V_z	-1.98	1.08	⊳ -7.23	-1.84	12.08	2.54	BC 21
				Max M_T	4.62	-0.10	20.97	⊳ 3.00	-39.13	3.41	BC 8
				Min M_T	-1.98	1.08	-7.23	⊳ -1.84	12.08	2.54	BC 21
				Max M_y	-4.18	0.87	-7.18	-1.28	⊳ 12.59	-0.09	BC 15
				Min M_y	4.62	-0.10	20.97	3.00	⊳ -39.13	3.41	BC 8
				Max M_z	4.18	0.43	18.25	2.17	-34.31	⊳ 4.74	BC 11
				Min M_z	-4.44	0.12	-6.84	-0.67	11.97	⊳ -2.07	BC 14
			0.000	Max N	⊳ 4.77	0.29	20.79	2.68	-38.82	4.42	BC 9
			Rechts	Min N	⊳ -4.44	0.12	-6.84	-0.67	11.97	-2.07	BC 14
				Max V_y	1.75	⊳ 1.39	5.50	0.61	-13.58	2.35	BC 19
				Min V_y	-1.97	⊳ -1.12	1.36	0.23	2.22	-1.34	BC 22
				Max V_z	4.62	-0.10	⊳ 20.97	3.00	-39.13	3.41	BC 8
				Min V_z	-1.98	1.08	⊳ -7.23	-1.84	12.08	2.54	BC 21
				Max M_T	4.62	-0.10	20.97	⊳ 3.00	-39.13	3.41	BC 8
				Min M_T	-1.98	1.08	-7.23	⊳ -1.84	12.08	2.54	BC 21
				Max M_y	-4.18	0.87	-7.18	-1.28	⊳ 12.59	-0.09	BC 15
				Min M_y	4.62	-0.10	20.97	3.00	⊳ -39.13	3.41	BC 8
				Max M_z	4.18	0.43	18.25	2.17	-34.31	⊳ 4.74	BC 11
				Min M_z	-4.44	0.12	-6.84	-0.67	11.97	⊳ -2.07	BC 14
			0.583	Max N	⊳ 5.00	0.00	20.00	2.69	-26.87	4.32	BC 9
			Links	Min N	⊳ -4.38	0.04	-6.74	-0.67	7.99	-2.11	BC 14
				Max V_y	1.83	⊳ 1.26	5.18	0.61	-10.46	1.57	BC 19
				Min V_y	-1.92	⊳ -1.19	1.15	0.23	2.95	-0.67	BC 22
				Max V_z	4.86	-0.38	⊳ 20.17	3.00	-27.09	3.53	BC 8
				Min V_z	-1.93	1.00	⊳ -7.13	-1.84	7.87	1.93	BC 21
				Max M_T	4.86	-0.38	20.17	⊳ 3.00	-27.09	3.53	BC 8
				Min M_T	-1.93	1.00	-7.13	⊳ -1.84	7.87	1.93	BC 21
				Max M_y	-4.13	0.78	-7.08	-1.28	⊳ 8.41	-0.57	BC 15
				Min M_y	4.86	-0.38	20.17	3.00	⊳ -27.09	3.53	BC 8
				Max M_z	4.40	0.14	17.53	2.18	-23.84	⊳ 4.56	BC 11
				Min M_z	-4.38	0.04	-6.74	-0.67	7.99	⊳ -2.11	BC 14
			0.583	Max N	⊳ 5.00	0.00	20.00	2.69	-26.87	4.32	BC 9
			Rechts	Min N	⊳ -4.38	0.04	-6.74	-0.67	7.99	-2.11	BC 14
				Max V_y	1.83	⊳ 1.26	5.18	0.61	-10.46	1.57	BC 19
				Min V_y	-1.92	⊳ -1.19	1.15	0.23	2.95	-0.67	BC 22
				Max V_z	4.86	-0.38	⊳ 20.17	3.00	-27.09	3.53	BC 8
				Min V_z	-1.93	1.00	⊳ -7.13	-1.84	7.87	1.93	BC 21
				Max M_T	4.86	-0.38	20.17	⊳ 3.00	-27.09	3.53	BC 8
				Min M_T	-1.93	1.00	-7.13	⊳ -1.84	7.87	1.93	BC 21
				Max M_y	-4.13	0.78	-7.08	-1.28	⊳ 8.41	-0.57	BC 15
				Min M_y	4.86	-0.38	20.17	3.00	⊳ -27.09	3.53	BC 8
				Max M_z	4.40	0.14	17.53	2.18	-23.84	⊳ 4.56	BC 11
				Min M_z	-4.38	0.04	-6.74	-0.67	7.99	⊳ -2.11	BC 14
			0.645	Max N	⊳ 5.04	-0.05	19.85	2.69	-25.63	4.32	BC 9
			Links	Min N	⊳ -4.37	0.03	-6.70	-0.67	7.57	-2.12	BC 14
				Max V_y	1.83	⊳ 1.24	5.14	0.61	-10.14	1.50	BC 19
				Min V_y	-1.91	⊳ -1.20	1.12	0.23	3.02	-0.60	BC 22
				Max V_z	4.90	-0.43	⊳ 20.02	3.00	-25.84	3.56	BC 8
				Min V_z	-1.93	0.98	⊳ -7.09	-1.85	7.43	1.87	BC 21
				Max M_T	4.90	-0.43	20.02	⊳ 3.00	-25.84	3.56	BC 8
				Min M_T	-1.93	0.98	-7.09	⊳ -1.85	7.43	1.87	BC 21
				Max M_y	-4.12	0.77	-7.04	-1.28	⊳ 7.97	-0.62	BC 15
				Min M_y	4.90	-0.43	20.02	3.00	⊳ -25.84	3.56	BC 8
				Max M_z	4.44	0.08	17.40	2.18	-22.75	⊳ 4.55	BC 11
				Min M_z	-4.37	0.03	-6.70	-0.67	7.57	⊳ -2.12	BC 14
			0.645	Max N	⊳ 5.04	-0.05	19.85	2.69	-25.63	4.32	BC 9
			Rechts	Min N	⊳ -4.37	0.03	-6.70	-0.67	7.57	-2.12	BC 14
				Max V_y	1.83	⊳ 1.24	5.14	0.61	-10.14	1.50	BC 19
				Min V_y	-1.91	⊳ -1.20	1.12	0.23	3.02	-0.60	BC 22
				Max V_z	4.90	-0.43	⊳ 20.02	3.00	-25.84	3.56	BC 8
				Min V_z	-1.93	0.98	⊳ -7.09	-1.85	7.43	1.87	BC 21
				Max M_T	4.90	-0.43	20.02	⊳ 3.00	-25.84	3.56	BC 8
				Min M_T	-1.93	0.98	-7.09	⊳ -1.85	7.43	1.87	BC 21
				Max M_y	-4.12	0.77	-7.04	-1.28	⊳ 7.97	-0.62	BC 15
				Min M_y	4.90	-0.43	20.02	3.00	⊳ -25.84	3.56	BC 8
				Max M_z	4.44	0.08	17.40	2.18	-22.75	⊳ 4.55	BC 11
				Min M_z	-4.37	0.03	-6.70	-0.67	7.57	⊳ -2.12	BC 14
			1.290	Max N	⊳ 5.29	-0.38	18.94	2.69	-13.20	4.50	BC 9
			Links	Min N	⊳ -4.31	-0.05	-6.62	-0.67	3.30	-2.11	BC 14

4.12 DOORSNEDES - SNEDEKRACHTEN

Resultaatcombinaties

Staaf No.	RC	Knoop No.	Snede x [m]		Krachten [kN] N	V_y	V_z	Momenten [kNm] M_T	M_y	M_z	Bijbehorend Belastingsgeval
43	RC1			Max V_y	1.92	▷ 1.10	4.80	0.61	-6.94	0.74	BC 19
				Min V_y	-1.85	▷ -1.28	0.89	0.24	3.67	0.20	BC 22
				Max V_z	5.15	-0.76	▷ 19.11	3.00	-13.29	3.98	BC 8
				Min V_z	-1.87	0.89	▷ -7.01	-1.85	2.91	1.27	BC 21
				Max M_T	5.15	-0.76	19.11	▷ 3.00	-13.29	3.98	BC 8
				Min M_T	-1.87	0.89	-7.01	▷ -1.85	2.91	1.27	BC 21
				Max M_y	-1.61	-0.55	0.55	-0.36	▷ 3.86	1.24	BC 23
				Min M_y	4.50	-0.45	17.24	2.76	▷ -13.40	3.41	BC 12
				Max M_z	4.68	-0.25	16.57	2.18	-11.86	▷ 4.65	BC 11
				Min M_z	-4.31	-0.05	-6.62	-0.67	3.30	▷ -2.11	BC 14
		68	1.290	Max N	▷ 5.29	-0.38	18.94	2.69	-13.20	4.50	BC 9
			Rechts	Min N	▷ -4.31	-0.05	-6.62	-0.67	3.30	-2.11	BC 14
				Max V_y	1.92	▷ 1.10	4.80	0.61	-6.94	0.74	BC 19
				Min V_y	-1.85	▷ -1.28	0.89	0.24	3.67	0.20	BC 22
				Max V_z	5.15	-0.76	▷ 19.11	3.00	-13.29	3.98	BC 8
				Min V_z	-1.87	0.89	▷ -7.01	-1.85	2.91	1.27	BC 21
				Max M_T	5.15	-0.76	19.11	▷ 3.00	-13.29	3.98	BC 8
				Min M_T	-1.87	0.89	-7.01	▷ -1.85	2.91	1.27	BC 21
				Max M_y	-1.61	-0.55	0.55	-0.36	▷ 3.86	1.24	BC 23
				Min M_y	4.50	-0.45	17.24	2.76	▷ -13.40	3.41	BC 12
				Max M_z	4.68	-0.25	16.57	2.18	-11.86	▷ 4.65	BC 11
				Min M_z	-4.31	-0.05	-6.62	-0.67	3.30	▷ -2.11	BC 14
44	RC1	35	0.000	Max N	▷ 10.59	8.61	-10.15	2.43	16.80	11.36	BC 8
			Links	Min N	▷ -5.34	-2.84	3.39	-0.92	-5.60	-4.06	BC 15
				Max V_y	10.59	▷ 8.61	-10.15	2.43	16.80	11.36	BC 8
				Min V_y	-5.34	▷ -2.84	3.39	-0.92	-5.60	-4.06	BC 15
				Max V_z	-2.16	-0.94	▷ 3.66	-0.48	-6.23	-1.92	BC 20
				Min V_z	10.30	8.40	▷ -10.25	2.06	16.88	10.79	BC 9
				Max M_T	9.52	8.12	-8.31	▷ 2.57	13.09	10.72	BC 12
				Min M_T	-1.04	-0.80	-3.96	▷ -1.43	9.40	-1.42	BC 23
				Max M_y	10.30	8.40	-10.25	2.06	▷ 16.88	10.79	BC 9
				Min M_y	-2.16	-0.94	3.66	-0.48	▷ -6.23	-1.92	BC 20
				Max M_z	10.59	8.61	-10.15	2.43	16.80	▷ 11.36	BC 8
				Min M_z	-5.34	-2.84	3.39	-0.92	-5.60	▷ -4.06	BC 15
			0.000	Max N	▷ 10.59	8.61	-10.15	2.43	16.80	11.36	BC 8
			Rechts	Min N	▷ -5.34	-2.84	3.39	-0.92	-5.60	-4.06	BC 15
				Max V_y	10.59	▷ 8.61	-10.15	2.43	16.80	11.36	BC 8
				Min V_y	-5.34	▷ -2.84	3.39	-0.92	-5.60	-4.06	BC 15
				Max V_z	-2.16	-0.94	▷ 3.66	-0.48	-6.23	-1.92	BC 20
				Min V_z	10.30	8.40	▷ -10.25	2.06	16.88	10.79	BC 9
				Max M_T	9.52	8.12	-8.31	▷ 2.57	13.09	10.72	BC 12
				Min M_T	-1.04	-0.80	-3.96	▷ -1.43	9.40	-1.42	BC 23
				Max M_y	10.30	8.40	-10.25	2.06	▷ 16.88	10.79	BC 9
				Min M_y	-2.16	-0.94	3.66	-0.48	▷ -6.23	-1.92	BC 20
				Max M_z	10.59	8.61	-10.15	2.43	16.80	▷ 11.36	BC 8
				Min M_z	-5.34	-2.84	3.39	-0.92	-5.60	▷ -4.06	BC 15
			0.583	Max N	▷ 10.90	8.44	-9.39	2.44	11.06	6.38	BC 8
			Links	Min N	▷ -5.25	-2.88	3.29	-0.92	-3.63	-2.39	BC 15
				Max V_y	10.90	▷ 8.44	-9.39	2.44	11.06	6.38	BC 8
				Min V_y	-5.25	▷ -2.88	3.29	-0.92	-3.63	-2.39	BC 15
				Max V_z	-2.08	-0.99	▷ 3.56	-0.48	-4.10	-1.36	BC 20
				Min V_z	10.61	8.23	▷ -9.49	2.07	11.09	5.94	BC 9
				Max M_T	9.82	7.95	-7.63	▷ 2.58	8.40	6.04	BC 12
				Min M_T	-0.95	-0.84	-3.75	▷ -1.42	7.15	-0.95	BC 23
				Max M_y	10.61	8.23	-9.49	2.07	▷ 11.09	5.94	BC 9
				Min M_y	-2.08	-0.99	3.56	-0.48	▷ -4.10	-1.36	BC 20
				Max M_z	10.90	8.44	-9.39	2.44	11.06	▷ 6.38	BC 8
				Min M_z	-5.25	-2.88	3.29	-0.92	-3.63	▷ -2.39	BC 15
			0.583	Max N	▷ 10.90	8.44	-9.39	2.44	11.06	6.38	BC 8
			Rechts	Min N	▷ -5.25	-2.88	3.29	-0.92	-3.63	-2.39	BC 15
				Max V_y	10.90	▷ 8.44	-9.39	2.44	11.06	6.38	BC 8
				Min V_y	-5.25	▷ -2.88	3.29	-0.92	-3.63	-2.39	BC 15
				Max V_z	-2.08	-0.99	▷ 3.56	-0.48	-4.10	-1.36	BC 20
				Min V_z	10.61	8.23	▷ -9.49	2.07	11.09	5.94	BC 9
				Max M_T	9.82	7.95	-7.63	▷ 2.58	8.40	6.04	BC 12
				Min M_T	-0.95	-0.84	-3.75	▷ -1.42	7.15	-0.95	BC 23
				Max M_y	10.61	8.23	-9.49	2.07	▷ 11.09	5.94	BC 9
				Min M_y	-2.08	-0.99	3.56	-0.48	▷ -4.10	-1.36	BC 20
				Max M_z	10.90	8.44	-9.39	2.44	11.06	▷ 6.38	BC 8
				Min M_z	-5.25	-2.88	3.29	-0.92	-3.63	▷ -2.39	BC 15
			0.679	Max N	▷ 10.98	8.39	-9.18	2.45	10.16	5.57	BC 8
			Links	Min N	▷ -5.23	-2.88	3.23	-0.92	-3.31	-2.11	BC 15
				Max V_y	10.98	▷ 8.39	-9.18	2.45	10.16	5.57	BC 8
				Min V_y	-5.23	▷ -2.88	3.23	-0.92	-3.31	-2.11	BC 15
				Max V_z	-2.06	-1.00	▷ 3.50	-0.48	-3.76	-1.26	BC 20
				Min V_z	10.69	8.19	▷ -9.28	2.08	10.18	5.15	BC 9
				Max M_T	9.90	7.90	-7.45	▷ 2.58	7.67	5.28	BC 12
				Min M_T	-0.93	-0.84	-3.70	▷ -1.42	6.79	-0.87	BC 23
				Max M_y	10.69	8.19	-9.28	2.08	▷ 10.18	5.15	BC 9
				Min M_y	-2.06	-1.00	3.50	-0.48	▷ -3.76	-1.26	BC 20
				Max M_z	10.98	8.39	-9.18	2.45	10.16	▷ 5.57	BC 8
				Min M_z	-5.23	-2.88	3.23	-0.92	-3.31	▷ -2.11	BC 15
			0.679	Max N	▷ 10.98	8.39	-9.18	2.45	10.16	5.57	BC 8
			Rechts	Min N	▷ -5.23	-2.88	3.23	-0.92	-3.31	-2.11	BC 15

4.12 DOORSNEDES - SNEDEKRACHTEN

Resultaatcombinaties

Staaf No.	RC	Knoop No.	Snede x [m]		Krachten [kN] N	V_y	V_z	Momenten [kNm] M_T	M_y	M_z	Bijbehorend Belastingsgeval
44	RC1			Max V_y	10.98	▷ 8.39	-9.18	2.45	10.16	5.57	BC 8
				Min V_y	-5.23	▷ -2.88	3.23	-0.92	-3.31	-2.11	BC 15
				Max V_z	-2.06	-1.00	▷ 3.50	-0.48	-3.76	-1.26	BC 20
				Min V_z	10.69	8.19	▷ -9.28	2.08	10.18	5.15	BC 9
				Max M_T	9.90	7.90	-7.45	▷ 2.58	7.67	5.28	BC 12
				Min M_T	-0.93	-0.84	-3.70	▷ -1.42	6.79	-0.87	BC 23
				Max M_y	10.69	8.19	-9.28	2.08	▷ 10.18	5.15	BC 9
				Min M_y	-2.06	-1.00	3.50	-0.48	▷ -3.76	-1.26	BC 20
				Max M_z	10.98	8.39	-9.18	2.45	10.16	▷ 5.57	BC 8
				Min M_z	-5.23	-2.88	3.23	-0.92	-3.31	▷ -2.11	BC 15
			2.552	Max N	▷ 12.49	7.56	-5.10	2.48	-3.18	-9.35	BC 8
			Links	Min N	▷ -4.89	-2.99	2.04	-0.92	1.63	3.39	BC 15
				Max V_y	12.49	▷ 7.56	-5.10	2.48	-3.18	-9.35	BC 8
				Min V_y	-4.89	▷ -2.99	2.04	-0.92	1.63	3.39	BC 15
				Max V_z	-1.80	-1.20	▷ 2.33	-0.48	1.70	0.80	BC 20
				Min V_z	12.24	7.41	▷ -5.20	2.11	-3.34	-9.43	BC 9
				Max M_T	11.41	7.06	-3.87	▷ 2.59	-2.89	-8.71	BC 12
				Min M_T	-0.58	-0.93	-2.89	▷ -1.40	0.61	0.80	BC 23
				Max M_y	-4.40	-2.69	2.24	-0.19	▷ 1.93	3.57	BC 14
				Min M_y	12.24	7.41	-5.20	2.11	▷ -3.34	-9.43	BC 9
				Max M_z	-4.40	-2.69	2.24	-0.19	1.93	▷ 3.57	BC 14
				Min M_z	12.24	7.41	-5.20	2.11	-3.34	▷ -9.43	BC 9
			2.552	Max N	▷ 12.49	7.56	-5.10	2.48	-3.18	-9.35	BC 8
			Rechts	Min N	▷ -4.89	-2.99	2.04	-0.92	1.63	3.39	BC 15
				Max V_y	12.49	▷ 7.56	-5.10	2.48	-3.18	-9.35	BC 8
				Min V_y	-4.89	▷ -2.99	2.04	-0.92	1.63	3.39	BC 15
				Max V_z	-1.80	-1.20	▷ 2.33	-0.48	1.70	0.80	BC 20
				Min V_z	12.24	7.41	▷ -5.20	2.11	-3.34	-9.43	BC 9
				Max M_T	11.41	7.06	-3.87	▷ 2.59	-2.89	-8.71	BC 12
				Min M_T	-0.58	-0.93	-2.89	▷ -1.40	0.61	0.80	BC 23
				Max M_y	-4.40	-2.69	2.24	-0.19	▷ 1.93	3.57	BC 14
				Min M_y	12.24	7.41	-5.20	2.11	▷ -3.34	-9.43	BC 9
				Max M_z	-4.40	-2.69	2.24	-0.19	1.93	▷ 3.57	BC 14
				Min M_z	12.24	7.41	-5.20	2.11	-3.34	▷ -9.43	BC 9
			2.581	Max N	▷ 12.51	7.55	-5.04	2.48	-3.32	-9.56	BC 8
			Links	Min N	▷ -4.88	-2.99	2.03	-0.92	1.69	3.47	BC 15
				Max V_y	12.51	▷ 7.55	-5.04	2.48	-3.32	-9.56	BC 8
				Min V_y	-4.88	▷ -2.99	2.03	-0.92	1.69	3.47	BC 15
				Max V_z	-1.79	-1.20	▷ 2.31	-0.48	1.77	0.83	BC 20
				Min V_z	12.26	7.39	▷ -5.14	2.11	-3.48	-9.64	BC 9
				Max M_T	11.43	7.05	-3.82	▷ 2.59	-3.00	-8.91	BC 12
				Min M_T	-0.58	-0.94	-2.88	▷ -1.40	0.53	0.82	BC 23
				Max M_y	-4.39	-2.69	2.22	-0.19	▷ 2.00	3.64	BC 14
				Min M_y	12.26	7.39	-5.14	2.11	▷ -3.48	-9.64	BC 9
				Max M_z	-4.39	-2.69	2.22	-0.19	2.00	▷ 3.64	BC 14
				Min M_z	12.26	7.39	-5.14	2.11	-3.48	▷ -9.64	BC 9
			2.581	Max N	▷ 12.51	7.55	-5.04	2.48	-3.32	-9.56	BC 8
			Rechts	Min N	▷ -4.88	-2.99	2.03	-0.92	1.69	3.47	BC 15
				Max V_y	12.51	▷ 7.55	-5.04	2.48	-3.32	-9.56	BC 8
				Min V_y	-4.88	▷ -2.99	2.03	-0.92	1.69	3.47	BC 15
				Max V_z	-1.79	-1.20	▷ 2.31	-0.48	1.77	0.83	BC 20
				Min V_z	12.26	7.39	▷ -5.14	2.11	-3.48	-9.64	BC 9
				Max M_T	11.43	7.05	-3.82	▷ 2.59	-3.00	-8.91	BC 12
				Min M_T	-0.58	-0.94	-2.88	▷ -1.40	0.53	0.82	BC 23
				Max M_y	-4.39	-2.69	2.22	-0.19	▷ 2.00	3.64	BC 14
				Min M_y	12.26	7.39	-5.14	2.11	▷ -3.48	-9.64	BC 9
				Max M_z	-4.39	-2.69	2.22	-0.19	2.00	▷ 3.64	BC 14
				Min M_z	12.26	7.39	-5.14	2.11	-3.48	▷ -9.64	BC 9
			3.260	Max N	▷ 12.80	7.40	-4.23	2.49	-6.40	-14.62	BC 8
			Links	Min N	▷ -4.78	-3.03	1.92	-0.92	2.99	5.51	BC 15
				Max V_y	12.80	▷ 7.40	-4.23	2.49	-6.40	-14.62	BC 8
				Min V_y	-4.78	▷ -3.03	1.92	-0.92	2.99	5.51	BC 15
				Max V_z	-1.70	-1.26	▷ 2.21	-0.48	3.27	1.67	BC 20
				Min V_z	12.56	7.26	▷ -4.33	2.13	-6.63	-14.60	BC 9
				Max M_T	11.72	6.90	-3.09	▷ 2.60	-5.29	-13.63	BC 12
				Min M_T	-0.47	-0.97	-2.63	▷ -1.39	-1.33	1.48	BC 23
				Max M_y	-4.30	-2.75	2.12	-0.19	▷ 3.44	5.49	BC 14
				Min M_y	12.56	7.26	-4.33	2.13	▷ -6.63	-14.60	BC 9
				Max M_z	-4.78	-3.03	1.92	-0.92	2.99	▷ 5.51	BC 15
				Min M_z	12.80	7.40	-4.23	2.49	-6.40	▷ -14.62	BC 8
		42	3.260	Max N	▷ 12.80	7.40	-4.23	2.49	-6.40	-14.62	BC 8
			Rechts	Min N	▷ -4.78	-3.03	1.92	-0.92	2.99	5.51	BC 15
				Max V_y	12.80	▷ 7.40	-4.23	2.49	-6.40	-14.62	BC 8
				Min V_y	-4.78	▷ -3.03	1.92	-0.92	2.99	5.51	BC 15
				Max V_z	-1.70	-1.26	▷ 2.21	-0.48	3.27	1.67	BC 20
				Min V_z	12.56	7.26	▷ -4.33	2.13	-6.63	-14.60	BC 9
				Max M_T	11.72	6.90	-3.09	▷ 2.60	-5.29	-13.63	BC 12
				Min M_T	-0.47	-0.97	-2.63	▷ -1.39	-1.33	1.48	BC 23
				Max M_y	-4.30	-2.75	2.12	-0.19	▷ 3.44	5.49	BC 14
				Min M_y	12.56	7.26	-4.33	2.13	▷ -6.63	-14.60	BC 9
				Max M_z	-4.78	-3.03	1.92	-0.92	2.99	▷ 5.51	BC 15
				Min M_z	12.80	7.40	-4.23	2.49	-6.40	▷ -14.62	BC 8
45	RC1	46	0.000	Max N	▷ 4.62	-0.10	-20.97	-3.00	39.13	3.41	BC 8
			Links	Min N	▷ -4.77	1.07	7.08	1.14	-12.63	-0.05	BC 15

4.12 DOORSNEDES - SNEDEKRACHTEN

Resultaatcombinaties

Staaf No.	RC	Knoop No.	Snede x [m]		Krachten [kN] N	V_y	V_z	Momenten [kNm] M_T	M_y	M_z	Bijbehorend Belastingsgeval
45	RC1			Max V_y	-2.63	▷ 2.00	5.11	0.58	-3.73	0.62	BC 23
				Min V_y	3.39	▷ -0.82	-17.16	-2.56	29.60	1.59	BC 6
				Max V_z	-2.58	1.27	▷ 7.13	1.71	-12.12	2.57	BC 21
				Min V_z	4.62	-0.10	▷ -20.97	-3.00	39.13	3.41	BC 8
				Max M_T	-2.58	1.27	7.13	▷ 1.71	-12.12	2.57	BC 21
				Min M_T	4.62	-0.10	-20.97	▷ -3.00	39.13	3.41	BC 8
				Max M_y	4.62	-0.10	-20.97	-3.00	▷ 39.13	3.41	BC 8
				Min M_y	-4.77	1.07	7.08	1.14	▷ -12.63	-0.05	BC 15
				Max M_z	3.85	0.52	-18.29	-2.25	34.29	▷ 4.76	BC 11
				Min M_z	-4.44	0.12	6.84	0.67	-11.97	▷ -2.07	BC 14
			0.000	Max N	▷ 4.62	-0.10	-20.97	-3.00	39.13	3.41	BC 8
			Rechts	Min N	▷ -4.77	1.07	7.08	1.14	-12.63	-0.05	BC 15
				Max V_y	-2.63	▷ 2.00	5.11	0.58	-3.73	0.62	BC 23
				Min V_y	3.39	▷ -0.82	-17.16	-2.56	29.60	1.59	BC 6
				Max V_z	-2.58	1.27	▷ 7.13	1.71	-12.12	2.57	BC 21
				Min V_z	4.62	-0.10	▷ -20.97	-3.00	39.13	3.41	BC 8
				Max M_T	-2.58	1.27	7.13	▷ 1.71	-12.12	2.57	BC 21
				Min M_T	4.62	-0.10	-20.97	▷ -3.00	39.13	3.41	BC 8
				Max M_y	4.62	-0.10	-20.97	-3.00	▷ 39.13	3.41	BC 8
				Min M_y	-4.77	1.07	7.08	1.14	▷ -12.63	-0.05	BC 15
				Max M_z	3.85	0.52	-18.29	-2.25	34.29	▷ 4.76	BC 11
				Min M_z	-4.44	0.12	6.84	0.67	-11.97	▷ -2.07	BC 14
			0.583	Max N	▷ 4.86	-0.38	-20.17	-3.00	27.09	3.53	BC 8
			Links	Min N	▷ -4.70	0.98	6.98	1.13	-8.51	-0.65	BC 15
				Max V_y	-2.56	▷ 1.92	5.01	0.56	-0.75	-0.52	BC 23
				Min V_y	3.57	▷ -1.03	-16.45	-2.57	19.76	2.12	BC 6
				Max V_z	-2.50	1.19	▷ 7.03	1.71	-7.97	1.85	BC 21
				Min V_z	4.86	-0.38	▷ -20.17	-3.00	27.09	3.53	BC 8
				Max M_T	-2.50	1.19	7.03	▷ 1.71	-7.97	1.85	BC 21
				Min M_T	4.86	-0.38	-20.17	▷ -3.00	27.09	3.53	BC 8
				Max M_y	4.86	-0.38	-20.17	-3.00	▷ 27.09	3.53	BC 8
				Min M_y	-4.70	0.98	6.98	1.13	▷ -8.51	-0.65	BC 15
				Max M_z	4.09	0.23	-17.58	-2.25	23.79	▷ 4.52	BC 11
				Min M_z	-4.38	0.04	6.74	0.67	-7.99	▷ -2.11	BC 14
			0.583	Max N	▷ 4.86	-0.38	-20.17	-3.00	27.09	3.53	BC 8
			Rechts	Min N	▷ -4.70	0.98	6.98	1.13	-8.51	-0.65	BC 15
				Max V_y	-2.56	▷ 1.92	5.01	0.56	-0.75	-0.52	BC 23
				Min V_y	3.57	▷ -1.03	-16.45	-2.57	19.76	2.12	BC 6
				Max V_z	-2.50	1.19	▷ 7.03	1.71	-7.97	1.85	BC 21
				Min V_z	4.86	-0.38	▷ -20.17	-3.00	27.09	3.53	BC 8
				Max M_T	-2.50	1.19	7.03	▷ 1.71	-7.97	1.85	BC 21
				Min M_T	4.86	-0.38	-20.17	▷ -3.00	27.09	3.53	BC 8
				Max M_y	4.86	-0.38	-20.17	-3.00	▷ 27.09	3.53	BC 8
				Min M_y	-4.70	0.98	6.98	1.13	▷ -8.51	-0.65	BC 15
				Max M_z	4.09	0.23	-17.58	-2.25	23.79	▷ 4.52	BC 11
				Min M_z	-4.38	0.04	6.74	0.67	-7.99	▷ -2.11	BC 14
			0.645	Max N	▷ 4.90	-0.43	-20.02	-3.00	25.84	3.56	BC 8
			Links	Min N	▷ -4.69	0.97	6.94	1.13	-8.08	-0.71	BC 15
				Max V_y	-2.55	▷ 1.91	4.97	0.56	-0.44	-0.64	BC 23
				Min V_y	3.60	▷ -1.06	-16.32	-2.58	18.74	2.18	BC 6
				Max V_z	-2.49	1.18	▷ 6.99	1.71	-7.53	1.78	BC 21
				Min V_z	4.90	-0.43	▷ -20.02	-3.00	25.84	3.56	BC 8
				Max M_T	-2.49	1.18	6.99	▷ 1.71	-7.53	1.78	BC 21
				Min M_T	4.90	-0.43	-20.02	▷ -3.00	25.84	3.56	BC 8
				Max M_y	4.90	-0.43	-20.02	-3.00	▷ 25.84	3.56	BC 8
				Min M_y	-4.69	0.97	6.94	1.13	▷ -8.08	-0.71	BC 15
				Max M_z	4.13	0.18	-17.45	-2.25	22.69	▷ 4.51	BC 11
				Min M_z	-4.37	0.03	6.70	0.67	-7.57	▷ -2.12	BC 14
			0.645	Max N	▷ 4.90	-0.43	-20.02	-3.00	25.84	3.56	BC 8
			Rechts	Min N	▷ -4.69	0.97	6.94	1.13	-8.08	-0.71	BC 15
				Max V_y	-2.55	▷ 1.91	4.97	0.56	-0.44	-0.64	BC 23
				Min V_y	3.60	▷ -1.06	-16.32	-2.58	18.74	2.18	BC 6
				Max V_z	-2.49	1.18	▷ 6.99	1.71	-7.53	1.78	BC 21
				Min V_z	4.90	-0.43	▷ -20.02	-3.00	25.84	3.56	BC 8
				Max M_T	-2.49	1.18	6.99	▷ 1.71	-7.53	1.78	BC 21
				Min M_T	4.90	-0.43	-20.02	▷ -3.00	25.84	3.56	BC 8
				Max M_y	4.90	-0.43	-20.02	-3.00	▷ 25.84	3.56	BC 8
				Min M_y	-4.69	0.97	6.94	1.13	▷ -8.08	-0.71	BC 15
				Max M_z	4.13	0.18	-17.45	-2.25	22.69	▷ 4.51	BC 11
				Min M_z	-4.37	0.03	6.70	0.67	-7.57	▷ -2.12	BC 14
			1.290	Max N	▷ 5.15	-0.76	-19.11	-3.00	13.29	3.98	BC 8
			Links	Min N	▷ -4.61	0.88	6.85	1.13	-3.66	-1.31	BC 15
				Max V_y	-2.48	▷ 1.82	4.88	0.54	2.70	-1.84	BC 23
				Min V_y	3.78	▷ -1.30	-15.52	-2.59	8.53	2.97	BC 6
				Max V_z	-2.41	1.09	▷ 6.90	1.71	-3.09	1.05	BC 21
				Min V_z	5.15	-0.76	▷ -19.11	-3.00	13.29	3.98	BC 8
				Max M_T	-2.41	1.09	6.90	▷ 1.71	-3.09	1.05	BC 21
				Min M_T	5.15	-0.76	-19.11	▷ -3.00	13.29	3.98	BC 8
				Max M_y	5.15	-0.76	-19.11	-3.00	▷ 13.29	3.98	BC 8
				Min M_y	-4.61	0.88	6.85	1.13	▷ -3.66	-1.31	BC 15
				Max M_z	4.39	-0.15	-16.62	-2.25	11.77	▷ 4.54	BC 11
				Min M_z	-2.17	0.89	4.65	0.07	3.07	▷ -2.65	BC 22
		71	1.290	Max N	▷ 5.15	-0.76	-19.11	-3.00	13.29	3.98	BC 8
			Rechts	Min N	▷ -4.61	0.88	6.85	1.13	-3.66	-1.31	BC 15

4.12 DOORSNEDES - SNEDEKRACHTEN

Resultaatcombinaties

Staaf No.	RC	Knoop No.	Snede x [m]		Krachten [kN] N	V_y	V_z	Momenten [kNm] M_T	M_y	M_z	Bijbehorend Belastingsgeval
45	RC1			Max V_y	-2.48	▷ 1.82	4.88	0.54	2.70	-1.84	BC 23
				Min V_y	3.78	▷ -1.30	-15.52	-2.59	8.53	2.97	BC 6
				Max V_z	-2.41	1.09	▷ 6.90	1.71	-3.09	1.05	BC 21
				Min V_z	5.15	-0.76	▷ -19.11	-3.00	13.29	3.98	BC 8
				Max M_T	-2.41	1.09	6.90	▷ 1.71	-3.09	1.05	BC 21
				Min M_T	5.15	-0.76	-19.11	▷ -3.00	13.29	3.98	BC 8
				Max M_y	5.15	-0.76	-19.11	-3.00	▷ 13.29	3.98	BC 8
				Min M_y	-4.61	0.88	6.85	1.13	▷ -3.66	-1.31	BC 15
				Max M_z	4.39	-0.15	-16.62	-2.25	11.77	▷ 4.54	BC 11
				Min M_z	-2.17	0.89	4.65	0.07	3.07	▷ -2.65	BC 22
46	RC1	164	0.000	Max N	▷ 10.90	9.67	10.05	-2.63	-16.45	12.05	BC 9
			Links	Min N	▷ -4.76	-2.44	-3.57	0.20	5.78	-2.97	BC 14
				Max V_y	10.90	▷ 9.67	10.05	-2.63	-16.45	12.05	BC 9
				Min V_y	-4.76	▷ -2.44	-3.57	0.20	5.78	-2.97	BC 14
				Max V_z	10.13	8.19	▷ 10.65	-2.08	-18.24	10.73	BC 12
				Min V_z	-2.32	1.17	▷ -5.76	-1.47	12.26	0.54	BC 23
				Max M_T	-2.16	-0.94	-3.66	▷ 0.48	6.23	-1.92	BC 20
				Min M_T	10.90	9.67	10.05	▷ -2.63	-16.45	12.05	BC 9
				Max M_y	-2.32	1.17	-5.76	-1.47	▷ 12.26	0.54	BC 23
				Min M_y	10.13	8.19	10.65	-2.08	▷ -18.24	10.73	BC 12
				Max M_z	10.90	9.67	10.05	-2.63	-16.45	▷ 12.05	BC 9
				Min M_z	-4.76	-2.44	-3.57	0.20	5.78	▷ -2.97	BC 14
			0.000	Max N	▷ 10.90	9.67	10.05	-2.63	-16.45	12.05	BC 9
			Rechts	Min N	▷ -4.76	-2.44	-3.57	0.20	5.78	-2.97	BC 14
				Max V_y	10.90	▷ 9.67	10.05	-2.63	-16.45	12.05	BC 9
				Min V_y	-4.76	▷ -2.44	-3.57	0.20	5.78	-2.97	BC 14
				Max V_z	10.13	8.19	▷ 10.65	-2.08	-18.24	10.73	BC 12
				Min V_z	-2.32	1.17	▷ -5.76	-1.47	12.26	0.54	BC 23
				Max M_T	-2.16	-0.94	-3.66	▷ 0.48	6.23	-1.92	BC 20
				Min M_T	10.90	9.67	10.05	▷ -2.63	-16.45	12.05	BC 9
				Max M_y	-2.32	1.17	-5.76	-1.47	▷ 12.26	0.54	BC 23
				Min M_y	10.13	8.19	10.65	-2.08	▷ -18.24	10.73	BC 12
				Max M_z	10.90	9.67	10.05	-2.63	-16.45	▷ 12.05	BC 9
				Min M_z	-4.76	-2.44	-3.57	0.20	5.78	▷ -2.97	BC 14
			0.583	Max N	▷ 11.22	9.28	9.30	-2.63	-10.77	6.52	BC 9
			Links	Min N	▷ -4.68	-2.49	-3.47	0.20	3.70	-1.54	BC 14
				Max V_y	11.22	▷ 9.28	9.30	-2.63	-10.77	6.52	BC 9
				Min V_y	-4.68	▷ -2.49	-3.47	0.20	3.70	-1.54	BC 14
				Max V_z	10.44	8.02	▷ 9.89	-2.09	-12.21	6.00	BC 12
				Min V_z	-2.22	0.71	▷ -5.65	-1.48	8.92	-0.02	BC 23
				Max M_T	-2.08	-0.99	-3.56	▷ 0.48	4.10	-1.36	BC 20
				Min M_T	11.22	9.28	9.30	▷ -2.63	-10.77	6.52	BC 9
				Max M_y	-2.22	0.71	-5.65	-1.48	▷ 8.92	-0.02	BC 23
				Min M_y	8.62	6.19	9.34	-1.51	▷ -12.55	4.93	BC 6
				Max M_z	11.22	9.28	9.30	-2.63	-10.77	▷ 6.52	BC 9
				Min M_z	-4.68	-2.49	-3.47	0.20	3.70	▷ -1.54	BC 14
			0.583	Max N	▷ 11.22	9.28	9.30	-2.63	-10.77	6.52	BC 9
			Rechts	Min N	▷ -4.68	-2.49	-3.47	0.20	3.70	-1.54	BC 14
				Max V_y	11.22	▷ 9.28	9.30	-2.63	-10.77	6.52	BC 9
				Min V_y	-4.68	▷ -2.49	-3.47	0.20	3.70	-1.54	BC 14
				Max V_z	10.44	8.02	▷ 9.89	-2.09	-12.21	6.00	BC 12
				Min V_z	-2.22	0.71	▷ -5.65	-1.48	8.92	-0.02	BC 23
				Max M_T	-2.08	-0.99	-3.56	▷ 0.48	4.10	-1.36	BC 20
				Min M_T	11.22	9.28	9.30	▷ -2.63	-10.77	6.52	BC 9
				Max M_y	-2.22	0.71	-5.65	-1.48	▷ 8.92	-0.02	BC 23
				Min M_y	8.62	6.19	9.34	-1.51	▷ -12.55	4.93	BC 6
				Max M_z	11.22	9.28	9.30	-2.63	-10.77	▷ 6.52	BC 9
				Min M_z	-4.68	-2.49	-3.47	0.20	3.70	▷ -1.54	BC 14
			0.679	Max N	▷ 11.30	9.20	9.09	-2.64	-9.88	5.63	BC 9
			Links	Min N	▷ -4.66	-2.50	-3.41	0.20	3.36	-1.30	BC 14
				Max V_y	11.30	▷ 9.20	9.09	-2.64	-9.88	5.63	BC 9
				Min V_y	-4.66	▷ -2.50	-3.41	0.20	3.36	-1.30	BC 14
				Max V_z	10.52	7.97	▷ 9.68	-2.09	-11.26	5.23	BC 12
				Min V_z	-2.21	0.62	▷ -5.59	-1.48	8.38	-0.08	BC 23
				Max M_T	-2.06	-1.00	-3.50	▷ 0.48	3.76	-1.26	BC 20
				Min M_T	11.30	9.20	9.09	▷ -2.64	-9.88	5.63	BC 9
				Max M_y	-2.21	0.62	-5.59	-1.48	▷ 8.38	-0.08	BC 23
				Min M_y	8.68	6.15	9.15	-1.51	▷ -11.66	4.33	BC 6
				Max M_z	11.30	9.20	9.09	-2.64	-9.88	▷ 5.63	BC 9
				Min M_z	-4.66	-2.50	-3.41	0.20	3.36	▷ -1.30	BC 14
			0.679	Max N	▷ 11.30	9.20	9.09	-2.64	-9.88	5.63	BC 9
			Rechts	Min N	▷ -4.66	-2.50	-3.41	0.20	3.36	-1.30	BC 14
				Max V_y	11.30	▷ 9.20	9.09	-2.64	-9.88	5.63	BC 9
				Min V_y	-4.66	▷ -2.50	-3.41	0.20	3.36	-1.30	BC 14
				Max V_z	10.52	7.97	▷ 9.68	-2.09	-11.26	5.23	BC 12
				Min V_z	-2.21	0.62	▷ -5.59	-1.48	8.38	-0.08	BC 23
				Max M_T	-2.06	-1.00	-3.50	▷ 0.48	3.76	-1.26	BC 20
				Min M_T	11.30	9.20	9.09	▷ -2.64	-9.88	5.63	BC 9
				Max M_y	-2.21	0.62	-5.59	-1.48	▷ 8.38	-0.08	BC 23
				Min M_y	8.68	6.15	9.15	-1.51	▷ -11.66	4.33	BC 6
				Max M_z	11.30	9.20	9.09	-2.64	-9.88	▷ 5.63	BC 9
				Min M_z	-4.66	-2.50	-3.41	0.20	3.36	▷ -1.30	BC 14
			2.552	Max N	▷ 12.84	7.67	5.03	-2.66	3.31	-10.15	BC 9
			Links	Min N	▷ -4.40	-2.69	-2.24	0.19	-1.93	3.57	BC 14

4.12 DOORSNEDES - SNEDEKRACHTEN

Resultaatcombinaties

Staaf No.	RC	Knoop No.	Snede x [m]		Krachten [kN] N	V_y	V_z	Momenten [kNm] M_T	M_y	M_z	Bijbehorend Belastingsgeval
46	RC1			Max V_y	12.84	▷ 7.67	5.03	-2.66	3.31	-10.15	BC 9
				Min V_y	-4.40	▷ -2.69	-2.24	0.19	-1.93	3.57	BC 14
				Max V_z	12.02	7.15	▷ 5.60	-2.14	3.01	-8.91	BC 12
				Min V_z	-1.86	-0.95	▷ -4.35	-1.52	-0.93	0.23	BC 23
				Max M_T	-1.80	-1.20	-2.33	▷ 0.48	-1.70	0.80	BC 20
				Min M_T	12.84	7.67	5.03	▷ -2.66	3.31	-10.15	BC 9
				Max M_y	12.84	7.67	5.03	-2.66	▷ 3.31	-10.15	BC 9
				Min M_y	-4.40	-2.69	-2.24	0.19	▷ -1.93	3.57	BC 14
				Max M_z	-4.40	-2.69	-2.24	0.19	-1.93	▷ 3.57	BC 14
				Min M_z	12.84	7.67	5.03	-2.66	3.31	▷ -10.15	BC 9
			2.552	Max N	▷ 12.84	7.67	5.03	-2.66	3.31	-10.15	BC 9
			Rechts	Min N	▷ -4.40	-2.69	-2.24	0.19	-1.93	3.57	BC 14
				Max V_y	12.84	▷ 7.67	5.03	-2.66	3.31	-10.15	BC 9
				Min V_y	-4.40	▷ -2.69	-2.24	0.19	-1.93	3.57	BC 14
				Max V_z	12.02	7.15	▷ 5.60	-2.14	3.01	-8.91	BC 12
				Min V_z	-1.86	-0.95	▷ -4.35	-1.52	-0.93	0.23	BC 23
				Max M_T	-1.80	-1.20	-2.33	▷ 0.48	-1.70	0.80	BC 20
				Min M_T	12.84	7.67	5.03	▷ -2.66	3.31	-10.15	BC 9
				Max M_y	12.84	7.67	5.03	-2.66	▷ 3.31	-10.15	BC 9
				Min M_y	-4.40	-2.69	-2.24	0.19	▷ -1.93	3.57	BC 14
				Max M_z	-4.40	-2.69	-2.24	0.19	-1.93	▷ 3.57	BC 14
				Min M_z	12.84	7.67	5.03	-2.66	3.31	▷ -10.15	BC 9
			2.581	Max N	▷ 12.86	7.65	4.97	-2.66	3.45	-10.36	BC 9
			Links	Min N	▷ -4.39	-2.69	-2.22	0.19	-2.00	3.64	BC 14
				Max V_y	12.86	▷ 7.65	4.97	-2.66	3.45	-10.36	BC 9
				Min V_y	-4.39	▷ -2.69	-2.22	0.19	-2.00	3.64	BC 14
				Max V_z	12.05	7.14	▷ 5.54	-2.14	3.17	-9.11	BC 12
				Min V_z	-1.86	-0.98	▷ -4.33	-1.52	-1.06	0.26	BC 23
				Max M_T	-1.79	-1.20	-2.31	▷ 0.48	-1.77	0.83	BC 20
				Min M_T	12.86	7.65	4.97	▷ -2.66	3.45	-10.36	BC 9
				Max M_y	12.86	7.65	4.97	-2.66	▷ 3.45	-10.36	BC 9
				Min M_y	-4.39	-2.69	-2.22	0.19	▷ -2.00	3.64	BC 14
				Max M_z	-4.39	-2.69	-2.22	0.19	-2.00	▷ 3.64	BC 14
				Min M_z	12.86	7.65	4.97	-2.66	3.45	▷ -10.36	BC 9
			2.581	Max N	▷ 12.86	7.65	4.97	-2.66	3.45	-10.36	BC 9
			Rechts	Min N	▷ -4.39	-2.69	-2.22	0.19	-2.00	3.64	BC 14
				Max V_y	12.86	▷ 7.65	4.97	-2.66	3.45	-10.36	BC 9
				Min V_y	-4.39	▷ -2.69	-2.22	0.19	-2.00	3.64	BC 14
				Max V_z	12.05	7.14	▷ 5.54	-2.14	3.17	-9.11	BC 12
				Min V_z	-1.86	-0.98	▷ -4.33	-1.52	-1.06	0.26	BC 23
				Max M_T	-1.79	-1.20	-2.31	▷ 0.48	-1.77	0.83	BC 20
				Min M_T	12.86	7.65	4.97	▷ -2.66	3.45	-10.36	BC 9
				Max M_y	12.86	7.65	4.97	-2.66	▷ 3.45	-10.36	BC 9
				Min M_y	-4.39	-2.69	-2.22	0.19	▷ -2.00	3.64	BC 14
				Max M_z	-4.39	-2.69	-2.22	0.19	-2.00	▷ 3.64	BC 14
				Min M_z	12.86	7.65	4.97	-2.66	3.45	▷ -10.36	BC 9
			3.260	Max N	▷ 13.16	7.26	4.17	-2.67	6.48	-15.41	BC 9
			Links	Min N	▷ -4.30	-2.75	-2.12	0.19	-3.44	5.49	BC 14
				Max V_y	12.80	▷ 7.40	4.23	-2.49	6.40	-14.62	BC 8
				Min V_y	-3.59	▷ -3.07	-2.24	-0.17	-3.25	3.95	BC 15
				Max V_z	12.34	6.99	▷ 4.72	-2.15	6.58	-13.89	BC 12
				Min V_z	-1.76	-1.52	▷ -4.22	-1.53	-3.93	1.11	BC 23
				Max M_T	-1.70	-1.26	-2.21	▷ 0.48	-3.27	1.67	BC 20
				Min M_T	13.16	7.26	4.17	▷ -2.67	6.48	-15.41	BC 9
				Max M_y	12.70	6.85	4.66	-2.34	▷ 6.66	-14.68	BC 13
				Min M_y	-2.46	-1.19	-4.10	-1.18	▷ -4.10	2.65	BC 22
				Max M_z	-4.30	-2.75	-2.12	0.19	-3.44	▷ 5.49	BC 14
				Min M_z	13.16	7.26	4.17	-2.67	6.48	▷ -15.41	BC 9
		47	3.260	Max N	▷ 13.16	7.26	4.17	-2.67	6.48	-15.41	BC 9
			Rechts	Min N	▷ -4.30	-2.75	-2.12	0.19	-3.44	5.49	BC 14
				Max V_y	12.80	▷ 7.40	4.23	-2.49	6.40	-14.62	BC 8
				Min V_y	-3.59	▷ -3.07	-2.24	-0.17	-3.25	3.95	BC 15
				Max V_z	12.34	6.99	▷ 4.72	-2.15	6.58	-13.89	BC 12
				Min V_z	-1.76	-1.52	▷ -4.22	-1.53	-3.93	1.11	BC 23
				Max M_T	-1.70	-1.26	-2.21	▷ 0.48	-3.27	1.67	BC 20
				Min M_T	13.16	7.26	4.17	▷ -2.67	6.48	-15.41	BC 9
				Max M_y	12.70	6.85	4.66	-2.34	▷ 6.66	-14.68	BC 13
				Min M_y	-2.46	-1.19	-4.10	-1.18	▷ -4.10	2.65	BC 22
				Max M_z	-4.30	-2.75	-2.12	0.19	-3.44	▷ 5.49	BC 14
				Min M_z	13.16	7.26	4.17	-2.67	6.48	▷ -15.41	BC 9
66	RC1	22	0.000	Max N	▷ 6.31	2.62	-10.82	0.73	11.96	5.07	BC 2
			Links	Min N	▷ -3.77	-0.45	4.25	-0.08	-3.63	-1.39	BC 15
				Max V_y	6.31	▷ 2.62	-10.82	0.73	11.96	5.07	BC 2
				Min V_y	-1.37	▷ -1.46	-1.92	-0.30	2.00	-1.94	BC 21
				Max V_z	-3.77	-0.45	▷ 4.25	-0.08	-3.63	-1.39	BC 15
				Min V_z	5.72	1.30	▷ -12.53	0.45	13.54	4.54	BC 9
				Max M_T	-0.30	1.31	0.05	▷ 1.01	-3.55	2.03	BC 22
				Min M_T	-1.37	-1.46	-1.92	▷ -0.30	2.00	-1.94	BC 21
				Max M_y	5.67	1.98	-11.49	0.46	▷ 13.66	4.55	BC 12
				Min M_y	-1.44	-0.19	0.06	0.67	▷ -3.74	0.89	BC 23
				Max M_z	6.28	2.06	-12.53	0.64	13.62	▷ 5.13	BC 8
				Min M_z	-1.37	-1.46	-1.92	-0.30	2.00	▷ -1.94	BC 21
			0.000	Max N	▷ 6.31	2.62	-10.82	0.73	11.96	5.07	BC 2
			Rechts	Min N	▷ -3.77	-0.45	4.25	-0.08	-3.63	-1.39	BC 15

4.12 DOORSNEDES - SNEDEKRACHTEN

Resultaatcombinaties

Staaf No.	RC	Knoop No.	Snede x [m]		Krachten [kN] N	V_y	V_z	Momenten [kNm] M_T	M_y	M_z	Bijbehorend Belastingsgeval
66	RC1			Max V_y	6.31	▷ 2.62	-10.82	0.73	11.96	5.07	BC 2
				Min V_y	-1.37	▷ -1.46	-1.92	-0.30	2.00	-1.94	BC 21
				Max V_z	-3.77	-0.45	▷ 4.25	-0.08	-3.63	-1.39	BC 15
				Min V_z	5.72	1.30	▷ -12.53	0.45	13.54	4.54	BC 9
				Max M_T	-0.30	1.31	0.05	▷ 1.01	-3.55	2.03	BC 22
				Min M_T	-1.37	-1.46	-1.92	▷ -0.30	2.00	-1.94	BC 21
				Max M_y	5.67	1.98	-11.49	0.46	▷ 13.66	4.55	BC 12
				Min M_y	-1.44	-0.19	0.06	0.67	▷ -3.74	0.89	BC 23
				Max M_z	6.28	2.06	-12.53	0.64	13.62	▷ 5.13	BC 8
				Min M_z	-1.37	-1.46	-1.92	-0.30	2.00	▷ -1.94	BC 21
			0.583	Max N	▷ 6.47	1.56	-11.78	0.62	6.49	4.05	BC 8
			Links	Min N	▷ -3.72	-0.54	4.15	-0.08	-1.16	-1.11	BC 15
				Max V_y	6.46	▷ 1.97	-10.14	0.72	5.81	3.72	BC 2
				Min V_y	-1.33	▷ -1.55	-1.71	-0.30	0.94	-1.06	BC 21
				Max V_z	-3.72	-0.54	▷ 4.15	-0.08	-1.16	-1.11	BC 15
				Min V_z	6.47	1.56	▷ -11.78	0.62	6.49	4.05	BC 8
				Max M_T	-0.25	0.80	0.26	▷ 1.02	-3.47	1.42	BC 22
				Min M_T	-1.33	-1.55	-1.71	▷ -0.30	0.94	-1.06	BC 21
				Max M_y	5.87	1.49	-10.82	0.45	▷ 7.12	3.52	BC 12
				Min M_y	-1.39	-0.28	0.27	0.67	▷ -3.65	1.02	BC 23
				Max M_z	6.47	1.56	-11.78	0.62	6.49	▷ 4.05	BC 8
				Min M_z	-3.72	-0.54	4.15	-0.08	-1.16	▷ -1.11	BC 15
			0.583	Max N	▷ 6.47	1.56	-11.78	0.62	6.49	4.05	BC 8
			Rechts	Min N	▷ -3.72	-0.54	4.15	-0.08	-1.16	-1.11	BC 15
				Max V_y	6.46	▷ 1.97	-10.14	0.72	5.81	3.72	BC 2
				Min V_y	-1.33	▷ -1.55	-1.71	-0.30	0.94	-1.06	BC 21
				Max V_z	-3.72	-0.54	▷ 4.15	-0.08	-1.16	-1.11	BC 15
				Min V_z	6.47	1.56	▷ -11.78	0.62	6.49	4.05	BC 8
				Max M_T	-0.25	0.80	0.26	▷ 1.02	-3.47	1.42	BC 22
				Min M_T	-1.33	-1.55	-1.71	▷ -0.30	0.94	-1.06	BC 21
				Max M_y	5.87	1.49	-10.82	0.45	▷ 7.12	3.52	BC 12
				Min M_y	-1.39	-0.28	0.27	0.67	▷ -3.65	1.02	BC 23
				Max M_z	6.47	1.56	-11.78	0.62	6.49	▷ 4.05	BC 8
				Min M_z	-3.72	-0.54	4.15	-0.08	-1.16	▷ -1.11	BC 15
			0.645	Max N	▷ 6.51	1.48	-11.64	0.62	5.76	3.96	BC 8
			Links	Min N	▷ -3.72	-0.55	4.11	-0.08	-0.90	-1.07	BC 15
				Max V_y	6.49	▷ 1.89	-10.02	0.72	5.18	3.60	BC 2
				Min V_y	-1.32	▷ -1.56	-1.68	-0.30	0.84	-0.96	BC 21
				Max V_z	-3.72	-0.55	▷ 4.11	-0.08	-0.90	-1.07	BC 15
				Min V_z	6.51	1.48	▷ -11.64	0.62	5.76	3.96	BC 8
				Max M_T	-0.24	0.74	0.28	▷ 1.02	-3.45	1.37	BC 22
				Min M_T	-1.32	-1.56	-1.68	▷ -0.30	0.84	-0.96	BC 21
				Max M_y	5.29	1.75	-8.12	0.37	▷ 6.56	2.54	BC 6
				Min M_y	-1.39	-0.29	0.30	0.67	▷ -3.63	1.04	BC 23
				Max M_z	6.51	1.48	-11.64	0.62	5.76	▷ 3.96	BC 8
				Min M_z	-3.72	-0.55	4.11	-0.08	-0.90	▷ -1.07	BC 15
			0.645	Max N	▷ 6.51	1.48	-11.64	0.62	5.76	3.96	BC 8
			Rechts	Min N	▷ -3.72	-0.55	4.11	-0.08	-0.90	-1.07	BC 15
				Max V_y	6.49	▷ 1.89	-10.02	0.72	5.18	3.60	BC 2
				Min V_y	-1.32	▷ -1.56	-1.68	-0.30	0.84	-0.96	BC 21
				Max V_z	-3.72	-0.55	▷ 4.11	-0.08	-0.90	-1.07	BC 15
				Min V_z	6.51	1.48	▷ -11.64	0.62	5.76	3.96	BC 8
				Max M_T	-0.24	0.74	0.28	▷ 1.02	-3.45	1.37	BC 22
				Min M_T	-1.32	-1.56	-1.68	▷ -0.30	0.84	-0.96	BC 21
				Max M_y	5.29	1.75	-8.12	0.37	▷ 6.56	2.54	BC 6
				Min M_y	-1.39	-0.29	0.30	0.67	▷ -3.63	1.04	BC 23
				Max M_z	6.51	1.48	-11.64	0.62	5.76	▷ 3.96	BC 8
				Min M_z	-3.72	-0.55	4.11	-0.08	-0.90	▷ -1.07	BC 15
			1.290	Max N	▷ 6.72	0.92	-10.79	0.60	-1.40	3.21	BC 8
			Links	Min N	▷ -3.67	-0.64	4.03	-0.08	1.69	-0.69	BC 15
				Max V_y	6.65	▷ 1.16	-9.26	0.71	-0.98	2.63	BC 2
				Min V_y	-1.27	▷ -1.66	-1.45	-0.30	-0.17	0.08	BC 21
				Max V_z	-3.67	-0.64	▷ 4.03	-0.08	1.69	-0.69	BC 15
				Min V_z	6.72	0.92	▷ -10.79	0.60	-1.40	3.21	BC 8
				Max M_T	-0.18	0.18	0.50	▷ 1.02	-3.19	1.08	BC 22
				Min M_T	-1.27	-1.66	-1.45	▷ -0.30	-0.17	0.08	BC 21
				Max M_y	3.21	0.73	-3.26	0.12	▷ 2.47	0.38	BC 18
				Min M_y	-1.34	-0.38	0.53	0.66	▷ -3.36	1.26	BC 23
				Max M_z	6.15	0.63	-10.78	0.42	-1.48	▷ 3.30	BC 9
				Min M_z	-2.51	-0.08	4.01	0.27	1.86	▷ -0.87	BC 14
		23	1.290	Max N	▷ 6.72	0.92	-10.79	0.60	-1.40	3.21	BC 8
			Rechts	Min N	▷ -3.67	-0.64	4.03	-0.08	1.69	-0.69	BC 15
				Max V_y	6.65	▷ 1.16	-9.26	0.71	-0.98	2.63	BC 2
				Min V_y	-1.27	▷ -1.66	-1.45	-0.30	-0.17	0.08	BC 21
				Max V_z	-3.67	-0.64	▷ 4.03	-0.08	1.69	-0.69	BC 15
				Min V_z	6.72	0.92	▷ -10.79	0.60	-1.40	3.21	BC 8
				Max M_T	-0.18	0.18	0.50	▷ 1.02	-3.19	1.08	BC 22
				Min M_T	-1.27	-1.66	-1.45	▷ -0.30	-0.17	0.08	BC 21
				Max M_y	3.21	0.73	-3.26	0.12	▷ 2.47	0.38	BC 18
				Min M_y	-1.34	-0.38	0.53	0.66	▷ -3.36	1.26	BC 23
				Max M_z	6.15	0.63	-10.78	0.42	-1.48	▷ 3.30	BC 9
				Min M_z	-2.51	-0.08	4.01	0.27	1.86	▷ -0.87	BC 14
67	RC1	23	0.000	Max N	▷ 6.87	2.15	-4.82	3.49	-1.13	3.76	BC 8
			Links	Min N	▷ -3.45	-0.42	1.31	-1.46	1.56	-1.09	BC 15

4.12 DOORSNEDES - SNEDEKRACHTEN

Resultaatcombinaties

Staaf No.	RC	Knoop No.	Snede x [m]		Krachten [kN] N	V_y	V_z	Momenten [kNm] M_T	M_y	M_z	Bijbehorend Belastingsgeval
67	RC1			Max V_y	6.50	▷ 2.47	-4.25	3.10	-0.74	3.34	BC 2
				Min V_y	-1.11	▷ -1.03	-0.82	0.10	-0.13	-0.29	BC 21
				Max V_z	-3.45	-0.42	▷ 1.31	-1.46	1.56	-1.09	BC 15
				Min V_z	6.87	2.15	▷ -4.82	3.49	-1.13	3.76	BC 8
				Max M_T	6.87	2.15	-4.82	▷ 3.49	-1.13	3.76	BC 8
				Min M_T	-3.45	-0.42	1.31	▷ -1.46	1.56	-1.09	BC 15
				Max M_y	2.91	1.61	-2.49	0.46	▷ 2.50	0.90	BC 18
				Min M_y	-1.23	0.08	1.10	0.88	▷ -3.31	1.01	BC 23
				Max M_z	6.87	2.15	-4.82	3.49	-1.13	▷ 3.76	BC 8
				Min M_z	-3.45	-0.42	1.31	-1.46	1.56	▷ -1.09	BC 15
			0.000	Max N	▷ 6.87	2.15	-4.82	3.49	-1.13	3.76	BC 8
			Rechts	Min N	▷ -3.45	-0.42	1.31	-1.46	1.56	-1.09	BC 15
				Max V_y	6.50	▷ 2.47	-4.25	3.10	-0.74	3.34	BC 2
				Min V_y	-1.11	▷ -1.03	-0.82	0.10	-0.13	-0.29	BC 21
				Max V_z	-3.45	-0.42	▷ 1.31	-1.46	1.56	-1.09	BC 15
				Min V_z	6.87	2.15	▷ -4.82	3.49	-1.13	3.76	BC 8
				Max M_T	6.87	2.15	-4.82	▷ 3.49	-1.13	3.76	BC 8
				Min M_T	-3.45	-0.42	1.31	▷ -1.46	1.56	-1.09	BC 15
				Max M_y	2.91	1.61	-2.49	0.46	▷ 2.50	0.90	BC 18
				Min M_y	-1.23	0.08	1.10	0.88	▷ -3.31	1.01	BC 23
				Max M_z	6.87	2.15	-4.82	3.49	-1.13	▷ 3.76	BC 8
				Min M_z	-3.45	-0.42	1.31	-1.46	1.56	▷ -1.09	BC 15
			0.583	Max N	▷ 7.04	1.66	-4.11	3.48	-3.79	2.64	BC 8
			Links	Min N	▷ -3.40	-0.51	1.21	-1.46	2.32	-0.82	BC 15
				Max V_y	6.63	▷ 1.83	-3.60	3.10	-3.08	2.07	BC 2
				Min V_y	-1.07	▷ -1.12	-0.61	0.10	-0.55	0.34	BC 21
				Max V_z	-1.19	-0.01	▷ 1.31	0.88	-2.61	0.98	BC 23
				Min V_z	6.49	1.54	▷ -4.13	2.93	-2.54	2.18	BC 12
				Max M_T	7.04	1.66	-4.11	▷ 3.48	-3.79	2.64	BC 8
				Min M_T	-3.40	-0.51	1.21	▷ -1.46	2.32	-0.82	BC 15
				Max M_y	-2.36	0.14	1.08	-1.18	▷ 2.42	-1.26	BC 14
				Min M_y	6.11	1.01	-4.04	3.28	▷ -3.95	2.81	BC 11
				Max M_z	6.52	1.34	-4.05	3.33	-3.83	▷ 2.87	BC 9
				Min M_z	-2.36	0.14	1.08	-1.18	2.42	▷ -1.26	BC 14
			0.583	Max N	▷ 7.04	1.66	-4.11	3.48	-3.79	2.64	BC 8
			Rechts	Min N	▷ -3.40	-0.51	1.21	-1.46	2.32	-0.82	BC 15
				Max V_y	6.63	▷ 1.83	-3.60	3.10	-3.08	2.07	BC 2
				Min V_y	-1.07	▷ -1.12	-0.61	0.10	-0.55	0.34	BC 21
				Max V_z	-1.19	-0.01	▷ 1.31	0.88	-2.61	0.98	BC 23
				Min V_z	6.49	1.54	▷ -4.13	2.93	-2.54	2.18	BC 12
				Max M_T	7.04	1.66	-4.11	▷ 3.48	-3.79	2.64	BC 8
				Min M_T	-3.40	-0.51	1.21	▷ -1.46	2.32	-0.82	BC 15
				Max M_y	-2.36	0.14	1.08	-1.18	▷ 2.42	-1.26	BC 14
				Min M_y	6.11	1.01	-4.04	3.28	▷ -3.95	2.81	BC 11
				Max M_z	6.52	1.34	-4.05	3.33	-3.83	▷ 2.87	BC 9
				Min M_z	-2.36	0.14	1.08	-1.18	2.42	▷ -1.26	BC 14
			0.645	Max N	▷ 7.08	1.59	-3.97	3.48	-4.04	2.54	BC 8
			Links	Min N	▷ -3.40	-0.52	1.17	-1.46	2.39	-0.79	BC 15
				Max V_y	6.65	▷ 1.75	-3.48	3.10	-3.30	1.96	BC 2
				Min V_y	-1.07	▷ -1.13	-0.59	0.10	-0.59	0.41	BC 21
				Max V_z	-1.19	-0.02	▷ 1.34	0.88	-2.53	0.99	BC 23
				Min V_z	6.52	1.47	▷ -4.01	2.93	-2.80	2.09	BC 12
				Max M_T	7.08	1.59	-3.97	▷ 3.48	-4.04	2.54	BC 8
				Min M_T	-3.40	-0.52	1.17	▷ -1.46	2.39	-0.79	BC 15
				Max M_y	-2.36	0.08	1.05	-1.18	▷ 2.49	-1.27	BC 14
				Min M_y	6.14	0.96	-3.90	3.28	▷ -4.20	2.75	BC 11
				Max M_z	6.55	1.29	-3.91	3.33	-4.08	▷ 2.78	BC 9
				Min M_z	-2.36	0.08	1.05	-1.18	2.49	▷ -1.27	BC 14
			0.645	Max N	▷ 7.08	1.59	-3.97	3.48	-4.04	2.54	BC 8
			Rechts	Min N	▷ -3.40	-0.52	1.17	-1.46	2.39	-0.79	BC 15
				Max V_y	6.65	▷ 1.75	-3.48	3.10	-3.30	1.96	BC 2
				Min V_y	-1.07	▷ -1.13	-0.59	0.10	-0.59	0.41	BC 21
				Max V_z	-1.19	-0.02	▷ 1.34	0.88	-2.53	0.99	BC 23
				Min V_z	6.52	1.47	▷ -4.01	2.93	-2.80	2.09	BC 12
				Max M_T	7.08	1.59	-3.97	▷ 3.48	-4.04	2.54	BC 8
				Min M_T	-3.40	-0.52	1.17	▷ -1.46	2.39	-0.79	BC 15
				Max M_y	-2.36	0.08	1.05	-1.18	▷ 2.49	-1.27	BC 14
				Min M_y	6.14	0.96	-3.90	3.28	▷ -4.20	2.75	BC 11
				Max M_z	6.55	1.29	-3.91	3.33	-4.08	▷ 2.78	BC 9
				Min M_z	-2.36	0.08	1.05	-1.18	2.49	▷ -1.27	BC 14
			1.290	Max N	▷ 7.27	1.04	-3.17	3.48	-6.27	1.71	BC 8
			Links	Min N	▷ -3.35	-0.61	1.09	-1.46	3.09	-0.42	BC 15
				Max V_y	7.27	▷ 1.04	-3.17	3.48	-6.27	1.71	BC 8
				Min V_y	-1.02	▷ -1.22	-0.36	0.09	-0.89	1.17	BC 21
				Max V_z	-1.14	-0.11	▷ 1.57	0.88	-1.59	1.03	BC 23
				Min V_z	6.72	0.92	▷ -3.28	2.92	-5.09	1.35	BC 12
				Max M_T	7.27	1.04	-3.17	▷ 3.48	-6.27	1.71	BC 8
				Min M_T	-3.35	-0.61	1.09	▷ -1.46	3.09	-0.42	BC 15
				Max M_y	-2.29	-0.48	0.95	-1.18	▷ 3.10	-1.14	BC 14
				Min M_y	6.86	0.71	-3.15	3.42	▷ -6.38	1.90	BC 10
				Max M_z	6.33	0.64	-3.09	3.27	-6.38	▷ 2.26	BC 11
				Min M_z	-2.29	-0.48	0.95	-1.18	3.10	▷ -1.14	BC 14
		24	1.290	Max N	▷ 7.27	1.04	-3.17	3.48	-6.27	1.71	BC 8
			Rechts	Min N	▷ -3.35	-0.61	1.09	-1.46	3.09	-0.42	BC 15

4.12 DOORSNEDES - SNEDEKRACHTEN

Resultaatcombinaties

Staaf No.	RC	Knoop No.	Snede x [m]		Krachten [kN] N	V_y	V_z	Momenten [kNm] M_T	M_y	M_z	Bijbehorend Belastingsgeval
67	RC1			Max V_y	7.27	⊳ 1.04	-3.17	3.48	-6.27	1.71	BC 8
				Min V_y	-1.02	⊳ -1.22	-0.36	0.09	-0.89	1.17	BC 21
				Max V_z	-1.14	-0.11	⊳ 1.57	0.88	-1.59	1.03	BC 23
				Min V_z	6.72	0.92	⊳ -3.28	2.92	-5.09	1.35	BC 12
				Max M_T	7.27	1.04	-3.17	⊳ 3.48	-6.27	1.71	BC 8
				Min M_T	-3.35	-0.61	1.09	⊳ -1.46	3.09	-0.42	BC 15
				Max M_y	-2.29	-0.48	0.95	-1.18	⊳ 3.10	-1.14	BC 14
				Min M_y	6.86	0.71	-3.15	3.42	⊳ -6.38	1.90	BC 10
				Max M_z	6.33	0.64	-3.09	3.27	-6.38	⊳ 2.26	BC 11
				Min M_z	-2.29	-0.48	0.95	-1.18	3.10	⊳ -1.14	BC 14
68	RC1	24	0.000	Max N	⊳ 6.11	14.64	2.67	6.82	-6.07	2.50	BC 8
			Links	Min N	⊳ -2.65	-4.86	-1.69	-3.07	2.97	-0.88	BC 15
				Max V_y	6.11	⊳ 14.64	2.67	6.82	-6.07	2.50	BC 8
				Min V_y	-2.65	⊳ -4.86	-1.69	-3.07	2.97	-0.88	BC 15
				Max V_z	5.35	13.09	⊳ 2.80	6.67	-6.17	2.85	BC 11
				Min V_z	-1.81	-3.13	⊳ -1.93	-2.87	2.98	-1.41	BC 14
				Max M_T	6.11	14.64	2.67	⊳ 6.82	-6.07	2.50	BC 8
				Min M_T	-2.65	-4.86	-1.69	⊳ -3.07	2.97	-0.88	BC 15
				Max M_y	-1.81	-3.13	-1.93	-2.87	⊳ 2.98	-1.41	BC 14
				Min M_y	5.35	13.09	2.80	6.67	⊳ -6.17	2.85	BC 11
				Max M_z	5.35	13.09	2.80	6.67	-6.17	⊳ 2.85	BC 11
				Min M_z	-1.81	-3.13	-1.93	-2.87	2.98	⊳ -1.41	BC 14
			0.000	Max N	⊳ 6.11	14.64	2.67	6.82	-6.07	2.50	BC 8
			Rechts	Min N	⊳ -2.65	-4.86	-1.69	-3.07	2.97	-0.88	BC 15
				Max V_y	6.11	⊳ 14.64	2.67	6.82	-6.07	2.50	BC 8
				Min V_y	-2.65	⊳ -4.86	-1.69	-3.07	2.97	-0.88	BC 15
				Max V_z	5.35	13.09	⊳ 2.80	6.67	-6.17	2.85	BC 11
				Min V_z	-1.81	-3.13	⊳ -1.93	-2.87	2.98	-1.41	BC 14
				Max M_T	6.11	14.64	2.67	⊳ 6.82	-6.07	2.50	BC 8
				Min M_T	-2.65	-4.86	-1.69	⊳ -3.07	2.97	-0.88	BC 15
				Max M_y	-1.81	-3.13	-1.93	-2.87	⊳ 2.98	-1.41	BC 14
				Min M_y	5.35	13.09	2.80	6.67	⊳ -6.17	2.85	BC 11
				Max M_z	5.35	13.09	2.80	6.67	-6.17	⊳ 2.85	BC 11
				Min M_z	-1.81	-3.13	-1.93	-2.87	2.98	⊳ -1.41	BC 14
			0.583	Max N	⊳ 6.27	14.18	3.34	6.86	-4.37	-5.91	BC 8
			Links	Min N	⊳ -2.60	-4.95	-1.79	-3.07	1.97	1.97	BC 15
				Max V_y	6.27	⊳ 14.18	3.34	6.86	-4.37	-5.91	BC 8
				Min V_y	-2.60	⊳ -4.95	-1.79	-3.07	1.97	1.97	BC 15
				Max V_z	5.51	12.84	⊳ 3.47	6.71	-4.40	-4.72	BC 11
				Min V_z	-1.75	-3.63	⊳ -2.04	-2.87	1.86	0.56	BC 14
				Max M_T	6.27	14.18	3.34	⊳ 6.86	-4.37	-5.91	BC 8
				Min M_T	-2.60	-4.95	-1.79	⊳ -3.07	1.97	1.97	BC 15
				Max M_y	-2.60	-4.95	-1.79	-3.07	⊳ 1.97	1.97	BC 15
				Min M_y	5.95	13.50	3.35	6.82	⊳ -4.46	-5.44	BC 10
				Max M_z	-2.60	-4.95	-1.79	-3.07	1.97	⊳ 1.97	BC 15
				Min M_z	6.27	14.18	3.34	6.86	-4.37	⊳ -5.91	BC 8
			0.583	Max N	⊳ 6.27	14.18	3.34	6.86	-4.37	-5.91	BC 8
			Rechts	Min N	⊳ -2.60	-4.95	-1.79	-3.07	1.97	1.97	BC 15
				Max V_y	6.27	⊳ 14.18	3.34	6.86	-4.37	-5.91	BC 8
				Min V_y	-2.60	⊳ -4.95	-1.79	-3.07	1.97	1.97	BC 15
				Max V_z	5.51	12.84	⊳ 3.47	6.71	-4.40	-4.72	BC 11
				Min V_z	-1.75	-3.63	⊳ -2.04	-2.87	1.86	0.56	BC 14
				Max M_T	6.27	14.18	3.34	⊳ 6.86	-4.37	-5.91	BC 8
				Min M_T	-2.60	-4.95	-1.79	⊳ -3.07	1.97	1.97	BC 15
				Max M_y	-2.60	-4.95	-1.79	-3.07	⊳ 1.97	1.97	BC 15
				Min M_y	5.95	13.50	3.35	6.82	⊳ -4.46	-5.44	BC 10
				Max M_z	-2.60	-4.95	-1.79	-3.07	1.97	⊳ 1.97	BC 15
				Min M_z	6.27	14.18	3.34	6.86	-4.37	⊳ -5.91	BC 8
			0.645	Max N	⊳ 6.30	14.11	3.46	6.87	-4.16	-6.79	BC 8
			Links	Min N	⊳ -2.60	-4.96	-1.83	-3.07	1.86	2.28	BC 15
				Max V_y	6.30	⊳ 14.11	3.46	6.87	-4.16	-6.79	BC 8
				Min V_y	-2.60	⊳ -4.96	-1.83	-3.07	1.86	2.28	BC 15
				Max V_z	5.54	12.79	⊳ 3.60	6.71	-4.18	-5.52	BC 11
				Min V_z	-1.75	-3.69	⊳ -2.08	-2.87	1.73	0.79	BC 14
				Max M_T	6.30	14.11	3.46	⊳ 6.87	-4.16	-6.79	BC 8
				Min M_T	-2.60	-4.96	-1.83	⊳ -3.07	1.86	2.28	BC 15
				Max M_y	-2.60	-4.96	-1.83	-3.07	⊳ 1.86	2.28	BC 15
				Min M_y	5.98	13.43	3.48	6.82	⊳ -4.25	-6.28	BC 10
				Max M_z	-2.60	-4.96	-1.83	-3.07	1.86	⊳ 2.28	BC 15
				Min M_z	6.30	14.11	3.46	6.87	-4.16	⊳ -6.79	BC 8
			0.645	Max N	⊳ 6.30	14.11	3.46	6.87	-4.16	-6.79	BC 8
			Rechts	Min N	⊳ -2.60	-4.96	-1.83	-3.07	1.86	2.28	BC 15
				Max V_y	6.30	⊳ 14.11	3.46	6.87	-4.16	-6.79	BC 8
				Min V_y	-2.60	⊳ -4.96	-1.83	-3.07	1.86	2.28	BC 15
				Max V_z	5.54	12.79	⊳ 3.60	6.71	-4.18	-5.52	BC 11
				Min V_z	-1.75	-3.69	⊳ -2.08	-2.87	1.73	0.79	BC 14
				Max M_T	6.30	14.11	3.46	⊳ 6.87	-4.16	-6.79	BC 8
				Min M_T	-2.60	-4.96	-1.83	⊳ -3.07	1.86	2.28	BC 15
				Max M_y	-2.60	-4.96	-1.83	-3.07	⊳ 1.86	2.28	BC 15
				Min M_y	5.98	13.43	3.48	6.82	⊳ -4.25	-6.28	BC 10
				Max M_z	-2.60	-4.96	-1.83	-3.07	1.86	⊳ 2.28	BC 15
				Min M_z	6.30	14.11	3.46	6.87	-4.16	⊳ -6.79	BC 8
			1.290	Max N	⊳ 6.46	13.61	4.21	6.91	-1.62	-15.71	BC 8
			Links	Min N	⊳ -2.55	-5.05	-1.92	-3.07	0.62	5.51	BC 15

4.12 DOORSNEDES - SNEDEKRACHTEN

Resultaatcombinaties

Staaf No.	RC	Knoop No.	Snede x [m]		Krachten [kN] N	V_y	V_z	Momenten [kNm] M_T	M_y	M_z	Bijbehorend Belastingsgeval
68	RC1			Max V_y	6.46	▷ 13.61	4.21	6.91	-1.62	-15.71	BC 8
				Min V_y	-2.55	▷ -5.05	-1.92	-3.07	0.62	5.51	BC 15
				Max V_z	5.70	12.52	▷ 4.35	6.76	-1.55	-13.65	BC 11
				Min V_z	-1.68	-4.25	▷ -2.17	-2.87	0.33	3.35	BC 14
				Max M_T	6.46	13.61	4.21	▷ 6.91	-1.62	-15.71	BC 8
				Min M_T	-2.55	-5.05	-1.92	▷ -3.07	0.62	5.51	BC 15
				Max M_y	-0.92	-0.57	2.63	1.19	▷ 1.51	1.48	BC 23
				Min M_y	6.06	12.49	3.08	5.81	▷ -1.84	-14.72	BC 12
				Max M_z	-2.55	-5.05	-1.92	-3.07	0.62	▷ 5.51	BC 15
				Min M_z	6.46	13.61	4.21	6.91	-1.62	▷ -15.71	BC 8
		6	1.290	Max N	▷ 6.46	13.61	4.21	6.91	-1.62	-15.71	BC 8
			Rechts	Min N	▷ -2.55	-5.05	-1.92	-3.07	0.62	5.51	BC 15
				Max V_y	6.46	▷ 13.61	4.21	6.91	-1.62	-15.71	BC 8
				Min V_y	-2.55	▷ -5.05	-1.92	-3.07	0.62	5.51	BC 15
				Max V_z	5.70	12.52	▷ 4.35	6.76	-1.55	-13.65	BC 11
				Min V_z	-1.68	-4.25	▷ -2.17	-2.87	0.33	3.35	BC 14
				Max M_T	6.46	13.61	4.21	▷ 6.91	-1.62	-15.71	BC 8
				Min M_T	-2.55	-5.05	-1.92	▷ -3.07	0.62	5.51	BC 15
				Max M_y	-0.92	-0.57	2.63	1.19	▷ 1.51	1.48	BC 23
				Min M_y	6.06	12.49	3.08	5.81	▷ -1.84	-14.72	BC 12
				Max M_z	-2.55	-5.05	-1.92	-3.07	0.62	▷ 5.51	BC 15
				Min M_z	6.46	13.61	4.21	6.91	-1.62	▷ -15.71	BC 8
77	RC1	25	0.000	Max N	▷ 6.31	2.62	10.82	-0.73	-11.96	5.07	BC 2
			Links	Min N	▷ -4.20	-0.42	-4.09	0.22	3.81	-1.54	BC 15
				Max V_y	6.31	▷ 2.62	10.82	-0.73	-11.96	5.07	BC 2
				Min V_y	-1.82	▷ -1.44	2.08	0.45	-1.82	-2.09	BC 21
				Max V_z	5.49	1.31	▷ 12.62	-0.38	-13.46	4.47	BC 9
				Min V_z	-2.64	1.05	▷ -4.25	-0.27	3.45	-0.25	BC 14
				Max M_T	-2.26	-0.05	-2.10	▷ 0.86	-2.46	-1.70	BC 23
				Min M_T	5.38	2.43	9.83	▷ -1.01	-8.84	5.14	BC 6
				Max M_y	-4.20	-0.42	-4.09	0.22	▷ 3.81	-1.54	BC 15
				Min M_y	6.28	2.06	12.53	-0.64	▷ -13.62	5.13	BC 8
				Max M_z	5.82	1.96	12.04	-0.77	-12.06	▷ 5.16	BC 12
				Min M_z	-1.82	-1.44	2.08	0.45	-1.82	▷ -2.09	BC 21
			0.000	Max N	▷ 6.31	2.62	10.82	-0.73	-11.96	5.07	BC 2
			Rechts	Min N	▷ -4.20	-0.42	-4.09	0.22	3.81	-1.54	BC 15
				Max V_y	6.31	▷ 2.62	10.82	-0.73	-11.96	5.07	BC 2
				Min V_y	-1.82	▷ -1.44	2.08	0.45	-1.82	-2.09	BC 21
				Max V_z	5.49	1.31	▷ 12.62	-0.38	-13.46	4.47	BC 9
				Min V_z	-2.64	1.05	▷ -4.25	-0.27	3.45	-0.25	BC 14
				Max M_T	-2.26	-0.05	-2.10	▷ 0.86	-2.46	-1.70	BC 23
				Min M_T	5.38	2.43	9.83	▷ -1.01	-8.84	5.14	BC 6
				Max M_y	-4.20	-0.42	-4.09	0.22	▷ 3.81	-1.54	BC 15
				Min M_y	6.28	2.06	12.53	-0.64	▷ -13.62	5.13	BC 8
				Max M_z	5.82	1.96	12.04	-0.77	-12.06	▷ 5.16	BC 12
				Min M_z	-1.82	-1.44	2.08	0.45	-1.82	▷ -2.09	BC 21
			0.583	Max N	▷ 6.47	1.56	11.78	-0.62	-6.49	4.05	BC 8
			Links	Min N	▷ -4.13	-0.50	-3.98	0.22	1.44	-1.27	BC 15
				Max V_y	6.46	▷ 1.97	10.14	-0.72	-5.81	3.72	BC 2
				Min V_y	-1.75	▷ -1.52	1.88	0.45	-0.66	-1.23	BC 21
				Max V_z	5.69	1.03	▷ 11.86	-0.37	-6.27	3.77	BC 9
				Min V_z	-2.58	0.54	▷ -4.14	-0.27	0.98	-0.71	BC 14
				Max M_T	-2.19	-0.14	-1.99	▷ 0.87	-3.68	-1.65	BC 23
				Min M_T	5.53	1.78	9.15	▷ -0.99	-3.27	3.90	BC 6
				Max M_y	-4.13	-0.50	-3.98	0.22	▷ 1.44	-1.27	BC 15
				Min M_y	6.47	1.56	11.78	-0.62	▷ -6.49	4.05	BC 8
				Max M_z	6.01	1.46	11.28	-0.76	-5.22	▷ 4.15	BC 12
				Min M_z	-2.19	-0.14	-1.99	0.87	-3.68	▷ -1.65	BC 23
			0.583	Max N	▷ 6.47	1.56	11.78	-0.62	-6.49	4.05	BC 8
			Rechts	Min N	▷ -4.13	-0.50	-3.98	0.22	1.44	-1.27	BC 15
				Max V_y	6.46	▷ 1.97	10.14	-0.72	-5.81	3.72	BC 2
				Min V_y	-1.75	▷ -1.52	1.88	0.45	-0.66	-1.23	BC 21
				Max V_z	5.69	1.03	▷ 11.86	-0.37	-6.27	3.77	BC 9
				Min V_z	-2.58	0.54	▷ -4.14	-0.27	0.98	-0.71	BC 14
				Max M_T	-2.19	-0.14	-1.99	▷ 0.87	-3.68	-1.65	BC 23
				Min M_T	5.53	1.78	9.15	▷ -0.99	-3.27	3.90	BC 6
				Max M_y	-4.13	-0.50	-3.98	0.22	▷ 1.44	-1.27	BC 15
				Min M_y	6.47	1.56	11.78	-0.62	▷ -6.49	4.05	BC 8
				Max M_z	6.01	1.46	11.28	-0.76	-5.22	▷ 4.15	BC 12
				Min M_z	-2.19	-0.14	-1.99	0.87	-3.68	▷ -1.65	BC 23
			0.645	Max N	▷ 6.51	1.48	11.64	-0.62	-5.76	3.96	BC 8
			Links	Min N	▷ -4.12	-0.51	-3.94	0.22	1.19	-1.24	BC 15
				Max V_y	6.49	▷ 1.89	10.02	-0.72	-5.18	3.60	BC 2
				Min V_y	-1.74	▷ -1.53	1.85	0.45	-0.55	-1.13	BC 21
				Max V_z	5.73	0.98	▷ 11.72	-0.37	-5.54	3.70	BC 9
				Min V_z	-2.57	0.48	▷ -4.10	-0.27	0.72	-0.74	BC 14
				Max M_T	-2.19	-0.15	-1.95	▷ 0.87	-3.80	-1.64	BC 23
				Min M_T	5.55	1.70	9.02	▷ -0.99	-2.71	3.79	BC 6
				Max M_y	-4.12	-0.51	-3.94	0.22	▷ 1.19	-1.24	BC 15
				Min M_y	6.51	1.48	11.64	-0.62	▷ -5.76	3.96	BC 8
				Max M_z	6.04	1.39	11.14	-0.76	-4.52	▷ 4.06	BC 12
				Min M_z	-2.19	-0.15	-1.95	0.87	-3.80	▷ -1.64	BC 23
			0.645	Max N	▷ 6.51	1.48	11.64	-0.62	-5.76	3.96	BC 8
			Rechts	Min N	▷ -4.12	-0.51	-3.94	0.22	1.19	-1.24	BC 15

4.12 DOORSNEDES - SNEDEKRACHTEN

Resultaatcombinaties

Staaf No.	RC	Knoop No.	Snede x [m]		Krachten [kN] N	V_y	V_z	Momenten [kNm] M_T	M_y	M_z	Bijbehorend Belastingsgeval
77	RC1			Max V_y	6.49	⊳ 1.89	10.02	-0.72	-5.18	3.60	BC 2
				Min V_y	-1.74	⊳ -1.53	1.85	0.45	-0.55	-1.13	BC 21
				Max V_z	5.73	0.98	⊳ 11.72	-0.37	-5.54	3.70	BC 9
				Min V_z	-2.57	0.48	⊳ -4.10	-0.27	0.72	-0.74	BC 14
				Max M_T	-2.19	-0.15	-1.95	⊳ 0.87	-3.80	-1.64	BC 23
				Min M_T	5.55	1.70	9.02	⊳ -0.99	-2.71	3.79	BC 6
				Max M_y	-4.12	-0.51	-3.94	0.22	⊳ 1.19	-1.24	BC 15
				Min M_y	6.51	1.48	11.64	-0.62	⊳ -5.76	3.96	BC 8
				Max M_z	6.04	1.39	11.14	-0.76	-4.52	⊳ 4.06	BC 12
				Min M_z	-2.19	-0.15	-1.95	0.87	-3.80	⊳ -1.64	BC 23
			1.290	Max N	⊳ 6.72	0.92	10.79	-0.60	1.40	3.21	BC 8
			Links	Min N	⊳ -4.05	-0.61	-3.85	0.23	-1.30	-0.88	BC 15
				Max V_y	6.65	⊳ 1.16	9.26	-0.71	0.98	2.63	BC 2
				Min V_y	-1.66	⊳ -1.62	1.63	0.45	0.57	-0.11	BC 21
				Max V_z	5.95	0.65	⊳ 10.87	-0.36	1.68	3.20	BC 9
				Min V_z	-2.51	-0.08	⊳ -4.01	-0.27	-1.86	-0.87	BC 14
				Max M_T	-2.11	-0.24	-1.86	⊳ 0.87	-5.00	-1.51	BC 23
				Min M_T	5.71	0.98	8.27	⊳ -0.98	2.82	2.95	BC 6
				Max M_y	4.17	0.44	8.44	-0.49	⊳ 3.37	2.94	BC 7
				Min M_y	-0.56	0.29	-2.01	0.37	⊳ -5.57	-1.50	BC 22
				Max M_z	6.25	0.83	10.29	-0.74	2.32	⊳ 3.37	BC 12
				Min M_z	-2.11	-0.24	-1.86	0.87	-5.00	⊳ -1.51	BC 23
		26	1.290	Max N	⊳ 6.72	0.92	10.79	-0.60	1.40	3.21	BC 8
			Rechts	Min N	⊳ -4.05	-0.61	-3.85	0.23	-1.30	-0.88	BC 15
				Max V_y	6.65	⊳ 1.16	9.26	-0.71	0.98	2.63	BC 2
				Min V_y	-1.66	⊳ -1.62	1.63	0.45	0.57	-0.11	BC 21
				Max V_z	5.95	0.65	⊳ 10.87	-0.36	1.68	3.20	BC 9
				Min V_z	-2.51	-0.08	⊳ -4.01	-0.27	-1.86	-0.87	BC 14
				Max M_T	-2.11	-0.24	-1.86	⊳ 0.87	-5.00	-1.51	BC 23
				Min M_T	5.71	0.97	8.27	⊳ -0.98	2.82	2.95	BC 6
				Max M_y	4.17	0.44	8.44	-0.49	⊳ 3.37	2.94	BC 7
				Min M_y	-0.56	0.29	-2.01	0.37	⊳ -5.57	-1.50	BC 22
				Max M_z	6.25	0.83	10.29	-0.74	2.32	⊳ 3.37	BC 12
				Min M_z	-2.11	-0.24	-1.86	0.87	-5.00	⊳ -1.51	BC 23
78	RC1	26	0.000	Max N	⊳ 6.87	2.15	4.82	-3.49	1.13	3.76	BC 8
			Links	Min N	⊳ -3.71	-0.46	-1.08	1.60	-1.16	-1.22	BC 15
				Max V_y	6.50	⊳ 2.47	4.25	-3.10	0.74	3.34	BC 2
				Min V_y	-1.38	⊳ -1.07	1.05	0.05	0.53	-0.43	BC 21
				Max V_z	6.22	1.59	⊳ 4.89	-3.28	1.41	3.67	BC 9
				Min V_z	-2.42	0.65	⊳ -1.19	1.18	-1.73	-1.03	BC 14
				Max M_T	-1.98	-0.24	0.90	⊳ 2.20	-4.83	-1.52	BC 23
				Min M_T	6.44	2.09	4.33	⊳ -3.61	2.05	3.85	BC 12
				Max M_y	4.34	1.25	3.39	-2.94	⊳ 3.13	3.30	BC 7
				Min M_y	-0.68	0.87	0.79	1.77	⊳ -5.41	-1.33	BC 22
				Max M_z	6.44	2.09	4.33	-3.61	2.05	⊳ 3.85	BC 12
				Min M_z	-1.98	-0.24	0.90	2.20	-4.83	⊳ -1.52	BC 23
			0.000	Max N	⊳ 6.87	2.15	4.82	-3.49	1.13	3.76	BC 8
			Rechts	Min N	⊳ -3.71	-0.46	-1.08	1.60	-1.16	-1.22	BC 15
				Max V_y	6.50	⊳ 2.47	4.25	-3.10	0.74	3.34	BC 2
				Min V_y	-1.38	⊳ -1.07	1.05	0.05	0.53	-0.43	BC 21
				Max V_z	6.22	1.59	⊳ 4.89	-3.28	1.41	3.67	BC 9
				Min V_z	-2.42	0.65	⊳ -1.19	1.18	-1.73	-1.03	BC 14
				Max M_T	-1.98	-0.24	0.90	⊳ 2.20	-4.83	-1.52	BC 23
				Min M_T	6.44	2.09	4.33	⊳ -3.61	2.05	3.85	BC 12
				Max M_y	4.34	1.25	3.39	-2.94	⊳ 3.13	3.30	BC 7
				Min M_y	-0.68	0.87	0.79	1.77	⊳ -5.41	-1.33	BC 22
				Max M_z	6.44	2.09	4.33	-3.61	2.05	⊳ 3.85	BC 12
				Min M_z	-1.98	-0.24	0.90	2.20	-4.83	⊳ -1.52	BC 23
			0.583	Max N	⊳ 7.04	1.66	4.11	-3.48	3.79	2.64	BC 8
			Links	Min N	⊳ -3.64	-0.54	-0.97	1.60	-1.78	-0.93	BC 15
				Max V_y	6.63	⊳ 1.83	3.60	-3.10	3.08	2.07	BC 2
				Min V_y	-1.31	⊳ -1.16	0.85	0.04	1.09	0.22	BC 21
				Max V_z	6.40	1.32	⊳ 4.17	-3.27	4.10	2.81	BC 9
				Min V_z	-2.36	0.14	⊳ -1.08	1.18	-2.42	-1.26	BC 14
				Max M_T	-1.91	-0.33	1.00	⊳ 2.19	-4.31	-1.36	BC 23
				Min M_T	6.61	1.61	3.61	⊳ -3.61	4.42	2.75	BC 12
				Max M_y	4.49	1.03	2.74	-2.93	⊳ 4.96	2.63	BC 7
				Min M_y	-0.62	0.36	0.90	1.77	⊳ -4.95	-1.69	BC 22
				Max M_z	5.97	1.26	3.68	-3.40	4.73	⊳ 2.92	BC 13
				Min M_z	-0.62	0.36	0.90	1.77	-4.95	⊳ -1.69	BC 22
			0.583	Max N	⊳ 7.04	1.66	4.11	-3.48	3.79	2.64	BC 8
			Rechts	Min N	⊳ -3.64	-0.54	-0.97	1.60	-1.78	-0.93	BC 15
				Max V_y	6.63	⊳ 1.83	3.60	-3.10	3.08	2.07	BC 2
				Min V_y	-1.31	⊳ -1.16	0.85	0.04	1.09	0.22	BC 21
				Max V_z	6.40	1.32	⊳ 4.17	-3.27	4.10	2.81	BC 9
				Min V_z	-2.36	0.14	⊳ -1.08	1.18	-2.42	-1.26	BC 14
				Max M_T	-1.91	-0.33	1.00	⊳ 2.19	-4.31	-1.36	BC 23
				Min M_T	6.61	1.61	3.61	⊳ -3.61	4.42	2.75	BC 12
				Max M_y	4.49	1.03	2.74	-2.93	⊳ 4.96	2.63	BC 7
				Min M_y	-0.62	0.36	0.90	1.77	⊳ -4.95	-1.69	BC 22
				Max M_z	5.97	1.26	3.68	-3.40	4.73	⊳ 2.92	BC 13
				Min M_z	-0.62	0.36	0.90	1.77	-4.95	⊳ -1.69	BC 22
			0.645	Max N	⊳ 7.08	1.59	3.97	-3.48	4.04	2.54	BC 8
			Links	Min N	⊳ -3.63	-0.56	-0.94	1.60	-1.84	-0.90	BC 15

4.12 DOORSNEDES - SNEDEKRACHTEN

Resultaatcombinaties

Staaf No.	RC	Knoop No.	Snede x [m]		Krachten [kN] N	V_y	V_z	Momenten [kNm] M_T	M_y	M_z	Bijbehorend Belastingsgeval
78	RC1			Max V_y	6.65	▷ 1.75	3.48	-3.10	3.30	1.96	BC 2
				Min V_y	-1.30	▷ -1.17	0.82	0.04	1.14	0.30	BC 21
				Max V_z	6.44	1.27	▷ 4.04	-3.27	4.35	2.72	BC 9
				Min V_z	-2.36	0.08	▷ -1.05	1.18	-2.49	-1.27	BC 14
				Max M_T	-1.90	-0.34	1.04	▷ 2.19	-4.24	-1.34	BC 23
				Min M_T	6.64	1.53	3.48	▷ -3.61	4.64	2.66	BC 12
				Max M_y	4.51	1.00	2.62	-2.93	▷ 5.12	2.57	BC 7
				Min M_y	-0.61	0.30	0.93	1.77	▷ -4.89	-1.71	BC 22
				Max M_z	6.00	1.21	3.54	-3.40	4.95	▷ 2.84	BC 13
				Min M_z	-0.61	0.30	0.93	1.77	-4.89	▷ -1.71	BC 22
			0.645	Max N	▷ 7.08	1.59	3.97	-3.48	4.04	2.54	BC 8
			Rechts	Min N	▷ -3.63	-0.56	-0.94	1.60	-1.84	-0.90	BC 15
				Max V_y	6.65	▷ 1.75	3.48	-3.10	3.30	1.96	BC 2
				Min V_y	-1.30	▷ -1.17	0.82	0.04	1.14	0.30	BC 21
				Max V_z	6.44	1.27	▷ 4.04	-3.27	4.35	2.72	BC 9
				Min V_z	-2.36	0.08	▷ -1.05	1.18	-2.49	-1.27	BC 14
				Max M_T	-1.90	-0.34	1.04	▷ 2.19	-4.24	-1.34	BC 23
				Min M_T	6.64	1.53	3.48	▷ -3.61	4.64	2.66	BC 12
				Max M_y	4.51	1.00	2.62	-2.93	▷ 5.12	2.57	BC 7
				Min M_y	-0.61	0.30	0.93	1.77	▷ -4.89	-1.71	BC 22
				Max M_z	6.00	1.21	3.54	-3.40	4.95	▷ 2.84	BC 13
				Min M_z	-0.61	0.30	0.93	1.77	-4.89	▷ -1.71	BC 22
			1.290	Max N	▷ 7.27	1.04	3.17	-3.48	6.27	1.71	BC 8
			Links	Min N	▷ -3.56	-0.65	-0.84	1.60	-2.39	-0.51	BC 15
				Max V_y	7.27	▷ 1.04	3.17	-3.48	6.27	1.71	BC 8
				Min V_y	-1.23	▷ -1.26	0.60	0.04	1.59	1.08	BC 21
				Max V_z	6.64	0.96	▷ 3.23	-3.27	6.63	2.03	BC 9
				Min V_z	-2.29	-0.48	▷ -0.95	1.18	-3.10	-1.14	BC 14
				Max M_T	-1.83	-0.43	1.13	▷ 2.19	-3.51	-1.09	BC 23
				Min M_T	6.83	0.99	2.67	▷ -3.60	6.55	1.87	BC 12
				Max M_y	6.21	0.90	2.73	-3.39	▷ 6.91	2.19	BC 13
				Min M_y	-0.55	-0.26	1.03	1.77	▷ -4.23	-1.72	BC 22
				Max M_z	6.23	0.62	3.21	-3.21	6.74	▷ 2.22	BC 11
				Min M_z	-0.55	-0.26	1.03	1.77	-4.23	▷ -1.72	BC 22
		27	1.290	Max N	▷ 7.27	1.04	3.17	-3.48	6.27	1.71	BC 8
			Rechts	Min N	▷ -3.56	-0.65	-0.84	1.60	-2.39	-0.51	BC 15
				Max V_y	7.27	▷ 1.04	3.17	-3.48	6.27	1.71	BC 8
				Min V_y	-1.23	▷ -1.26	0.60	0.04	1.59	1.08	BC 21
				Max V_z	6.64	0.96	▷ 3.23	-3.27	6.63	2.03	BC 9
				Min V_z	-2.29	-0.48	▷ -0.95	1.18	-3.10	-1.14	BC 14
				Max M_T	-1.83	-0.43	1.13	▷ 2.19	-3.51	-1.09	BC 23
				Min M_T	6.83	0.99	2.67	▷ -3.60	6.55	1.87	BC 12
				Max M_y	6.21	0.90	2.73	-3.39	▷ 6.91	2.19	BC 13
				Min M_y	-0.55	-0.26	1.03	1.77	▷ -4.23	-1.72	BC 22
				Max M_z	6.23	0.62	3.21	-3.21	6.74	▷ 2.22	BC 11
				Min M_z	-0.55	-0.26	1.03	1.77	-4.23	▷ -1.72	BC 22
79	RC1	27	0.000	Max N	▷ 6.11	14.64	-2.67	-6.82	6.07	2.50	BC 8
			Links	Min N	▷ -2.87	-3.69	2.00	3.24	-2.26	-0.93	BC 15
				Max V_y	6.11	▷ 14.64	-2.67	-6.82	6.07	2.50	BC 8
				Min V_y	-2.87	▷ -3.69	2.00	3.24	-2.26	-0.93	BC 15
				Max V_z	-1.50	-1.71	▷ 3.98	3.80	-3.39	-1.22	BC 23
				Min V_z	4.80	12.14	▷ -3.21	-6.17	5.63	2.13	BC 6
				Max M_T	-1.50	-1.71	3.98	▷ 3.80	-3.39	-1.22	BC 23
				Min M_T	5.74	14.14	-3.16	▷ -6.94	6.35	2.59	BC 12
				Max M_y	5.22	13.87	-3.12	-6.75	▷ 6.71	2.83	BC 13
				Min M_y	-0.43	-1.13	3.91	3.44	▷ -4.11	-1.69	BC 22
				Max M_z	5.22	13.87	-3.12	-6.75	6.71	▷ 2.83	BC 13
				Min M_z	-0.43	-1.13	3.91	3.44	-4.11	▷ -1.69	BC 22
			0.000	Max N	▷ 6.11	14.64	-2.67	-6.82	6.07	2.50	BC 8
			Rechts	Min N	▷ -2.87	-3.69	2.00	3.24	-2.26	-0.93	BC 15
				Max V_y	6.11	▷ 14.64	-2.67	-6.82	6.07	2.50	BC 8
				Min V_y	-2.87	▷ -3.69	2.00	3.24	-2.26	-0.93	BC 15
				Max V_z	-1.50	-1.71	▷ 3.98	3.80	-3.39	-1.22	BC 23
				Min V_z	4.80	12.14	▷ -3.21	-6.17	5.63	2.13	BC 6
				Max M_T	-1.50	-1.71	3.98	▷ 3.80	-3.39	-1.22	BC 23
				Min M_T	5.74	14.14	-3.16	▷ -6.94	6.35	2.59	BC 12
				Max M_y	5.22	13.87	-3.12	-6.75	▷ 6.71	2.83	BC 13
				Min M_y	-0.43	-1.13	3.91	3.44	▷ -4.11	-1.69	BC 22
				Max M_z	5.22	13.87	-3.12	-6.75	6.71	▷ 2.83	BC 13
				Min M_z	-0.43	-1.13	3.91	3.44	-4.11	▷ -1.69	BC 22
			0.583	Max N	▷ 6.27	14.18	-3.34	-6.86	4.37	-5.91	BC 8
			Links	Min N	▷ -2.80	-3.77	2.11	3.23	-1.09	1.24	BC 15
				Max V_y	6.27	▷ 14.18	-3.34	-6.86	4.37	-5.91	BC 8
				Min V_y	-2.80	▷ -3.77	2.11	3.23	-1.09	1.24	BC 15
				Max V_z	-1.43	-1.80	▷ 4.08	3.79	-1.07	-0.20	BC 23
				Min V_z	4.93	11.52	▷ -3.84	-6.23	3.63	-4.77	BC 6
				Max M_T	-1.43	-1.80	4.08	▷ 3.79	-1.07	-0.20	BC 23
				Min M_T	5.90	13.68	-3.83	▷ -6.99	4.37	-5.53	BC 12
				Max M_y	5.44	13.44	-3.31	-6.63	▷ 4.84	-5.10	BC 11
				Min M_y	-1.75	-3.63	2.04	2.87	▷ -1.86	0.56	BC 14
				Max M_z	-2.80	-3.77	2.11	3.23	-1.09	▷ 1.24	BC 15
				Min M_z	6.27	14.18	-3.34	-6.86	4.37	▷ -5.91	BC 8
			0.583	Max N	▷ 6.27	14.18	-3.34	-6.86	4.37	-5.91	BC 8
			Rechts	Min N	▷ -2.80	-3.77	2.11	3.23	-1.09	1.24	BC 15

4.12 DOORSNEDES - SNEDEKRACHTEN

Resultaatcombinaties

Staaf No.	RC	Knoop No.	Snede x [m]		Krachten [kN] N	V_y	V_z	Momenten [kNm] M_T	M_y	M_z	Bijbehorend Belastingsgeval
79	RC1			Max V_y	6.27	▷ 14.18	-3.34	-6.86	4.37	-5.91	BC 8
				Min V_y	-2.80	▷ -3.77	2.11	3.23	-1.09	1.24	BC 15
				Max V_z	-1.43	-1.80	▷ 4.08	3.79	-1.07	-0.20	BC 23
				Min V_z	4.93	11.52	▷ -3.84	-6.23	3.63	-4.77	BC 6
				Max M_T	-1.43	-1.80	4.08	▷ 3.79	-1.07	-0.20	BC 23
				Min M_T	5.90	13.68	-3.83	▷ -6.99	4.37	-5.53	BC 12
				Max M_y	5.44	13.44	-3.31	-6.63	▷ 4.84	-5.10	BC 11
				Min M_y	-1.75	-3.63	2.04	2.87	▷ -1.86	0.56	BC 14
				Max M_z	-2.80	-3.77	2.11	3.23	-1.09	▷ 1.24	BC 15
				Min M_z	6.27	14.18	-3.34	-6.86	4.37	▷ -5.91	BC 8
			0.645	Max N	▷ 6.30	14.11	-3.46	-6.87	4.16	-6.79	BC 8
			Links	Min N	▷ -2.79	-3.78	2.15	3.23	-0.96	1.48	BC 15
				Max V_y	6.30	▷ 14.11	-3.46	-6.87	4.16	-6.79	BC 8
				Min V_y	-2.79	▷ -3.78	2.15	3.23	-0.96	1.48	BC 15
				Max V_z	-1.42	-1.81	▷ 4.12	3.78	-0.81	-0.08	BC 23
				Min V_z	5.93	13.61	▷ -3.95	-7.00	4.13	-6.38	BC 12
				Max M_T	-1.42	-1.81	4.12	▷ 3.78	-0.81	-0.08	BC 23
				Min M_T	5.93	13.61	-3.95	▷ -7.00	4.13	-6.38	BC 12
				Max M_y	5.47	13.39	-3.44	-6.63	▷ 4.63	-5.94	BC 11
				Min M_y	-1.75	-3.69	2.08	2.87	▷ -1.73	0.79	BC 14
				Max M_z	-2.79	-3.78	2.15	3.23	-0.96	▷ 1.48	BC 15
				Min M_z	6.30	14.11	-3.46	-6.87	4.16	▷ -6.79	BC 8
			0.645	Max N	▷ 6.30	14.11	-3.46	-6.87	4.16	-6.79	BC 8
			Rechts	Min N	▷ -2.79	-3.78	2.15	3.23	-0.96	1.48	BC 15
				Max V_y	6.30	▷ 14.11	-3.46	-6.87	4.16	-6.79	BC 8
				Min V_y	-2.79	▷ -3.78	2.15	3.23	-0.96	1.48	BC 15
				Max V_z	-1.42	-1.81	▷ 4.12	3.78	-0.81	-0.08	BC 23
				Min V_z	5.93	13.61	▷ -3.95	-7.00	4.13	-6.38	BC 12
				Max M_T	-1.42	-1.81	4.12	▷ 3.78	-0.81	-0.08	BC 23
				Min M_T	5.93	13.61	-3.95	▷ -7.00	4.13	-6.38	BC 12
				Max M_y	5.47	13.39	-3.44	-6.63	▷ 4.63	-5.94	BC 11
				Min M_y	-1.75	-3.69	2.08	2.87	▷ -1.73	0.79	BC 14
				Max M_z	-2.79	-3.78	2.15	3.23	-0.96	▷ 1.48	BC 15
				Min M_z	6.30	14.11	-3.46	-6.87	4.16	▷ -6.79	BC 8
			1.290	Max N	▷ 6.46	13.61	-4.21	-6.91	1.62	-15.71	BC 8
			Links	Min N	▷ -2.71	-3.87	2.24	3.22	0.49	3.95	BC 15
				Max V_y	5.96	▷ 13.80	-4.17	-6.71	2.03	-15.42	BC 9
				Min V_y	-1.68	▷ -4.25	2.17	2.87	-0.33	3.35	BC 14
				Max V_z	-1.35	-1.89	▷ 4.22	3.76	1.91	1.11	BC 23
				Min V_z	6.09	13.11	▷ -4.71	-7.06	1.27	-14.97	BC 12
				Max M_T	-1.35	-1.89	4.22	▷ 3.76	1.91	1.11	BC 23
				Min M_T	6.09	13.11	-4.71	▷ -7.06	1.27	-14.97	BC 12
				Max M_y	4.17	10.78	-3.62	-5.53	▷ 2.22	-11.60	BC 5
				Min M_y	-1.68	-4.25	2.17	2.87	▷ -0.33	3.35	BC 14
				Max M_z	-2.71	-3.87	2.24	3.22	0.49	▷ 3.95	BC 15
				Min M_z	6.46	13.61	-4.21	-6.91	1.62	▷ -15.71	BC 8
		8	1.290	Max N	▷ 6.46	13.61	-4.21	-6.91	1.62	-15.71	BC 8
			Rechts	Min N	▷ -2.71	-3.87	2.24	3.22	0.49	3.95	BC 15
				Max V_y	5.96	▷ 13.80	-4.17	-6.71	2.03	-15.42	BC 9
				Min V_y	-1.68	▷ -4.25	2.17	2.87	-0.33	3.35	BC 14
				Max V_z	-1.35	-1.89	▷ 4.22	3.76	1.91	1.11	BC 23
				Min V_z	6.09	13.11	▷ -4.71	-7.06	1.27	-14.97	BC 12
				Max M_T	-1.35	-1.89	4.22	▷ 3.76	1.91	1.11	BC 23
				Min M_T	6.09	13.11	-4.71	▷ -7.06	1.27	-14.97	BC 12
				Max M_y	4.17	10.78	-3.62	-5.53	▷ 2.22	-11.60	BC 5
				Min M_y	-1.68	-4.25	2.17	2.87	▷ -0.33	3.35	BC 14
				Max M_z	-2.71	-3.87	2.24	3.22	0.49	▷ 3.95	BC 15
				Min M_z	6.46	13.61	-4.21	-6.91	1.62	▷ -15.71	BC 8
80	RC1	28	0.000	Max N	▷ 7.18	-1.01	12.38	0.69	-15.39	0.85	BC 2
			Links	Min N	▷ -10.33	1.25	-4.14	-0.42	2.71	1.90	BC 21
				Max V_y	-10.33	▷ 1.25	-4.14	-0.42	2.71	1.90	BC 21
				Min V_y	2.33	▷ -1.10	0.39	-0.21	2.94	-0.08	BC 22
				Max V_z	5.57	-0.54	▷ 14.03	0.47	-17.18	1.67	BC 8
				Min V_z	-3.20	-0.07	▷ -4.60	-0.11	4.53	-0.73	BC 15
				Max M_T	6.17	-1.02	10.17	▷ 1.01	-15.14	-0.07	BC 6
				Min M_T	-1.26	-0.07	-0.16	▷ -0.70	4.00	1.11	BC 23
				Max M_y	-3.20	-0.07	-4.60	-0.11	▷ 4.53	-0.73	BC 15
				Min M_y	5.57	-0.54	14.03	0.47	▷ -17.18	1.67	BC 8
				Max M_z	-1.70	0.63	8.72	-0.05	-11.54	▷ 2.75	BC 5
				Min M_z	0.38	-1.10	-4.05	0.39	3.48	▷ -1.91	BC 14
			0.000	Max N	▷ 7.18	-1.01	12.38	0.69	-15.39	0.85	BC 2
			Rechts	Min N	▷ -10.33	1.25	-4.14	-0.42	2.71	1.90	BC 21
				Max V_y	-10.33	▷ 1.25	-4.14	-0.42	2.71	1.90	BC 21
				Min V_y	2.33	▷ -1.10	0.39	-0.21	2.94	-0.08	BC 22
				Max V_z	5.57	-0.54	▷ 14.03	0.47	-17.18	1.67	BC 8
				Min V_z	-3.20	-0.07	▷ -4.60	-0.11	4.53	-0.73	BC 15
				Max M_T	6.17	-1.02	10.17	▷ 1.01	-15.14	-0.07	BC 6
				Min M_T	-1.26	-0.07	-0.16	▷ -0.70	4.00	1.11	BC 23
				Max M_y	-3.20	-0.07	-4.60	-0.11	▷ 4.53	-0.73	BC 15
				Min M_y	5.57	-0.54	14.03	0.47	▷ -17.18	1.67	BC 8
				Max M_z	-1.70	0.63	8.72	-0.05	-11.54	▷ 2.75	BC 5
				Min M_z	0.38	-1.10	-4.05	0.39	3.48	▷ -1.91	BC 14
			0.583	Max N	▷ 7.33	-1.21	11.68	0.70	-8.34	1.48	BC 2
			Links	Min N	▷ -10.28	1.16	-4.04	-0.43	0.30	1.19	BC 21

4.12 DOORSNEDES - SNEDEKRACHTEN

Resultaatcombinaties

Staaf No.	RC	Knoop No.	Snede x [m]		Krachten [kN] N	V_y	V_z	Momenten [kNm] M_T	M_y	M_z	Bijbehorend Belastingsgeval
80	RC1			Max V_y	-10.28	▷ 1.16	-4.04	-0.43	0.30	1.19	BC 21
				Min V_y	6.33	▷ -1.22	9.63	1.00	-9.34	0.57	BC 6
				Max V_z	5.77	-0.81	▷ 13.27	0.48	-9.17	2.04	BC 8
				Min V_z	-3.16	-0.15	▷ -4.50	-0.11	1.85	-0.66	BC 15
				Max M_T	6.33	-1.22	9.63	▷ 1.00	-9.34	0.57	BC 6
				Min M_T	-1.22	-0.15	-0.38	▷ -0.70	3.85	1.18	BC 23
				Max M_y	-1.22	-0.15	-0.38	-0.70	▷ 3.85	1.18	BC 23
				Min M_y	5.26	-0.82	12.24	0.63	▷ -9.68	1.58	BC 12
				Max M_z	1.31	-0.00	11.52	0.11	-8.29	▷ 2.52	BC 11
				Min M_z	0.44	-1.17	-3.95	0.40	1.12	▷ -1.25	BC 14
			0.583	Max N	▷ 7.33	-1.21	11.68	0.70	-8.34	1.48	BC 2
			Rechts	Min N	▷ -10.28	1.16	-4.04	-0.43	0.30	1.19	BC 21
				Max V_y	-10.28	▷ 1.16	-4.04	-0.43	0.30	1.19	BC 21
				Min V_y	6.33	▷ -1.22	9.63	1.00	-9.34	0.57	BC 6
				Max V_z	5.77	-0.81	▷ 13.27	0.48	-9.17	2.04	BC 8
				Min V_z	-3.16	-0.15	▷ -4.50	-0.11	1.85	-0.66	BC 15
				Max M_T	6.33	-1.22	9.63	▷ 1.00	-9.34	0.57	BC 6
				Min M_T	-1.22	-0.15	-0.38	▷ -0.70	3.85	1.18	BC 23
				Max M_y	-1.22	-0.15	-0.38	-0.70	▷ 3.85	1.18	BC 23
				Min M_y	5.26	-0.82	12.24	0.63	▷ -9.68	1.58	BC 12
				Max M_z	1.31	-0.00	11.52	0.11	-8.29	▷ 2.52	BC 11
				Min M_z	0.44	-1.17	-3.95	0.40	1.12	▷ -1.25	BC 14
			0.645	Max N	▷ 7.36	-1.25	11.56	0.70	-7.61	1.56	BC 2
			Links	Min N	▷ -10.28	1.15	-4.01	-0.43	0.05	1.12	BC 21
				Max V_y	-10.28	▷ 1.15	-4.01	-0.43	0.05	1.12	BC 21
				Min V_y	6.35	▷ -1.26	9.54	1.00	-8.74	0.65	BC 6
				Max V_z	5.80	-0.86	▷ 13.13	0.48	-8.35	2.09	BC 8
				Min V_z	-3.15	-0.16	▷ -4.47	-0.11	1.57	-0.65	BC 15
				Max M_T	6.35	-1.26	9.54	▷ 1.00	-8.74	0.65	BC 6
				Min M_T	-1.21	-0.16	-0.40	▷ -0.70	3.82	1.19	BC 23
				Max M_y	-1.21	-0.16	-0.40	-0.70	▷ 3.82	1.19	BC 23
				Min M_y	5.30	-0.87	12.12	0.63	▷ -8.92	1.64	BC 12
				Max M_z	1.34	-0.05	11.40	0.11	-7.58	▷ 2.52	BC 11
				Min M_z	0.45	-1.18	-3.92	0.40	0.88	▷ -1.18	BC 14
			0.645	Max N	▷ 7.36	-1.25	11.56	0.70	-7.61	1.56	BC 2
			Rechts	Min N	▷ -10.28	1.15	-4.01	-0.43	0.05	1.12	BC 21
				Max V_y	-10.28	▷ 1.15	-4.01	-0.43	0.05	1.12	BC 21
				Min V_y	6.35	▷ -1.26	9.54	1.00	-8.74	0.65	BC 6
				Max V_z	5.80	-0.86	▷ 13.13	0.48	-8.35	2.09	BC 8
				Min V_z	-3.15	-0.16	▷ -4.47	-0.11	1.57	-0.65	BC 15
				Max M_T	6.35	-1.26	9.54	▷ 1.00	-8.74	0.65	BC 6
				Min M_T	-1.21	-0.16	-0.40	▷ -0.70	3.82	1.19	BC 23
				Max M_y	-1.21	-0.16	-0.40	-0.70	▷ 3.82	1.19	BC 23
				Min M_y	5.30	-0.87	12.12	0.63	▷ -8.92	1.64	BC 12
				Max M_z	1.34	-0.05	11.40	0.11	-7.58	▷ 2.52	BC 11
				Min M_z	0.45	-1.18	-3.92	0.40	0.88	▷ -1.18	BC 14
			1.290	Max N	▷ 7.52	-1.49	10.79	0.71	-0.46	2.46	BC 2
			Links	Min N	▷ -10.23	1.06	-3.92	-0.43	-2.48	0.41	BC 21
				Max V_y	-10.23	▷ 1.06	-3.92	-0.43	-2.48	0.41	BC 21
				Min V_y	6.52	▷ -1.49	8.93	1.00	-2.83	1.55	BC 6
				Max V_z	6.02	-1.18	▷ 12.27	0.49	-0.23	2.78	BC 8
				Min V_z	-3.10	-0.26	▷ -4.38	-0.11	-1.25	-0.52	BC 15
				Max M_T	6.52	-1.49	8.93	▷ 1.00	-2.83	1.55	BC 6
				Min M_T	-1.16	-0.26	-0.63	▷ -0.70	3.48	1.32	BC 23
				Max M_y	-1.16	-0.26	-0.63	-0.70	▷ 3.48	1.32	BC 23
				Min M_y	5.11	-1.22	4.14	0.94	▷ -3.07	0.53	BC 18
				Max M_z	6.02	-1.18	12.27	0.49	-0.23	▷ 2.78	BC 8
				Min M_z	-3.10	-0.26	-4.38	-0.11	-1.25	▷ -0.52	BC 15
		29	1.290	Max N	▷ 7.52	-1.49	10.79	0.71	-0.46	2.46	BC 2
			Rechts	Min N	▷ -10.23	1.06	-3.92	-0.43	-2.48	0.41	BC 21
				Max V_y	-10.23	▷ 1.06	-3.92	-0.43	-2.48	0.41	BC 21
				Min V_y	6.52	▷ -1.49	8.93	1.00	-2.83	1.55	BC 6
				Max V_z	6.02	-1.18	▷ 12.27	0.49	-0.23	2.78	BC 8
				Min V_z	-3.10	-0.26	▷ -4.38	-0.11	-1.25	-0.52	BC 15
				Max M_T	6.52	-1.49	8.93	▷ 1.00	-2.83	1.55	BC 6
				Min M_T	-1.16	-0.26	-0.63	▷ -0.70	3.48	1.32	BC 23
				Max M_y	-1.16	-0.26	-0.63	-0.70	▷ 3.48	1.32	BC 23
				Min M_y	5.11	-1.22	4.14	0.94	▷ -3.07	0.53	BC 18
				Max M_z	6.02	-1.18	12.27	0.49	-0.23	▷ 2.78	BC 8
				Min M_z	-3.10	-0.26	-4.38	-0.11	-1.25	▷ -0.52	BC 15
81	RC1	29	0.000	Max N	▷ 7.87	-0.25	5.57	-2.09	-0.74	2.37	BC 2
			Links	Min N	▷ -10.42	1.05	-1.14	1.16	-2.29	0.73	BC 21
				Max V_y	-10.42	▷ 1.05	-1.14	1.16	-2.29	0.73	BC 21
				Min V_y	0.83	▷ -0.68	-1.15	1.72	-1.46	-0.88	BC 14
				Max V_z	6.57	0.04	▷ 6.16	-2.74	-0.55	2.68	BC 8
				Min V_z	-2.95	-0.05	▷ -1.64	1.34	-1.11	-0.79	BC 15
				Max M_T	0.83	-0.68	-1.15	▷ 1.72	-1.46	-0.88	BC 14
				Min M_T	4.67	0.35	5.91	▷ -2.93	-0.37	2.73	BC 9
				Max M_y	-1.08	0.20	-1.20	-0.89	▷ 3.44	1.11	BC 23
				Min M_y	5.18	-0.44	3.19	0.33	▷ -3.13	0.47	BC 18
				Max M_z	1.98	0.57	5.37	-2.57	-0.80	▷ 2.77	BC 11
				Min M_z	0.83	-0.68	-1.15	1.72	-1.46	▷ -0.88	BC 14
			0.000	Max N	▷ 7.87	-0.25	5.57	-2.09	-0.74	2.37	BC 2
			Rechts	Min N	▷ -10.42	1.05	-1.14	1.16	-2.29	0.73	BC 21

4.12 DOORSNEDES - SNEDEKRACHTEN

Resultaatcombinaties

Staaf No.	RC	Knoop No.	Snede x [m]		Krachten [kN] N	V_y	V_z	Momenten [kNm] M_T	M_y	M_z	Bijbehorend Belastingsgeval
81	RC1			Max V_y	-10.42	1.05	-1.14	1.16	-2.29	0.73	BC 21
				Min V_y	0.83	-0.68	-1.15	1.72	-1.46	-0.88	BC 14
				Max V_z	6.57	0.04	6.16	-2.74	-0.55	2.68	BC 8
				Min V_z	-2.95	-0.05	-1.64	1.34	-1.11	-0.79	BC 15
				Max M_T	0.83	-0.68	-1.15	1.72	-1.46	-0.88	BC 14
				Min M_T	4.67	0.35	5.91	-2.93	-0.37	2.73	BC 9
				Max M_y	-1.08	0.20	-1.20	-0.89	3.44	1.11	BC 23
				Min M_y	5.18	-0.44	3.19	0.33	-3.13	0.47	BC 18
				Max M_z	1.98	0.57	5.37	-2.57	-0.80	2.77	BC 11
				Min M_z	0.83	-0.68	-1.15	1.72	-1.46	-0.88	BC 14
			0.583	Max N	8.01	-0.46	4.90	-2.09	2.35	2.57	BC 2
			Links	Min N	-10.38	0.96	-1.04	1.15	-2.95	0.14	BC 21
				Max V_y	-10.38	0.96	-1.04	1.15	-2.95	0.14	BC 21
				Min V_y	0.88	-0.75	-1.05	1.72	-2.13	-0.46	BC 14
				Max V_z	6.74	-0.23	5.44	-2.73	2.88	2.72	BC 8
				Min V_z	-2.91	-0.14	-1.54	1.34	-2.06	-0.74	BC 15
				Max M_T	0.88	-0.75	-1.05	1.72	-2.13	-0.46	BC 14
				Min M_T	4.84	0.08	5.19	-2.92	2.92	2.59	BC 9
				Max M_y	4.84	0.08	5.19	-2.92	2.92	2.59	BC 9
				Min M_y	-6.58	0.35	-0.55	1.53	-3.01	0.42	BC 20
				Max M_z	6.74	-0.23	5.44	-2.73	2.88	2.72	BC 8
				Min M_z	-2.91	-0.14	-1.54	1.34	-2.06	-0.74	BC 15
			0.583	Max N	8.01	-0.46	4.90	-2.09	2.35	2.57	BC 2
			Rechts	Min N	-10.38	0.96	-1.04	1.15	-2.95	0.14	BC 21
				Max V_y	-10.38	0.96	-1.04	1.15	-2.95	0.14	BC 21
				Min V_y	0.88	-0.75	-1.05	1.72	-2.13	-0.46	BC 14
				Max V_z	6.74	-0.23	5.44	-2.73	2.88	2.72	BC 8
				Min V_z	-2.91	-0.14	-1.54	1.34	-2.06	-0.74	BC 15
				Max M_T	0.88	-0.75	-1.05	1.72	-2.13	-0.46	BC 14
				Min M_T	4.84	0.08	5.19	-2.92	2.92	2.59	BC 9
				Max M_y	4.84	0.08	5.19	-2.92	2.92	2.59	BC 9
				Min M_y	-6.58	0.35	-0.55	1.53	-3.01	0.42	BC 20
				Max M_z	6.74	-0.23	5.44	-2.73	2.88	2.72	BC 8
				Min M_z	-2.91	-0.14	-1.54	1.34	-2.06	-0.74	BC 15
			0.645	Max N	8.03	-0.49	4.78	-2.09	2.66	2.60	BC 2
			Links	Min N	-10.38	0.95	-1.00	1.15	-3.02	0.08	BC 21
				Max V_y	-10.38	0.95	-1.00	1.15	-3.02	0.08	BC 21
				Min V_y	0.89	-0.76	-1.02	1.72	-2.19	-0.42	BC 14
				Max V_z	6.77	-0.27	5.30	-2.73	3.22	2.74	BC 8
				Min V_z	-2.91	-0.15	-1.51	1.34	-2.16	-0.73	BC 15
				Max M_T	0.89	-0.76	-1.02	1.72	-2.19	-0.42	BC 14
				Min M_T	4.87	0.03	5.06	-2.92	3.24	2.59	BC 9
				Max M_y	4.87	0.03	5.06	-2.92	3.24	2.59	BC 9
				Min M_y	-6.57	0.34	-0.51	1.53	-3.05	0.40	BC 20
				Max M_z	6.77	-0.27	5.30	-2.73	3.22	2.74	BC 8
				Min M_z	-2.91	-0.15	-1.51	1.34	-2.16	-0.73	BC 15
			0.645	Max N	8.03	-0.49	4.78	-2.09	2.66	2.60	BC 2
			Rechts	Min N	-10.38	0.95	-1.00	1.15	-3.02	0.08	BC 21
				Max V_y	-10.38	0.95	-1.00	1.15	-3.02	0.08	BC 21
				Min V_y	0.89	-0.76	-1.02	1.72	-2.19	-0.42	BC 14
				Max V_z	6.77	-0.27	5.30	-2.73	3.22	2.74	BC 8
				Min V_z	-2.91	-0.15	-1.51	1.34	-2.16	-0.73	BC 15
				Max M_T	0.89	-0.76	-1.02	1.72	-2.19	-0.42	BC 14
				Min M_T	4.87	0.03	5.06	-2.92	3.24	2.59	BC 9
				Max M_y	4.87	0.03	5.06	-2.92	3.24	2.59	BC 9
				Min M_y	-6.57	0.34	-0.51	1.53	-3.05	0.40	BC 20
				Max M_z	6.77	-0.27	5.30	-2.73	3.22	2.74	BC 8
				Min M_z	-2.91	-0.15	-1.51	1.34	-2.16	-0.73	BC 15
			1.290	Max N	8.18	-0.73	4.05	-2.08	5.45	3.00	BC 2
			Links	Min N	-10.33	0.85	-0.91	1.15	-3.60	-0.50	BC 21
				Max V_y	-10.33	0.85	-0.91	1.15	-3.60	-0.50	BC 21
				Min V_y	7.25	-0.84	4.16	-1.00	3.11	2.21	BC 6
				Max V_z	6.50	-0.64	4.54	-2.18	5.13	2.64	BC 12
				Min V_z	-0.98	0.00	-1.67	-0.90	1.59	0.98	BC 23
				Max M_T	0.95	-0.84	-0.93	1.72	-2.79	0.10	BC 14
				Min M_T	5.06	-0.28	4.24	-2.91	6.17	2.69	BC 9
				Max M_y	6.96	-0.58	4.49	-2.72	6.31	3.04	BC 8
				Min M_y	-10.33	0.85	-0.91	1.15	-3.60	-0.50	BC 21
				Max M_z	6.96	-0.58	4.49	-2.72	6.31	3.04	BC 8
				Min M_z	-2.86	-0.25	-1.42	1.34	-3.07	-0.60	BC 15
		30	1.290	Max N	8.18	-0.73	4.05	-2.08	5.45	3.00	BC 2
			Rechts	Min N	-10.33	0.85	-0.91	1.15	-3.60	-0.50	BC 21
				Max V_y	-10.33	0.85	-0.91	1.15	-3.60	-0.50	BC 21
				Min V_y	7.25	-0.84	4.16	-1.00	3.11	2.21	BC 6
				Max V_z	6.50	-0.64	4.54	-2.18	5.13	2.64	BC 12
				Min V_z	-0.98	0.00	-1.67	-0.90	1.59	0.98	BC 23
				Max M_T	0.95	-0.84	-0.93	1.72	-2.79	0.10	BC 14
				Min M_T	5.06	-0.28	4.24	-2.91	6.17	2.69	BC 9
				Max M_y	6.96	-0.58	4.49	-2.72	6.31	3.04	BC 8
				Min M_y	-10.33	0.85	-0.91	1.15	-3.60	-0.50	BC 21
				Max M_z	6.96	-0.58	4.49	-2.72	6.31	3.04	BC 8
				Min M_z	-2.86	-0.25	-1.42	1.34	-3.07	-0.60	BC 15
82	RC1	30	0.000	Max N	7.54	9.13	-1.09	-5.16	5.22	3.16	BC 2
			Links	Min N	-10.66	2.28	1.90	2.81	-3.42	-0.17	BC 21

4.12 DOORSNEDES - SNEDEKRACHTEN

Resultaatcombinaties

Staaf No.	RC	Knoop No.	Snede x [m]		Krachten [kN] N	V_y	V_z	Momenten [kNm] M_T	M_y	M_z	Bijbehorend Belastingsgeval
82	RC1			Max V_y	1.63	▷ 11.29	-1.17	-5.54	4.97	2.77	BC 11
				Min V_y	1.67	▷ -4.11	1.82	3.29	-2.67	-0.42	BC 14
				Max V_z	-6.71	2.25	▷ 2.34	3.12	-3.15	0.34	BC 20
				Min V_z	-0.90	-0.12	▷ -2.26	-1.20	1.58	0.86	BC 23
				Max M_T	1.67	-4.11	1.82	▷ 3.29	-2.67	-0.42	BC 14
				Min M_T	4.35	11.03	-1.66	▷ -6.40	5.93	2.96	BC 9
				Max M_y	6.33	11.02	-1.44	-6.25	▷ 6.06	3.21	BC 8
				Min M_y	-10.66	2.28	1.90	2.81	▷ -3.42	-0.17	BC 21
				Max M_z	6.33	11.02	-1.44	-6.25	6.06	▷ 3.21	BC 8
				Min M_z	-2.28	-4.07	1.37	2.99	-2.94	▷ -0.94	BC 15
			0.000	Max N	▷ 7.54	9.13	-1.09	-5.16	5.22	3.16	BC 2
			Rechts	Min N	▷ -10.66	2.28	1.90	2.81	-3.42	-0.17	BC 21
				Max V_y	1.63	▷ 11.29	-1.17	-5.54	4.97	2.77	BC 11
				Min V_y	1.67	▷ -4.11	1.82	3.29	-2.67	-0.42	BC 14
				Max V_z	-6.71	2.25	▷ 2.34	3.12	-3.15	0.34	BC 20
				Min V_z	-0.90	-0.12	▷ -2.26	-1.20	1.58	0.86	BC 23
				Max M_T	1.67	-4.11	1.82	▷ 3.29	-2.67	-0.42	BC 14
				Min M_T	4.35	11.03	-1.66	▷ -6.40	5.93	2.96	BC 9
				Max M_y	6.33	11.02	-1.44	-6.25	▷ 6.06	3.21	BC 8
				Min M_y	-10.66	2.28	1.90	2.81	▷ -3.42	-0.17	BC 21
				Max M_z	6.33	11.02	-1.44	-6.25	6.06	▷ 3.21	BC 8
				Min M_z	-2.28	-4.07	1.37	2.99	-2.94	▷ -0.94	BC 15
			0.583	Max N	▷ 7.67	8.94	-1.73	-5.19	4.45	-2.11	BC 2
			Links	Min N	▷ -10.62	2.19	2.00	2.82	-2.31	-1.48	BC 21
				Max V_y	1.79	▷ 11.04	-1.77	-5.58	4.16	-3.75	BC 11
				Min V_y	1.73	▷ -4.18	1.92	3.29	-1.60	1.99	BC 14
				Max V_z	-6.65	2.17	▷ 2.44	3.12	-1.78	-0.95	BC 20
				Min V_z	-0.86	-0.21	▷ -2.47	-1.20	0.21	0.95	BC 23
				Max M_T	1.73	-4.18	1.92	▷ 3.29	-1.60	1.99	BC 14
				Min M_T	4.51	10.79	-2.33	▷ -6.44	4.82	-3.41	BC 9
				Max M_y	6.50	10.78	-2.11	-6.29	▷ 5.08	-3.15	BC 8
				Min M_y	-10.62	2.19	2.00	2.82	▷ -2.31	-1.48	BC 21
				Max M_z	1.73	-4.18	1.92	3.29	-1.60	▷ 1.99	BC 14
				Min M_z	1.79	11.04	-1.77	-5.58	4.16	▷ -3.75	BC 11
			0.583	Max N	▷ 7.67	8.94	-1.73	-5.19	4.45	-2.11	BC 2
			Rechts	Min N	▷ -10.62	2.19	2.00	2.82	-2.31	-1.48	BC 21
				Max V_y	1.79	▷ 11.04	-1.77	-5.58	4.16	-3.75	BC 11
				Min V_y	1.73	▷ -4.18	1.92	3.29	-1.60	1.99	BC 14
				Max V_z	-6.65	2.17	▷ 2.44	3.12	-1.78	-0.95	BC 20
				Min V_z	-0.86	-0.21	▷ -2.47	-1.20	0.21	0.95	BC 23
				Max M_T	1.73	-4.18	1.92	▷ 3.29	-1.60	1.99	BC 14
				Min M_T	4.51	10.79	-2.33	▷ -6.44	4.82	-3.41	BC 9
				Max M_y	6.50	10.78	-2.11	-6.29	▷ 5.08	-3.15	BC 8
				Min M_y	-10.62	2.19	2.00	2.82	▷ -2.31	-1.48	BC 21
				Max M_z	1.73	-4.18	1.92	3.29	-1.60	▷ 1.99	BC 14
				Min M_z	1.79	11.04	-1.77	-5.58	4.16	▷ -3.75	BC 11
			0.645	Max N	▷ 7.69	8.91	-1.85	-5.19	4.33	-2.66	BC 2
			Links	Min N	▷ -10.61	2.18	2.03	2.82	-2.19	-1.61	BC 21
				Max V_y	1.82	▷ 10.99	-1.88	-5.58	4.04	-4.43	BC 11
				Min V_y	1.73	▷ -4.19	1.96	3.29	-1.48	2.25	BC 14
				Max V_z	-6.64	2.17	▷ 2.48	3.12	-1.63	-1.08	BC 20
				Min V_z	-0.85	-0.22	▷ -2.50	-1.20	0.05	0.97	BC 23
				Max M_T	1.73	-4.19	1.96	▷ 3.29	-1.48	2.25	BC 14
				Min M_T	4.54	10.74	-2.46	▷ -6.45	4.67	-4.08	BC 9
				Max M_y	6.53	10.73	-2.24	-6.29	▷ 4.94	-3.82	BC 8
				Min M_y	-10.61	2.18	2.03	2.82	▷ -2.19	-1.61	BC 21
				Max M_z	1.73	-4.19	1.96	3.29	-1.48	▷ 2.25	BC 14
				Min M_z	1.82	10.99	-1.88	-5.58	4.04	▷ -4.43	BC 11
			0.645	Max N	▷ 7.69	8.91	-1.85	-5.19	4.33	-2.66	BC 2
			Rechts	Min N	▷ -10.61	2.18	2.03	2.82	-2.19	-1.61	BC 21
				Max V_y	1.82	▷ 10.99	-1.88	-5.58	4.04	-4.43	BC 11
				Min V_y	1.73	▷ -4.19	1.96	3.29	-1.48	2.25	BC 14
				Max V_z	-6.64	2.17	▷ 2.48	3.12	-1.63	-1.08	BC 20
				Min V_z	-0.85	-0.22	▷ -2.50	-1.20	0.05	0.97	BC 23
				Max M_T	1.73	-4.19	1.96	▷ 3.29	-1.48	2.25	BC 14
				Min M_T	4.54	10.74	-2.46	▷ -6.45	4.67	-4.08	BC 9
				Max M_y	6.53	10.73	-2.24	-6.29	▷ 4.94	-3.82	BC 8
				Min M_y	-10.61	2.18	2.03	2.82	▷ -2.19	-1.61	BC 21
				Max M_z	1.73	-4.19	1.96	3.29	-1.48	▷ 2.25	BC 14
				Min M_z	1.82	10.99	-1.88	-5.58	4.04	▷ -4.43	BC 11
			1.290	Max N	▷ 7.83	8.70	-2.55	-5.22	2.86	-8.32	BC 2
			Links	Min N	▷ -10.56	2.08	2.12	2.82	-0.82	-2.99	BC 21
				Max V_y	3.98	▷ 10.71	-2.35	-5.47	2.97	-11.14	BC 10
				Min V_y	1.79	▷ -4.27	2.04	3.28	-0.16	4.98	BC 14
				Max V_z	-6.58	2.08	▷ 2.56	3.12	0.03	-2.45	BC 20
				Min V_z	4.71	10.46	▷ -3.22	-6.49	2.77	-10.89	BC 9
				Max M_T	1.79	-4.27	2.04	▷ 3.28	-0.16	4.98	BC 14
				Min M_T	4.71	10.46	-3.22	▷ -6.49	2.77	-10.89	BC 9
				Max M_y	6.37	9.49	-1.92	-5.26	▷ 3.33	-9.83	BC 12
				Min M_y	-0.81	-0.31	-2.73	-1.21	▷ -1.64	1.14	BC 23
				Max M_z	1.79	-4.27	2.04	3.28	-0.16	▷ 4.98	BC 14
				Min M_z	1.99	10.71	-2.57	-5.62	2.55	▷ -11.41	BC 11
		11	1.290	Max N	▷ 7.83	8.70	-2.55	-5.22	2.86	-8.32	BC 2
			Rechts	Min N	▷ -10.56	2.08	2.12	2.82	-0.82	-2.99	BC 21

4.12 DOORSNEDES - SNEDEKRACHTEN

Resultaatcombinaties

Staaf No.	RC	Knoop No.	Snede x [m]		Krachten [kN] N	V_y	V_z	Momenten [kNm] M_T	M_y	M_z	Bijbehorend Belastingsgeval
82	RC1			Max V_y	3.98	▷ 10.71	-2.35	-5.47	2.97	-11.14	BC 10
				Min V_y	1.79	▷ -4.27	2.04	3.28	-0.16	4.98	BC 14
				Max V_z	-6.58	2.08	▷ 2.56	3.12	0.03	-2.45	BC 20
				Min V_z	4.71	10.46	▷ -3.22	-6.49	2.77	-10.89	BC 9
				Max M_T	1.79	-4.27	2.04	▷ 3.28	-0.16	4.98	BC 14
				Min M_T	4.71	10.46	-3.22	▷ -6.49	2.77	-10.89	BC 9
				Max M_y	6.37	9.49	-1.92	-5.26	▷ 3.33	-9.83	BC 12
				Min M_y	-0.81	-0.31	-2.73	-1.21	▷ -1.64	1.14	BC 23
				Max M_z	1.79	-4.27	2.04	3.28	-0.16	▷ 4.98	BC 14
				Min M_z	1.99	10.71	-2.57	-5.62	2.55	▷ -11.41	BC 11
83	RC1	31	0.000	Max N	▷ 7.18	-1.01	-12.38	-0.69	15.39	0.85	BC 2
			Links	Min N	▷ -10.74	1.28	3.98	0.30	-2.90	1.75	BC 21
				Max V_y	-10.74	▷ 1.28	3.98	0.30	-2.90	1.75	BC 21
				Min V_y	0.38	▷ -1.10	4.05	-0.39	-3.48	-1.91	BC 14
				Max V_z	-3.64	-0.04	▷ 4.44	-0.03	-4.71	-0.88	BC 15
				Min V_z	5.57	-0.54	▷ -14.03	-0.47	17.18	1.67	BC 8
				Max M_T	-10.74	1.28	3.98	▷ 0.30	-2.90	1.75	BC 21
				Min M_T	1.91	-1.02	1.80	▷ -1.17	3.44	-2.58	BC 22
				Max M_y	5.57	-0.54	-14.03	-0.47	▷ 17.18	1.67	BC 8
				Min M_y	-3.64	-0.04	4.44	-0.03	▷ -4.71	-0.88	BC 15
				Max M_z	-2.14	0.66	-8.88	-0.09	11.37	▷ 2.60	BC 5
				Min M_z	1.91	-1.02	1.80	-1.17	3.44	▷ -2.58	BC 22
			0.000	Max N	▷ 7.18	-1.01	-12.38	-0.69	15.39	0.85	BC 2
			Rechts	Min N	▷ -10.74	1.28	3.98	0.30	-2.90	1.75	BC 21
				Max V_y	-10.74	▷ 1.28	3.98	0.30	-2.90	1.75	BC 21
				Min V_y	0.38	▷ -1.10	4.05	-0.39	-3.48	-1.91	BC 14
				Max V_z	-3.64	-0.04	▷ 4.44	-0.03	-4.71	-0.88	BC 15
				Min V_z	5.57	-0.54	▷ -14.03	-0.47	17.18	1.67	BC 8
				Max M_T	-10.74	1.28	3.98	▷ 0.30	-2.90	1.75	BC 21
				Min M_T	1.91	-1.02	1.80	▷ -1.17	3.44	-2.58	BC 22
				Max M_y	5.57	-0.54	-14.03	-0.47	▷ 17.18	1.67	BC 8
				Min M_y	-3.64	-0.04	4.44	-0.03	▷ -4.71	-0.88	BC 15
				Max M_z	-2.14	0.66	-8.88	-0.09	11.36	▷ 2.60	BC 5
				Min M_z	1.91	-1.02	1.80	-1.17	3.44	▷ -2.58	BC 22
			0.583	Max N	▷ 7.33	-1.21	-11.68	-0.70	8.34	1.48	BC 2
			Links	Min N	▷ -10.67	1.20	3.87	0.30	-0.58	1.03	BC 21
				Max V_y	-10.67	▷ 1.20	3.87	0.30	-0.58	1.03	BC 21
				Min V_y	6.60	▷ -1.26	-10.57	-0.33	5.55	1.83	BC 6
				Max V_z	-3.57	-0.12	▷ 4.34	-0.03	-2.13	-0.83	BC 15
				Min V_z	5.77	-0.81	▷ -13.27	-0.48	9.17	2.04	BC 8
				Max M_T	-10.67	1.20	3.87	▷ 0.30	-0.58	1.03	BC 21
				Min M_T	1.96	-1.10	1.70	▷ -1.17	4.48	-1.96	BC 22
				Max M_y	5.77	-0.81	-13.27	-0.48	▷ 9.17	2.04	BC 8
				Min M_y	-3.57	-0.12	4.34	-0.03	▷ -2.13	-0.83	BC 15
				Max M_z	1.10	0.02	-11.61	-0.18	8.16	▷ 2.44	BC 11
				Min M_z	1.96	-1.10	1.70	-1.17	4.48	▷ -1.96	BC 22
			0.583	Max N	▷ 7.33	-1.21	-11.68	-0.70	8.34	1.48	BC 2
			Rechts	Min N	▷ -10.67	1.20	3.87	0.30	-0.58	1.03	BC 21
				Max V_y	-10.67	▷ 1.20	3.87	0.30	-0.58	1.03	BC 21
				Min V_y	6.60	▷ -1.26	-10.57	-0.33	5.55	1.83	BC 6
				Max V_z	-3.57	-0.12	▷ 4.34	-0.03	-2.13	-0.83	BC 15
				Min V_z	5.77	-0.81	▷ -13.27	-0.48	9.17	2.04	BC 8
				Max M_T	-10.67	1.20	3.87	▷ 0.30	-0.58	1.03	BC 21
				Min M_T	1.96	-1.10	1.70	▷ -1.17	4.48	-1.96	BC 22
				Max M_y	5.77	-0.81	-13.27	-0.48	▷ 9.17	2.04	BC 8
				Min M_y	-3.57	-0.12	4.34	-0.03	▷ -2.13	-0.83	BC 15
				Max M_z	1.10	0.02	-11.61	-0.18	8.16	▷ 2.44	BC 11
				Min M_z	1.96	-1.10	1.70	-1.17	4.48	▷ -1.96	BC 22
			0.645	Max N	▷ 7.36	-1.25	-11.56	-0.70	7.61	1.56	BC 2
			Links	Min N	▷ -10.66	1.19	3.84	0.30	-0.34	0.95	BC 21
				Max V_y	-10.66	▷ 1.19	3.84	0.30	-0.34	0.95	BC 21
				Min V_y	6.63	▷ -1.30	-10.44	-0.33	4.89	1.91	BC 6
				Max V_z	-3.56	-0.13	▷ 4.30	-0.03	-1.86	-0.83	BC 15
				Min V_z	5.80	-0.86	▷ -13.13	-0.48	8.35	2.09	BC 8
				Max M_T	-10.66	1.19	3.84	▷ 0.30	-0.34	0.95	BC 21
				Min M_T	1.97	-1.10	1.66	▷ -1.17	4.59	-1.89	BC 22
				Max M_y	5.80	-0.86	-13.13	-0.48	▷ 8.35	2.09	BC 8
				Min M_y	-3.56	-0.13	4.30	-0.03	▷ -1.86	-0.83	BC 15
				Max M_z	3.43	-0.36	-12.38	-0.11	6.50	▷ 2.45	BC 13
				Min M_z	1.97	-1.10	1.66	-1.17	4.59	▷ -1.89	BC 22
			0.645	Max N	▷ 7.36	-1.25	-11.56	-0.70	7.61	1.56	BC 2
			Rechts	Min N	▷ -10.66	1.19	3.84	0.30	-0.34	0.95	BC 21
				Max V_y	-10.66	▷ 1.19	3.84	0.30	-0.34	0.95	BC 21
				Min V_y	6.63	▷ -1.30	-10.44	-0.33	4.89	1.91	BC 6
				Max V_z	-3.56	-0.13	▷ 4.30	-0.03	-1.86	-0.83	BC 15
				Min V_z	5.80	-0.86	▷ -13.13	-0.48	8.35	2.09	BC 8
				Max M_T	-10.66	1.19	3.84	▷ 0.30	-0.34	0.95	BC 21
				Min M_T	1.97	-1.10	1.66	▷ -1.17	4.59	-1.89	BC 22
				Max M_y	5.80	-0.86	-13.13	-0.48	▷ 8.35	2.09	BC 8
				Min M_y	-3.56	-0.13	4.30	-0.03	▷ -1.86	-0.83	BC 15
				Max M_z	3.43	-0.36	-12.38	-0.11	6.50	▷ 2.45	BC 13
				Min M_z	1.97	-1.10	1.66	-1.17	4.59	▷ -1.89	BC 22
			1.290	Max N	▷ 7.52	-1.49	-10.79	-0.71	0.46	2.46	BC 2
			Links	Min N	▷ -10.59	1.10	3.74	0.30	2.07	0.22	BC 21

■ 4.12 DOORSNEDES - SNEDEKRACHTEN

Resultaatcombinaties

Staaf No.	RC	Knoop No.	Snede x [m]		Krachten [kN] N	V_y	V_z	Momenten [kNm] M_T	M_y	M_z	Bijbehorend Belastingsgeval
83	RC1			Max V_y	-10.59	▷ 1.10	3.74	0.30	2.07	0.22	BC 21
				Min V_y	6.79	▷ -1.54	-9.68	-0.35	-1.54	2.84	BC 6
				Max V_z	-3.48	-0.22	▷ 4.21	-0.03	0.86	-0.71	BC 15
				Min V_z	6.02	-1.18	▷ -12.27	-0.49	0.23	2.78	BC 8
				Max M_T	-10.59	1.10	3.74	▷ 0.30	2.07	0.22	BC 21
				Min M_T	2.03	-1.18	1.58	▷ -1.17	5.60	-1.15	BC 22
				Max M_y	2.03	-1.18	1.58	-1.17	▷ 5.60	-1.15	BC 22
				Min M_y	2.79	-0.49	-9.31	0.02	▷ -2.27	2.52	BC 7
				Max M_z	5.65	-1.21	-11.71	-0.31	-0.77	▷ 2.97	BC 12
				Min M_z	-1.96	-0.15	1.96	-0.80	4.87	▷ -1.48	BC 23
		32	1.290	Max N	▷ 7.52	-1.49	-10.79	-0.71	0.46	2.46	BC 2
			Rechts	Min N	▷ -10.59	1.10	3.74	0.30	2.07	0.22	BC 21
				Max V_y	-10.59	▷ 1.10	3.74	0.30	2.07	0.22	BC 21
				Min V_y	6.79	▷ -1.54	-9.68	-0.35	-1.54	2.84	BC 6
				Max V_z	-3.48	-0.22	▷ 4.21	-0.03	0.86	-0.71	BC 15
				Min V_z	6.02	-1.18	▷ -12.27	-0.49	0.23	2.78	BC 8
				Max M_T	-10.59	1.10	3.74	▷ 0.30	2.07	0.22	BC 21
				Min M_T	2.03	-1.18	1.58	▷ -1.17	5.60	-1.15	BC 22
				Max M_y	2.03	-1.18	1.58	-1.17	▷ 5.60	-1.15	BC 22
				Min M_y	2.79	-0.49	-9.31	0.02	▷ -2.27	2.52	BC 7
				Max M_z	5.65	-1.21	-11.71	-0.31	-0.77	▷ 2.97	BC 12
				Min M_z	-1.96	-0.15	1.96	-0.80	4.87	▷ -1.48	BC 23
84	RC1	32	0.000	Max N	▷ 7.87	-0.25	-5.57	2.09	0.74	2.37	BC 2
			Links	Min N	▷ -10.67	1.01	0.91	-1.29	1.89	0.59	BC 21
				Max V_y	-10.67	▷ 1.01	0.91	-1.29	1.89	0.59	BC 21
				Min V_y	2.20	▷ -0.73	-1.07	-2.39	5.45	-1.39	BC 22
				Max V_z	-3.22	-0.09	▷ 1.41	-1.48	0.71	-0.93	BC 15
				Min V_z	6.57	0.04	▷ -6.16	2.74	0.55	2.68	BC 8
				Max M_T	4.20	0.34	-5.48	▷ 3.01	-0.83	2.79	BC 13
				Min M_T	2.20	-0.73	-1.07	▷ -2.39	5.45	-1.39	BC 22
				Max M_y	2.20	-0.73	-1.07	-2.39	▷ 5.45	-1.39	BC 22
				Min M_y	3.13	0.35	-4.21	2.64	▷ -2.00	2.59	BC 7
				Max M_z	6.22	0.05	-5.61	2.89	-0.46	▷ 2.82	BC 12
				Min M_z	-1.85	-0.15	-0.80	-2.15	4.70	▷ -1.45	BC 23
			0.000	Max N	▷ 7.87	-0.25	-5.57	2.09	0.74	2.37	BC 2
			Rechts	Min N	▷ -10.67	1.01	0.91	-1.29	1.89	0.59	BC 21
				Max V_y	-10.67	▷ 1.01	0.91	-1.29	1.89	0.59	BC 21
				Min V_y	2.20	▷ -0.73	-1.07	-2.39	5.45	-1.39	BC 22
				Max V_z	-3.22	-0.09	▷ 1.41	-1.48	0.71	-0.93	BC 15
				Min V_z	6.57	0.04	▷ -6.16	2.74	0.55	2.68	BC 8
				Max M_T	4.20	0.34	-5.48	▷ 3.01	-0.83	2.79	BC 13
				Min M_T	2.20	-0.73	-1.07	▷ -2.39	5.45	-1.39	BC 22
				Max M_y	2.20	-0.73	-1.07	-2.39	▷ 5.45	-1.39	BC 22
				Min M_y	3.13	0.35	-4.21	2.64	▷ -2.00	2.59	BC 7
				Max M_z	6.22	0.05	-5.61	2.89	-0.46	▷ 2.82	BC 12
				Min M_z	-1.85	-0.15	-0.80	-2.15	4.70	▷ -1.45	BC 23
			0.583	Max N	▷ 8.01	-0.46	-4.90	2.09	-2.35	2.57	BC 2
			Links	Min N	▷ -10.60	0.93	0.80	-1.29	2.41	0.03	BC 21
				Max V_y	-10.60	▷ 0.93	0.80	-1.29	2.41	0.03	BC 21
				Min V_y	2.25	▷ -0.80	-1.17	-2.39	4.82	-0.95	BC 22
				Max V_z	-3.15	-0.18	▷ 1.31	-1.48	1.53	-0.85	BC 15
				Min V_z	6.74	-0.23	▷ -5.44	2.73	-2.88	2.72	BC 8
				Max M_T	4.37	0.07	-4.76	▷ 3.00	-3.86	2.66	BC 13
				Min M_T	2.25	-0.80	-1.17	▷ -2.39	4.82	-0.95	BC 22
				Max M_y	2.25	-0.80	-1.17	-2.39	▷ 4.82	-0.95	BC 22
				Min M_y	3.28	0.14	-3.55	2.64	▷ -4.30	2.44	BC 7
				Max M_z	6.39	-0.22	-4.88	2.88	-3.56	▷ 2.85	BC 12
				Min M_z	-1.78	-0.23	-0.91	-2.15	4.22	▷ -1.34	BC 23
			0.583	Max N	▷ 8.01	-0.46	-4.90	2.09	-2.35	2.57	BC 2
			Rechts	Min N	▷ -10.60	0.93	0.80	-1.29	2.41	0.03	BC 21
				Max V_y	-10.60	▷ 0.93	0.80	-1.29	2.41	0.03	BC 21
				Min V_y	2.25	▷ -0.80	-1.17	-2.39	4.82	-0.95	BC 22
				Max V_z	-3.15	-0.18	▷ 1.31	-1.48	1.53	-0.85	BC 15
				Min V_z	6.74	-0.23	▷ -5.44	2.73	-2.88	2.72	BC 8
				Max M_T	4.37	0.07	-4.76	▷ 3.00	-3.86	2.66	BC 13
				Min M_T	2.25	-0.80	-1.17	▷ -2.39	4.82	-0.95	BC 22
				Max M_y	2.25	-0.80	-1.17	-2.39	▷ 4.82	-0.95	BC 22
				Min M_y	3.28	0.14	-3.55	2.64	▷ -4.30	2.44	BC 7
				Max M_z	6.39	-0.22	-4.88	2.88	-3.56	▷ 2.85	BC 12
				Min M_z	-1.78	-0.23	-0.91	-2.15	4.22	▷ -1.34	BC 23
			0.645	Max N	▷ 8.03	-0.49	-4.78	2.09	-2.66	2.60	BC 2
			Links	Min N	▷ -10.59	0.91	0.76	-1.29	2.46	-0.03	BC 21
				Max V_y	-10.59	▷ 0.91	0.76	-1.29	2.46	-0.03	BC 21
				Min V_y	2.26	▷ -0.81	-1.21	-2.39	4.75	-0.90	BC 22
				Max V_z	-3.14	-0.19	▷ 1.27	-1.48	1.61	-0.84	BC 15
				Min V_z	6.77	-0.27	▷ -5.30	2.73	-3.22	2.74	BC 8
				Max M_T	4.41	0.02	-4.63	▷ 3.00	-4.15	2.66	BC 13
				Min M_T	2.26	-0.81	-1.21	▷ -2.39	4.75	-0.90	BC 22
				Max M_y	2.26	-0.81	-1.21	-2.39	▷ 4.75	-0.90	BC 22
				Min M_y	3.31	0.10	-3.43	2.64	▷ -4.52	2.43	BC 7
				Max M_z	6.42	-0.26	-4.75	2.88	-3.86	▷ 2.87	BC 12
				Min M_z	-1.78	-0.24	-0.95	-2.15	4.17	▷ -1.33	BC 23
			0.645	Max N	▷ 8.03	-0.49	-4.78	2.09	-2.66	2.60	BC 2
			Rechts	Min N	▷ -10.59	0.91	0.76	-1.29	2.46	-0.03	BC 21

4.12 DOORSNEDES - SNEDEKRACHTEN

Resultaatcombinaties

Staaf No.	RC	Knoop No.	Snede x [m]		Krachten [kN] N	V_y	V_z	Momenten [kNm] M_T	M_y	M_z	Bijbehorend Belastingsgeval
84	RC1			Max V_y	-10.59	▷ 0.91	0.76	-1.29	2.46	-0.03	BC 21
				Min V_y	2.26	▷ -0.81	-1.21	-2.39	4.75	-0.90	BC 22
				Max V_z	-3.14	-0.19	▷ 1.27	-1.48	1.61	-0.84	BC 15
				Min V_z	6.77	-0.27	▷ -5.30	2.73	-3.22	2.74	BC 8
				Max M_T	4.41	0.02	-4.63	▷ 3.00	-4.15	2.66	BC 13
				Min M_T	2.26	-0.81	-1.21	▷ -2.39	4.75	-0.90	BC 22
				Max M_y	2.26	-0.81	-1.21	-2.39	▷ 4.75	-0.90	BC 22
				Min M_y	3.31	0.10	-3.43	2.64	▷ -4.52	2.43	BC 7
				Max M_z	6.42	-0.26	-4.75	2.88	-3.86	▷ 2.87	BC 12
				Min M_z	-1.78	-0.24	-0.95	-2.15	4.17	▷ -1.33	BC 23
			1.290	Max N	▷ 8.18	-0.73	-4.05	2.08	-5.45	3.00	BC 2
			Links	Min N	▷ -10.52	0.82	0.67	-1.29	2.89	-0.59	BC 21
				Max V_y	-10.52	▷ 0.82	0.67	-1.29	2.89	-0.59	BC 21
				Min V_y	2.32	▷ -0.89	-1.29	-2.38	3.91	-0.35	BC 22
				Max V_z	-3.07	-0.28	▷ 1.18	-1.48	2.36	-0.69	BC 15
				Min V_z	6.96	-0.58	▷ -4.49	2.72	-6.31	3.04	BC 8
				Max M_T	4.61	-0.29	-3.81	▷ 2.99	-6.81	2.77	BC 13
				Min M_T	2.32	-0.89	-1.29	▷ -2.38	3.91	-0.35	BC 22
				Max M_y	2.32	-0.89	-1.29	-2.38	▷ 3.91	-0.35	BC 22
				Min M_y	4.61	-0.29	-3.81	2.99	▷ -6.81	2.77	BC 13
				Max M_z	7.49	-0.70	-2.94	2.38	-6.02	▷ 3.25	BC 6
				Min M_z	-1.70	-0.33	-1.04	-2.14	3.49	▷ -1.14	BC 23
		33	1.290	Max N	▷ 8.18	-0.73	-4.05	2.08	-5.45	3.00	BC 2
			Rechts	Min N	▷ -10.52	0.82	0.67	-1.29	2.89	-0.59	BC 21
				Max V_y	-10.52	▷ 0.82	0.67	-1.29	2.89	-0.59	BC 21
				Min V_y	2.32	▷ -0.89	-1.29	-2.38	3.91	-0.35	BC 22
				Max V_z	-3.07	-0.28	▷ 1.18	-1.48	2.36	-0.69	BC 15
				Min V_z	6.96	-0.58	▷ -4.49	2.72	-6.31	3.04	BC 8
				Max M_T	4.61	-0.29	-3.81	▷ 2.99	-6.81	2.77	BC 13
				Min M_T	2.32	-0.89	-1.29	▷ -2.38	3.91	-0.35	BC 22
				Max M_y	2.32	-0.89	-1.29	-2.38	▷ 3.91	-0.35	BC 22
				Min M_y	4.61	-0.29	-3.81	2.99	▷ -6.81	2.77	BC 13
				Max M_z	7.49	-0.70	-2.94	2.38	-6.02	▷ 3.25	BC 6
				Min M_z	-1.70	-0.33	-1.04	-2.14	3.49	▷ -1.14	BC 23
85	RC1	33	0.000	Max N	▷ 7.54	9.13	1.09	5.16	-5.22	3.16	BC 2
			Links	Min N	▷ -10.86	3.47	-2.20	-2.98	2.71	-0.22	BC 21
				Max V_y	1.55	▷ 11.89	1.02	5.47	-5.32	2.74	BC 11
				Min V_y	1.67	▷ -4.11	-1.82	-3.29	2.67	-0.42	BC 14
				Max V_z	2.82	9.65	▷ 2.33	5.59	-6.25	2.74	BC 7
				Min V_z	2.76	-2.69	▷ -4.03	-3.91	3.80	-0.67	BC 22
				Max M_T	3.97	11.28	2.06	▷ 6.46	-6.57	3.01	BC 13
				Min M_T	2.76	-2.69	-4.03	▷ -3.91	3.80	-0.67	BC 22
				Max M_y	2.76	-2.69	-4.03	-3.91	▷ 3.80	-0.67	BC 22
				Min M_y	3.97	11.28	2.06	6.46	▷ -6.57	3.01	BC 13
				Max M_z	6.95	8.41	2.19	5.44	-5.81	▷ 3.32	BC 6
				Min M_z	-1.40	-1.51	-3.89	-3.77	3.37	▷ -1.24	BC 23
			0.000	Max N	▷ 7.54	9.13	1.09	5.16	-5.22	3.16	BC 2
			Rechts	Min N	▷ -10.86	3.47	-2.20	-2.98	2.71	-0.22	BC 21
				Max V_y	1.55	▷ 11.89	1.02	5.47	-5.32	2.74	BC 11
				Min V_y	1.67	▷ -4.11	-1.82	-3.29	2.67	-0.42	BC 14
				Max V_z	2.82	9.65	▷ 2.33	5.59	-6.25	2.74	BC 7
				Min V_z	2.76	-2.69	▷ -4.03	-3.91	3.80	-0.67	BC 22
				Max M_T	3.97	11.28	2.06	▷ 6.46	-6.57	3.01	BC 13
				Min M_T	2.76	-2.69	-4.03	▷ -3.91	3.80	-0.67	BC 22
				Max M_y	2.76	-2.69	-4.03	-3.91	▷ 3.80	-0.67	BC 22
				Min M_y	3.97	11.28	2.06	6.46	▷ -6.57	3.01	BC 13
				Max M_z	6.95	8.41	2.19	5.44	-5.81	▷ 3.32	BC 6
				Min M_z	-1.40	-1.51	-3.89	-3.77	3.37	▷ -1.24	BC 23
			0.583	Max N	▷ 7.67	8.94	1.73	5.19	-4.45	-2.11	BC 2
			Links	Min N	▷ -10.79	3.38	-2.31	-2.98	1.42	-2.22	BC 21
				Max V_y	1.72	▷ 11.64	1.62	5.50	-4.60	-4.13	BC 11
				Min V_y	1.73	▷ -4.18	-1.92	-3.29	1.60	1.99	BC 14
				Max V_z	2.96	9.45	▷ 2.96	5.63	-4.75	-2.83	BC 7
				Min V_z	2.82	-2.76	▷ -4.13	-3.88	1.45	0.92	BC 22
				Max M_T	4.14	11.03	2.73	▷ 6.51	-5.23	-3.51	BC 13
				Min M_T	2.82	-2.76	-4.13	▷ -3.88	1.45	0.92	BC 22
				Max M_y	-6.65	2.17	-2.44	-3.12	▷ 1.78	-0.95	BC 20
				Min M_y	4.44	11.39	2.18	6.36	▷ -5.26	-3.80	BC 9
				Max M_z	1.73	-4.18	-1.92	-3.29	1.60	▷ 1.99	BC 14
				Min M_z	1.72	11.64	1.62	5.50	-4.60	▷ -4.13	BC 11
			0.583	Max N	▷ 7.67	8.94	1.73	5.19	-4.45	-2.11	BC 2
			Rechts	Min N	▷ -10.79	3.38	-2.31	-2.98	1.42	-2.22	BC 21
				Max V_y	1.72	▷ 11.64	1.62	5.50	-4.60	-4.13	BC 11
				Min V_y	1.73	▷ -4.18	-1.92	-3.29	1.60	1.99	BC 14
				Max V_z	2.96	9.45	▷ 2.96	5.63	-4.75	-2.83	BC 7
				Min V_z	2.82	-2.76	▷ -4.13	-3.88	1.45	0.92	BC 22
				Max M_T	4.14	11.03	2.73	▷ 6.51	-5.23	-3.51	BC 13
				Min M_T	2.82	-2.76	-4.13	▷ -3.88	1.45	0.92	BC 22
				Max M_y	-6.65	2.17	-2.44	-3.12	▷ 1.78	-0.95	BC 20
				Min M_y	4.44	11.39	2.18	6.36	▷ -5.26	-3.80	BC 9
				Max M_z	1.73	-4.18	-1.92	-3.29	1.60	▷ 1.99	BC 14
				Min M_z	1.72	11.64	1.62	5.50	-4.60	▷ -4.13	BC 11
			0.645	Max N	▷ 7.69	8.91	1.85	5.19	-4.33	-2.66	BC 2
			Links	Min N	▷ -10.78	3.37	-2.35	-2.98	1.28	-2.43	BC 21

4.12 DOORSNEDES - SNEDEKRACHTEN

Resultaatcombinaties

Staaf No.	RC	Knoop No.	Snede x [m]		Krachten [kN] N	V_y	V_z	Momenten [kNm] M_T	M_y	M_z	Bijbehorend Belastingsgeval
85	RC1			Max V_y	1.75	⊳ 11.60	1.73	5.50	-4.49	-4.86	BC 11
				Min V_y	1.73	⊳ -4.19	-1.96	-3.29	1.48	2.25	BC 14
				Max V_z	2.99	9.42	⊳ 3.07	5.63	-4.56	-3.42	BC 7
				Min V_z	2.82	-2.77	⊳ -4.17	-3.88	1.19	1.09	BC 22
				Max M_T	4.17	10.99	2.85	⊳ 6.51	-5.06	-4.19	BC 13
				Min M_T	2.82	-2.77	-4.17	⊳ -3.88	1.19	1.09	BC 22
				Max M_y	-6.64	2.17	-2.48	-3.12	⊳ 1.63	-1.08	BC 20
				Min M_y	4.47	11.34	2.30	6.37	⊳ -5.12	-4.50	BC 9
				Max M_z	1.73	-4.19	-1.96	-3.29	1.48	⊳ 2.25	BC 14
				Min M_z	1.75	11.60	1.73	5.50	-4.49	⊳ -4.86	BC 11
			0.645	Max N	⊳ 7.69	8.91	1.85	5.19	-4.33	-2.66	BC 2
			Rechts	Min N	⊳ -10.78	3.37	-2.35	-2.98	1.28	-2.43	BC 21
				Max V_y	1.75	⊳ 11.60	1.73	5.50	-4.49	-4.86	BC 11
				Min V_y	1.73	⊳ -4.19	-1.96	-3.29	1.48	2.25	BC 14
				Max V_z	2.99	9.42	⊳ 3.07	5.63	-4.56	-3.42	BC 7
				Min V_z	2.82	-2.77	⊳ -4.17	-3.88	1.19	1.09	BC 22
				Max M_T	4.17	10.99	2.85	⊳ 6.51	-5.06	-4.19	BC 13
				Min M_T	2.82	-2.77	-4.17	⊳ -3.88	1.19	1.09	BC 22
				Max M_y	-6.64	2.17	-2.48	-3.12	⊳ 1.63	-1.08	BC 20
				Min M_y	4.47	11.34	2.30	6.37	⊳ -5.12	-4.50	BC 9
				Max M_z	1.73	-4.19	-1.96	-3.29	1.48	⊳ 2.25	BC 14
				Min M_z	1.75	11.60	1.73	5.50	-4.49	⊳ -4.86	BC 11
			1.290	Max N	⊳ 7.83	8.70	2.55	5.22	-2.86	-8.32	BC 2
			Links	Min N	⊳ -10.70	3.27	-2.44	-2.99	-0.30	-4.57	BC 21
				Max V_y	1.93	⊳ 11.31	2.41	5.54	-3.10	-12.22	BC 11
				Min V_y	1.79	⊳ -4.27	-2.04	-3.28	0.16	4.98	BC 14
				Max V_z	3.14	9.20	⊳ 3.77	5.67	-2.30	-9.40	BC 7
				Min V_z	2.89	-2.85	⊳ -4.25	-3.86	-1.55	2.91	BC 22
				Max M_T	4.35	10.71	3.61	⊳ 6.56	-2.91	-11.16	BC 13
				Min M_T	2.89	-2.85	-4.25	⊳ -3.86	-1.55	2.91	BC 22
				Max M_y	1.79	-4.27	-2.04	-3.28	⊳ 0.16	4.98	BC 14
				Min M_y	4.65	11.06	3.06	6.40	⊳ -3.32	-11.70	BC 9
				Max M_z	1.79	-4.27	-2.04	-3.28	0.16	⊳ 4.98	BC 14
				Min M_z	1.93	11.31	2.41	5.54	-3.10	⊳ -12.22	BC 11
		13	1.290	Max N	⊳ 7.83	8.70	2.55	5.22	-2.86	-8.32	BC 2
			Rechts	Min N	⊳ -10.70	3.27	-2.44	-2.99	-0.30	-4.57	BC 21
				Max V_y	1.93	⊳ 11.31	2.41	5.54	-3.10	-12.22	BC 11
				Min V_y	1.79	⊳ -4.27	-2.04	-3.28	0.16	4.98	BC 14
				Max V_z	3.14	9.20	⊳ 3.77	5.67	-2.30	-9.40	BC 7
				Min V_z	2.89	-2.85	⊳ -4.25	-3.86	-1.55	2.91	BC 22
				Max M_T	4.35	10.71	3.61	⊳ 6.56	-2.91	-11.16	BC 13
				Min M_T	2.89	-2.85	-4.25	⊳ -3.86	-1.55	2.91	BC 22
				Max M_y	1.79	-4.27	-2.04	-3.28	⊳ 0.16	4.98	BC 14
				Min M_y	4.65	11.06	3.06	6.40	⊳ -3.32	-11.70	BC 9
				Max M_z	1.79	-4.27	-2.04	-3.28	0.16	⊳ 4.98	BC 14
				Min M_z	1.93	11.31	2.41	5.54	-3.10	⊳ -12.22	BC 11
92	RC1	56	0.000	Max N	⊳ 7.39	-1.31	-1.62	-0.33	1.12	-2.19	BC 21
			Links	Min N	⊳ -5.69	1.46	4.88	0.47	-5.24	0.47	BC 14
				Max V_y	-1.16	⊳ 1.60	-4.01	-0.07	7.10	1.51	BC 18
				Min V_y	7.39	⊳ -1.31	-1.62	-0.33	1.12	-2.19	BC 21
				Max V_z	-5.69	1.46	⊳ 4.88	0.47	-5.24	0.47	BC 14
				Min V_z	3.79	-0.02	⊳ -13.75	-0.21	16.65	2.27	BC 9
				Max M_T	-3.75	1.46	0.43	⊳ 1.05	-4.71	2.31	BC 22
				Min M_T	2.60	0.02	-9.61	⊳ -0.49	14.10	1.12	BC 7
				Max M_y	3.79	-0.02	-13.75	-0.21	⊳ 16.65	2.27	BC 9
				Min M_y	-5.69	1.46	4.88	0.47	⊳ -5.24	0.47	BC 14
				Max M_z	1.10	1.56	-11.54	0.19	13.62	⊳ 3.25	BC 2
				Min M_z	7.39	-1.31	-1.62	-0.33	1.12	⊳ -2.19	BC 21
			0.000	Max N	⊳ 7.39	-1.31	-1.62	-0.33	1.12	-2.19	BC 21
			Rechts	Min N	⊳ -5.69	1.46	4.88	0.47	-5.24	0.47	BC 14
				Max V_y	-1.16	⊳ 1.60	-4.01	-0.07	7.10	1.51	BC 18
				Min V_y	7.39	⊳ -1.31	-1.62	-0.33	1.12	-2.19	BC 21
				Max V_z	-5.69	1.46	⊳ 4.88	0.47	-5.24	0.47	BC 14
				Min V_z	3.79	-0.02	⊳ -13.75	-0.21	16.65	2.27	BC 9
				Max M_T	-3.75	1.46	0.43	⊳ 1.05	-4.71	2.31	BC 22
				Min M_T	2.60	0.02	-9.61	⊳ -0.49	14.10	1.12	BC 7
				Max M_y	3.79	-0.02	-13.75	-0.21	⊳ 16.65	2.27	BC 9
				Min M_y	-5.69	1.46	4.88	0.47	⊳ -5.24	0.47	BC 14
				Max M_z	1.10	1.56	-11.54	0.19	13.62	⊳ 3.25	BC 2
				Min M_z	7.39	-1.31	-1.62	-0.33	1.12	⊳ -2.19	BC 21
			0.583	Max N	⊳ 7.44	-1.39	-1.41	-0.33	0.23	-1.40	BC 21
			Links	Min N	⊳ -5.63	0.95	4.77	0.47	-2.41	-0.23	BC 14
				Max V_y	-1.07	⊳ 1.05	-3.70	-0.07	4.85	0.73	BC 18
				Min V_y	7.44	⊳ -1.39	-1.41	-0.33	0.23	-1.40	BC 21
				Max V_z	-5.63	0.95	⊳ 4.77	0.47	-2.41	-0.23	BC 14
				Min V_z	3.98	-0.30	⊳ -12.99	-0.22	8.81	2.34	BC 9
				Max M_T	-3.70	0.95	0.64	⊳ 1.05	-4.40	1.61	BC 22
				Min M_T	2.74	-0.20	-9.08	⊳ -0.49	8.62	1.16	BC 7
				Max M_y	3.47	-0.30	-11.97	-0.37	⊳ 9.32	1.88	BC 13
				Min M_y	-3.70	0.95	0.64	1.05	⊳ -4.40	1.61	BC 22
				Max M_z	2.73	0.26	-12.86	-0.04	8.52	⊳ 2.56	BC 8
				Min M_z	7.44	-1.39	-1.41	-0.33	0.23	⊳ -1.40	BC 21
			0.583	Max N	⊳ 7.44	-1.39	-1.41	-0.33	0.23	-1.40	BC 21
			Rechts	Min N	⊳ -5.63	0.95	4.77	0.47	-2.41	-0.23	BC 14

4.12 DOORSNEDES - SNEDEKRACHTEN

Resultaatcombinaties

Staaf No.	RC	Knoop No.	Snede x [m]		Krachten [kN] N	V_y	V_z	Momenten [kNm] M_T	M_y	M_z	Bijbehorend Belastingsgeval
92	RC1			Max V_y	-1.07	▷ 1.05	-3.70	-0.07	4.85	0.73	BC 18
				Min V_y	7.44	▷ -1.39	-1.41	-0.33	0.23	-1.40	BC 21
				Max V_z	-5.63	0.95	▷ 4.77	0.47	-2.41	-0.23	BC 14
				Min V_z	3.98	-0.30	▷ -12.99	-0.22	8.81	2.34	BC 9
				Max M_T	-3.70	0.95	0.64	▷ 1.05	-4.40	1.61	BC 22
				Min M_T	2.74	-0.20	-9.08	▷ -0.49	8.62	1.16	BC 7
				Max M_y	3.47	-0.30	-11.97	-0.37	▷ 9.32	1.88	BC 13
				Min M_y	-3.70	0.95	0.64	1.05	▷ -4.40	1.61	BC 22
				Max M_z	2.73	0.26	-12.86	-0.04	8.52	▷ 2.56	BC 8
				Min M_z	7.44	-1.39	-1.41	-0.33	0.23	▷ -1.40	BC 21
			0.645	Max N	▷ 7.44	-1.40	-1.39	-0.33	0.15	-1.31	BC 21
			Links	Min N	▷ -5.63	0.89	4.73	0.47	-2.11	-0.29	BC 14
				Max V_y	-1.06	▷ 0.99	-3.67	-0.07	4.62	0.67	BC 18
				Min V_y	7.44	▷ -1.40	-1.39	-0.33	0.15	-1.31	BC 21
				Max V_z	-5.63	0.89	▷ 4.73	0.47	-2.11	-0.29	BC 14
				Min V_z	4.01	-0.35	▷ -12.85	-0.22	8.00	2.36	BC 9
				Max M_T	-3.69	0.89	0.66	▷ 1.05	-4.36	1.55	BC 22
				Min M_T	2.77	-0.24	-8.99	▷ -0.49	8.06	1.18	BC 7
				Max M_y	3.50	-0.36	-11.84	-0.37	▷ 8.57	1.90	BC 13
				Min M_y	-3.69	0.89	0.66	1.05	▷ -4.36	1.55	BC 22
				Max M_z	2.76	0.18	-12.72	-0.04	7.73	▷ 2.54	BC 8
				Min M_z	7.44	-1.40	-1.39	-0.33	0.15	▷ -1.31	BC 21
			0.645	Max N	▷ 7.44	-1.40	-1.39	-0.33	0.15	-1.31	BC 21
			Rechts	Min N	▷ -5.63	0.89	4.73	0.47	-2.11	-0.29	BC 14
				Max V_y	-1.06	▷ 0.99	-3.67	-0.07	4.62	0.67	BC 18
				Min V_y	7.44	▷ -1.40	-1.39	-0.33	0.15	-1.31	BC 21
				Max V_z	-5.63	0.89	▷ 4.73	0.47	-2.11	-0.29	BC 14
				Min V_z	4.01	-0.35	▷ -12.85	-0.22	8.00	2.36	BC 9
				Max M_T	-3.69	0.89	0.66	▷ 1.05	-4.36	1.55	BC 22
				Min M_T	2.77	-0.24	-8.99	▷ -0.49	8.06	1.18	BC 7
				Max M_y	3.50	-0.36	-11.84	-0.37	▷ 8.57	1.90	BC 13
				Min M_y	-3.69	0.89	0.66	1.05	▷ -4.36	1.55	BC 22
				Max M_z	2.76	0.18	-12.72	-0.04	7.73	▷ 2.54	BC 8
				Min M_z	7.44	-1.40	-1.39	-0.33	0.15	▷ -1.31	BC 21
			1.290	Max N	▷ 7.49	-1.49	-1.16	-0.33	-0.67	-0.38	BC 21
			Links	Min N	▷ -5.56	0.33	4.64	0.47	0.88	-0.68	BC 14
				Max V_y	-0.96	▷ 0.38	-3.33	-0.07	2.37	0.23	BC 18
				Min V_y	7.49	▷ -1.49	-1.16	-0.33	-0.67	-0.38	BC 21
				Max V_z	-5.56	0.33	▷ 4.64	0.47	0.88	-0.68	BC 14
				Min V_z	4.22	-0.68	▷ -11.99	-0.24	0.06	2.71	BC 9
				Max M_T	-3.63	0.33	0.89	▷ 1.06	-3.86	1.16	BC 22
				Min M_T	2.92	-0.49	-8.38	▷ -0.49	2.50	1.43	BC 7
				Max M_y	1.50	-0.21	-3.59	-0.44	▷ 2.75	0.40	BC 19
				Min M_y	-3.63	0.33	0.89	1.06	▷ -3.86	1.16	BC 22
				Max M_z	4.22	-0.68	-11.99	-0.24	0.06	▷ 2.71	BC 9
				Min M_z	-5.56	0.33	4.64	0.47	0.88	▷ -0.68	BC 14
		57	1.290	Max N	▷ 7.49	-1.49	-1.16	-0.33	-0.67	-0.38	BC 21
			Rechts	Min N	▷ -5.56	0.33	4.64	0.47	0.88	-0.68	BC 14
				Max V_y	-0.96	▷ 0.38	-3.33	-0.07	2.37	0.23	BC 18
				Min V_y	7.49	▷ -1.49	-1.16	-0.33	-0.67	-0.38	BC 21
				Max V_z	-5.56	0.33	▷ 4.64	0.47	0.88	-0.68	BC 14
				Min V_z	4.22	-0.68	▷ -11.99	-0.24	0.06	2.71	BC 9
				Max M_T	-3.63	0.33	0.89	▷ 1.06	-3.86	1.16	BC 22
				Min M_T	2.92	-0.49	-8.38	▷ -0.49	2.50	1.43	BC 7
				Max M_y	1.50	-0.21	-3.59	-0.44	▷ 2.75	0.40	BC 19
				Min M_y	-3.63	0.33	0.89	1.06	▷ -3.86	1.16	BC 22
				Max M_z	4.22	-0.68	-11.99	-0.24	0.06	▷ 2.71	BC 9
				Min M_z	-5.56	0.33	4.64	0.47	0.88	▷ -0.68	BC 14
93	RC1	57	0.000	Max N	▷ 7.83	-0.17	-4.83	2.40	-0.18	1.69	BC 5
			Links	Min N	▷ -5.58	1.03	1.79	-1.11	0.72	-0.68	BC 14
				Max V_y	1.47	▷ 1.45	-4.93	2.71	-0.00	2.57	BC 2
				Min V_y	7.79	▷ -0.96	-0.52	0.10	-0.59	-0.96	BC 21
				Max V_z	-5.58	1.03	▷ 1.79	-1.11	0.72	-0.68	BC 14
				Min V_z	4.68	0.35	▷ -5.91	2.93	0.37	2.73	BC 9
				Max M_T	3.36	0.89	-5.84	▷ 3.05	0.17	2.78	BC 8
				Min M_T	-2.96	-0.05	1.64	▷ -1.34	1.11	-0.79	BC 15
				Max M_y	1.40	0.18	-2.70	0.05	▷ 2.78	0.56	BC 19
				Min M_y	-3.70	1.28	1.34	1.12	▷ -3.83	1.22	BC 22
				Max M_z	3.36	0.89	-5.84	3.05	0.17	▷ 2.78	BC 8
				Min M_z	7.79	-0.96	-0.52	0.10	-0.59	▷ -0.96	BC 21
			0.000	Max N	▷ 7.83	-0.17	-4.83	2.40	-0.18	1.69	BC 5
			Rechts	Min N	▷ -5.58	1.03	1.79	-1.11	0.72	-0.68	BC 14
				Max V_y	1.47	▷ 1.45	-4.93	2.71	-0.00	2.57	BC 2
				Min V_y	7.79	▷ -0.96	-0.52	0.10	-0.59	-0.96	BC 21
				Max V_z	-5.58	1.03	▷ 1.79	-1.11	0.72	-0.68	BC 14
				Min V_z	4.68	0.35	▷ -5.91	2.93	0.37	2.73	BC 9
				Max M_T	3.36	0.89	-5.84	▷ 3.05	0.17	2.78	BC 8
				Min M_T	-2.96	-0.05	1.64	▷ -1.34	1.11	-0.79	BC 15
				Max M_y	1.40	0.18	-2.70	0.05	▷ 2.78	0.56	BC 19
				Min M_y	-3.70	1.28	1.34	1.12	▷ -3.83	1.22	BC 22
				Max M_z	3.36	0.89	-5.84	3.05	0.17	▷ 2.78	BC 8
				Min M_z	7.79	-0.96	-0.52	0.10	-0.59	▷ -0.96	BC 21
			0.583	Max N	▷ 7.95	-0.39	-4.16	2.39	-2.84	1.85	BC 5
			Links	Min N	▷ -5.52	0.52	1.68	-1.11	1.76	-1.13	BC 14

4.12 DOORSNEDES - SNEDEKRACHTEN

Resultaatcombinaties

Staaf No.	RC	Knoop No.	Snede x [m]		Krachten [kN] N	V_y	V_z	Momenten [kNm] M_T	M_y	M_z	Bijbehorend Belastingsgeval
93	RC1			Max V_y	1.60	▷ 0.82	-4.28	2.70	-2.73	1.90	BC 2
				Min V_y	7.84	▷ -1.04	-0.31	0.10	-0.84	-0.38	BC 21
				Max V_z	-5.52	0.52	▷ 1.68	-1.11	1.76	-1.13	BC 14
				Min V_z	4.84	0.08	▷ -5.19	2.92	-2.91	2.59	BC 9
				Max M_T	3.54	0.41	-5.12	▷ 3.04	-3.07	2.39	BC 8
				Min M_T	-2.91	-0.14	1.54	▷ -1.34	2.06	-0.74	BC 15
				Max M_y	-2.91	-0.14	1.54	-1.34	▷ 2.06	-0.74	BC 15
				Min M_y	5.41	0.14	-5.00	3.00	▷ -3.28	2.16	BC 10
				Max M_z	4.84	0.08	-5.19	2.92	-2.91	▷ 2.59	BC 9
				Min M_z	-5.52	0.52	1.68	-1.11	1.76	▷ -1.13	BC 14
			0.583	Max N	▷ 7.95	-0.39	-4.16	2.39	-2.84	1.85	BC 5
			Rechts	Min N	▷ -5.52	0.52	1.68	-1.11	1.76	-1.13	BC 14
				Max V_y	1.60	▷ 0.81	-4.28	2.70	-2.73	1.90	BC 2
				Min V_y	7.84	▷ -1.04	-0.31	0.10	-0.84	-0.38	BC 21
				Max V_z	-5.52	0.52	▷ 1.68	-1.11	1.76	-1.13	BC 14
				Min V_z	4.84	0.08	▷ -5.19	2.92	-2.91	2.59	BC 9
				Max M_T	3.54	0.41	-5.12	▷ 3.04	-3.07	2.39	BC 8
				Min M_T	-2.91	-0.14	1.54	▷ -1.34	2.06	-0.74	BC 15
				Max M_y	-2.91	-0.14	1.54	-1.34	▷ 2.06	-0.74	BC 15
				Min M_y	5.41	0.14	-5.00	3.00	▷ -3.28	2.16	BC 10
				Max M_z	4.84	0.08	-5.19	2.92	-2.91	▷ 2.59	BC 9
				Min M_z	-5.52	0.52	1.68	-1.11	1.76	▷ -1.13	BC 14
			0.645	Max N	▷ 7.97	-0.43	-4.04	2.39	-3.10	1.87	BC 5
			Links	Min N	▷ -5.51	0.47	1.64	-1.11	1.86	-1.16	BC 14
				Max V_y	1.63	▷ 0.73	-4.16	2.70	-2.99	1.85	BC 2
				Min V_y	7.84	▷ -1.06	-0.28	0.10	-0.86	-0.31	BC 21
				Max V_z	-5.51	0.47	▷ 1.64	-1.11	1.86	-1.16	BC 14
				Min V_z	4.87	0.03	▷ -5.06	2.92	-3.23	2.59	BC 9
				Max M_T	3.57	0.34	-4.99	▷ 3.04	-3.39	2.37	BC 8
				Min M_T	-2.91	-0.15	1.51	▷ -1.34	2.16	-0.73	BC 15
				Max M_y	-2.91	-0.15	1.51	-1.34	▷ 2.16	-0.73	BC 15
				Min M_y	5.44	0.07	-4.86	3.00	▷ -3.59	2.16	BC 10
				Max M_z	4.87	0.03	-5.06	2.92	-3.23	▷ 2.59	BC 9
				Min M_z	-5.51	0.47	1.64	-1.11	1.86	▷ -1.16	BC 14
			0.645	Max N	▷ 7.97	-0.43	-4.04	2.39	-3.10	1.87	BC 5
			Rechts	Min N	▷ -5.51	0.47	1.64	-1.11	1.86	-1.16	BC 14
				Max V_y	1.63	▷ 0.73	-4.16	2.70	-2.99	1.85	BC 2
				Min V_y	7.84	▷ -1.06	-0.28	0.10	-0.86	-0.31	BC 21
				Max V_z	-5.51	0.47	▷ 1.64	-1.11	1.86	-1.16	BC 14
				Min V_z	4.87	0.03	▷ -5.06	2.92	-3.23	2.59	BC 9
				Max M_T	3.57	0.34	-4.99	▷ 3.04	-3.39	2.37	BC 8
				Min M_T	-2.91	-0.15	1.51	▷ -1.34	2.16	-0.73	BC 15
				Max M_y	-2.91	-0.15	1.51	-1.34	▷ 2.16	-0.73	BC 15
				Min M_y	5.44	0.07	-4.86	3.00	▷ -3.59	2.16	BC 10
				Max M_z	4.87	0.03	-5.06	2.92	-3.23	▷ 2.59	BC 9
				Min M_z	-5.51	0.47	1.64	-1.11	1.86	▷ -1.16	BC 14
			1.290	Max N	▷ 8.11	-0.67	-3.31	2.39	-5.41	2.24	BC 5
			Links	Min N	▷ -5.45	-0.10	1.55	-1.11	2.86	-1.28	BC 14
				Max V_y	-3.58	▷ 0.16	1.79	1.13	-1.81	0.30	BC 22
				Min V_y	7.89	▷ -1.15	-0.05	0.10	-0.96	0.40	BC 21
				Max V_z	-3.58	0.16	▷ 1.79	1.13	-1.81	0.30	BC 22
				Min V_z	4.60	-0.34	▷ -4.30	2.37	-4.99	2.29	BC 13
				Max M_T	3.76	-0.21	-4.18	▷ 3.03	-6.28	2.35	BC 8
				Min M_T	-2.86	-0.25	1.42	▷ -1.34	3.07	-0.60	BC 15
				Max M_y	-2.86	-0.25	1.42	-1.34	▷ 3.07	-0.60	BC 15
				Min M_y	5.63	-0.48	-4.05	2.99	▷ -6.39	2.32	BC 10
				Max M_z	5.06	-0.28	-4.24	2.91	-6.17	▷ 2.69	BC 9
				Min M_z	-5.45	-0.10	1.55	-1.11	2.86	▷ -1.28	BC 14
		58	1.290	Max N	▷ 8.11	-0.67	-3.31	2.39	-5.41	2.24	BC 5
			Rechts	Min N	▷ -5.45	-0.10	1.55	-1.11	2.86	-1.28	BC 14
				Max V_y	-3.58	▷ 0.16	1.79	1.13	-1.81	0.30	BC 22
				Min V_y	7.89	▷ -1.15	-0.05	0.10	-0.96	0.40	BC 21
				Max V_z	-3.58	0.16	▷ 1.79	1.13	-1.81	0.30	BC 22
				Min V_z	4.60	-0.34	▷ -4.30	2.37	-4.99	2.29	BC 13
				Max M_T	3.76	-0.21	-4.18	▷ 3.03	-6.28	2.35	BC 8
				Min M_T	-2.86	-0.25	1.42	▷ -1.34	3.07	-0.60	BC 15
				Max M_y	-2.86	-0.25	1.42	-1.34	▷ 3.07	-0.60	BC 15
				Min M_y	5.63	-0.48	-4.05	2.99	▷ -6.39	2.32	BC 10
				Max M_z	5.06	-0.28	-4.24	2.91	-6.17	▷ 2.69	BC 9
				Min M_z	-5.45	-0.10	1.55	-1.11	2.86	▷ -1.28	BC 14
94	RC1	58	0.000	Max N	▷ 8.64	-5.07	0.56	0.44	-0.89	-0.19	BC 21
			Links	Min N	▷ -5.17	-1.80	-1.35	-2.86	2.71	-1.37	BC 14
				Max V_y	2.93	▷ 12.17	1.68	6.48	-6.04	2.73	BC 8
				Min V_y	8.64	▷ -5.07	0.56	0.44	-0.89	-0.19	BC 21
				Max V_z	-3.79	2.16	▷ 2.29	1.33	-1.81	0.42	BC 22
				Min V_z	-2.28	-4.07	▷ -1.37	-2.99	2.94	-0.94	BC 15
				Max M_T	2.93	12.17	1.68	▷ 6.48	-6.04	2.73	BC 8
				Min M_T	-2.28	-4.07	-1.37	▷ -2.99	2.94	-0.94	BC 15
				Max M_y	-2.28	-4.07	-1.37	-2.99	▷ 2.94	-0.94	BC 15
				Min M_y	5.02	10.59	1.80	6.44	▷ -6.15	2.54	BC 10
				Max M_z	4.36	11.03	1.66	6.40	-5.93	▷ 2.96	BC 9
				Min M_z	-5.17	-1.80	-1.35	-2.86	2.71	▷ -1.37	BC 14
			0.000	Max N	▷ 8.64	-5.07	0.56	0.44	-0.89	-0.19	BC 21
			Rechts	Min N	▷ -5.17	-1.80	-1.35	-2.86	2.71	-1.37	BC 14

4.12 DOORSNEDES - SNEDEKRACHTEN

Resultaatcombinaties

Staaf No.	RC	Knoop No.	Snede x [m]		Krachten [kN] N	V_y	V_z	Momenten [kNm] M_T	M_y	M_z	Bijbehorend Belastingsgeval
94	RC1			Max V_y	2.93	▷ 12.17	1.68	6.48	-6.04	2.73	BC 8
				Min V_y	8.64	▷ -5.07	0.56	0.44	-0.89	-0.19	BC 21
				Max V_z	-3.79	2.16	▷ 2.29	1.33	-1.81	0.42	BC 22
				Min V_z	-2.28	-4.07	▷ -1.37	-2.99	2.94	-0.94	BC 15
				Max M_T	2.93	12.17	1.68	▷ 6.48	-6.04	2.73	BC 8
				Min M_T	-2.28	-4.07	-1.37	▷ -2.99	2.94	-0.94	BC 15
				Max M_y	-2.28	-4.07	-1.37	-2.99	▷ 2.94	-0.94	BC 15
				Min M_y	5.02	10.59	1.80	6.44	▷ -6.15	2.54	BC 10
				Max M_z	4.36	11.03	1.66	6.40	-5.93	▷ 2.96	BC 9
				Min M_z	-5.17	-1.80	-1.35	-2.86	2.71	▷ -1.37	BC 14
			0.583	Max N	▷ 8.68	-5.15	0.77	0.44	-0.51	2.78	BC 21
			Links	Min N	▷ -5.11	-2.31	-1.46	-2.86	1.92	-0.18	BC 14
				Max V_y	3.10	▷ 11.71	2.35	6.52	-4.92	-4.24	BC 8
				Min V_y	8.68	▷ -5.15	0.77	0.44	-0.51	2.78	BC 21
				Max V_z	-3.73	1.65	▷ 2.49	1.35	-0.43	-0.69	BC 22
				Min V_z	-2.23	-4.15	▷ -1.47	-2.99	2.13	1.46	BC 15
				Max M_T	3.10	11.71	2.35	▷ 6.52	-4.92	-4.24	BC 8
				Min M_T	-2.23	-4.15	-1.47	▷ -2.99	2.13	1.46	BC 15
				Max M_y	-2.23	-4.15	-1.47	-2.99	▷ 2.13	1.46	BC 15
				Min M_y	5.18	10.13	2.47	6.47	▷ -4.96	-3.51	BC 10
				Max M_z	8.68	-5.15	0.77	0.44	-0.51	▷ 2.78	BC 21
				Min M_z	0.86	10.82	2.20	5.64	-4.14	▷ -4.30	BC 2
			0.583	Max N	▷ 8.68	-5.15	0.77	0.44	-0.51	2.78	BC 21
			Rechts	Min N	▷ -5.11	-2.31	-1.46	-2.86	1.92	-0.18	BC 14
				Max V_y	3.10	▷ 11.71	2.35	6.52	-4.92	-4.24	BC 8
				Min V_y	8.68	▷ -5.15	0.77	0.44	-0.51	2.78	BC 21
				Max V_z	-3.73	1.65	▷ 2.49	1.35	-0.43	-0.69	BC 22
				Min V_z	-2.23	-4.15	▷ -1.47	-2.99	2.13	1.46	BC 15
				Max M_T	3.10	11.71	2.35	▷ 6.52	-4.92	-4.24	BC 8
				Min M_T	-2.23	-4.15	-1.47	▷ -2.99	2.13	1.46	BC 15
				Max M_y	-2.23	-4.15	-1.47	-2.99	▷ 2.13	1.46	BC 15
				Min M_y	5.18	10.13	2.47	6.47	▷ -4.96	-3.51	BC 10
				Max M_z	8.68	-5.15	0.77	0.44	-0.51	▷ 2.78	BC 21
				Min M_z	0.86	10.82	2.20	5.64	-4.14	▷ -4.30	BC 2
			0.645	Max N	▷ 8.69	-5.17	0.80	0.44	-0.46	3.10	BC 21
			Links	Min N	▷ -5.11	-2.36	-1.50	-2.86	1.83	-0.03	BC 14
				Max V_y	3.13	▷ 11.64	2.47	6.52	-4.77	-4.97	BC 8
				Min V_y	8.69	▷ -5.17	0.80	0.44	-0.46	3.10	BC 21
				Max V_z	5.21	10.06	▷ 2.60	6.47	-4.80	-4.14	BC 10
				Min V_z	-2.23	-4.16	▷ -1.51	-2.99	2.04	1.72	BC 15
				Max M_T	3.13	11.64	2.47	▷ 6.52	-4.77	-4.97	BC 8
				Min M_T	-2.23	-4.16	-1.51	▷ -2.99	2.04	1.72	BC 15
				Max M_y	-2.23	-4.16	-1.51	-2.99	▷ 2.04	1.72	BC 15
				Min M_y	5.21	10.06	2.60	6.47	▷ -4.80	-4.14	BC 10
				Max M_z	8.69	-5.17	0.80	0.44	-0.46	▷ 3.10	BC 21
				Min M_z	3.13	11.64	2.47	6.52	-4.77	▷ -4.97	BC 8
			0.645	Max N	▷ 8.69	-5.17	0.80	0.44	-0.46	3.10	BC 21
			Rechts	Min N	▷ -5.11	-2.36	-1.50	-2.86	1.83	-0.03	BC 14
				Max V_y	3.13	▷ 11.64	2.47	6.52	-4.77	-4.97	BC 8
				Min V_y	8.69	▷ -5.17	0.80	0.44	-0.46	3.10	BC 21
				Max V_z	5.21	10.06	▷ 2.60	6.47	-4.80	-4.14	BC 10
				Min V_z	-2.23	-4.16	▷ -1.51	-2.99	2.04	1.72	BC 15
				Max M_T	3.13	11.64	2.47	▷ 6.52	-4.77	-4.97	BC 8
				Min M_T	-2.23	-4.16	-1.51	▷ -2.99	2.04	1.72	BC 15
				Max M_y	-2.23	-4.16	-1.51	-2.99	▷ 2.04	1.72	BC 15
				Min M_y	5.21	10.06	2.60	6.47	▷ -4.80	-4.14	BC 10
				Max M_z	8.69	-5.17	0.80	0.44	-0.46	▷ 3.10	BC 21
				Min M_z	3.13	11.64	2.47	6.52	-4.77	▷ -4.97	BC 8
			1.290	Max N	▷ 8.73	-5.27	1.02	0.43	0.13	6.47	BC 21
			Links	Min N	▷ -5.04	-2.92	-1.60	-2.85	0.80	1.68	BC 14
				Max V_y	3.30	▷ 11.13	3.23	6.56	-2.87	-12.29	BC 8
				Min V_y	8.73	▷ -5.27	1.02	0.43	0.13	6.47	BC 21
				Max V_z	5.39	9.55	▷ 3.35	6.51	-2.81	-10.44	BC 10
				Min V_z	-2.18	-4.26	▷ -1.60	-2.98	1.01	4.44	BC 15
				Max M_T	3.30	11.13	3.23	▷ 6.56	-2.87	-12.29	BC 8
				Min M_T	-2.18	-4.26	-1.60	▷ -2.98	1.01	4.44	BC 15
				Max M_y	-0.81	-0.31	2.73	1.21	▷ 1.64	1.14	BC 23
				Min M_y	2.97	10.15	2.15	5.48	▷ -3.01	-11.49	BC 12
				Max M_z	8.73	-5.27	1.02	0.43	0.13	▷ 6.47	BC 21
				Min M_z	3.30	11.13	3.23	6.56	-2.87	▷ -12.29	BC 8
		38	1.290	Max N	▷ 8.73	-5.27	1.02	0.43	0.13	6.47	BC 21
			Rechts	Min N	▷ -5.04	-2.92	-1.60	-2.85	0.80	1.68	BC 14
				Max V_y	3.30	▷ 11.13	3.23	6.56	-2.87	-12.29	BC 8
				Min V_y	8.73	▷ -5.27	1.02	0.43	0.13	6.47	BC 21
				Max V_z	5.39	9.55	▷ 3.35	6.51	-2.81	-10.44	BC 10
				Min V_z	-2.18	-4.26	▷ -1.60	-2.98	1.01	4.44	BC 15
				Max M_T	3.30	11.13	3.23	▷ 6.56	-2.87	-12.29	BC 8
				Min M_T	-2.18	-4.26	-1.60	▷ -2.98	1.01	4.44	BC 15
				Max M_y	-0.81	-0.31	2.73	1.21	▷ 1.64	1.14	BC 23
				Min M_y	2.97	10.15	2.15	5.48	▷ -3.01	-11.49	BC 12
				Max M_z	8.73	-5.27	1.02	0.43	0.13	▷ 6.47	BC 21
				Min M_z	3.30	11.13	3.23	6.56	-2.87	▷ -12.29	BC 8
95	RC1	59	0.000	Max N	▷ 6.93	-1.28	1.78	0.48	-0.94	-2.34	BC 21
			Links	Min N	▷ -5.69	1.46	-4.88	-0.47	5.24	0.47	BC 14

4.12 DOORSNEDES - SNEDEKRACHTEN

Resultaatcombinaties

Staaf No.	RC	Knoop No.	Snede x [m]		Krachten [kN] N	V_y	V_z	Momenten [kNm] M_T	M_y	M_z	Bijbehorend Belastingsgeval
95	RC1			Max V_y	-0.92	▷ 1.57	5.10	-0.59	-3.93	2.75	BC 18
				Min V_y	6.93	▷ -1.28	1.78	0.48	-0.94	-2.34	BC 21
				Max V_z	3.56	0.00	▷ 13.83	0.28	-16.57	2.19	BC 9
				Min V_z	-5.69	1.46	▷ -4.88	-0.47	5.24	0.47	BC 14
				Max M_T	-2.12	0.04	-2.20	▷ 0.79	-2.20	-1.55	BC 23
				Min M_T	-0.92	1.57	5.10	▷ -0.59	-3.93	2.75	BC 18
				Max M_y	-5.69	1.46	-4.88	-0.47	▷ 5.24	0.47	BC 14
				Min M_y	3.56	0.00	13.83	0.28	▷ -16.57	2.19	BC 9
				Max M_z	0.37	1.52	10.42	-0.55	-10.17	▷ 3.57	BC 6
				Min M_z	6.93	-1.28	1.78	0.48	-0.94	▷ -2.34	BC 21
			0.000	Max N	▷ 6.93	-1.28	1.78	0.48	-0.94	-2.34	BC 21
			Rechts	Min N	▷ -5.69	1.46	-4.88	-0.47	5.24	0.47	BC 14
				Max V_y	-0.92	▷ 1.57	5.10	-0.59	-3.93	2.75	BC 18
				Min V_y	6.93	▷ -1.28	1.78	0.48	-0.94	-2.34	BC 21
				Max V_z	3.56	0.00	▷ 13.83	0.28	-16.57	2.19	BC 9
				Min V_z	-5.69	1.46	▷ -4.88	-0.47	5.24	0.47	BC 14
				Max M_T	-2.12	0.04	-2.20	▷ 0.79	-2.20	-1.55	BC 23
				Min M_T	-0.92	1.57	5.10	▷ -0.59	-3.93	2.75	BC 18
				Max M_y	-5.69	1.46	-4.88	-0.47	▷ 5.24	0.47	BC 14
				Min M_y	3.56	0.00	13.83	0.28	▷ -16.57	2.19	BC 9
				Max M_z	0.37	1.52	10.42	-0.55	-10.17	▷ 3.57	BC 6
				Min M_z	6.93	-1.28	1.78	0.48	-0.94	▷ -2.34	BC 21
			0.583	Max N	▷ 7.00	-1.36	1.58	0.48	0.04	-1.57	BC 21
			Links	Min N	▷ -5.63	0.95	-4.77	-0.47	2.41	-0.23	BC 14
				Max V_y	-4.10	▷ 1.03	-2.52	0.28	-3.21	-0.95	BC 22
				Min V_y	7.00	▷ -1.36	1.58	0.48	0.04	-1.57	BC 21
				Max V_z	3.76	-0.28	▷ 13.08	0.29	-8.67	2.25	BC 9
				Min V_z	-5.63	0.95	▷ -4.77	-0.47	2.41	-0.23	BC 14
				Max M_T	-2.05	-0.04	-2.09	▷ 0.80	-3.47	-1.55	BC 23
				Min M_T	-0.84	1.01	4.64	▷ -0.59	-1.07	2.00	BC 18
				Max M_y	-5.63	0.95	-4.77	-0.47	▷ 2.41	-0.23	BC 14
				Min M_y	3.76	-0.28	13.08	0.29	▷ -8.67	2.25	BC 9
				Max M_z	0.51	0.87	9.75	-0.53	-4.25	▷ 2.86	BC 6
				Min M_z	7.00	-1.36	1.58	0.48	0.04	▷ -1.57	BC 21
			0.583	Max N	▷ 7.00	-1.36	1.58	0.48	0.04	-1.57	BC 21
			Rechts	Min N	▷ -5.63	0.95	-4.77	-0.47	2.41	-0.23	BC 14
				Max V_y	-4.10	▷ 1.03	-2.52	0.28	-3.21	-0.95	BC 22
				Min V_y	7.00	▷ -1.36	1.58	0.48	0.04	-1.57	BC 21
				Max V_z	3.76	-0.28	▷ 13.08	0.29	-8.67	2.25	BC 9
				Min V_z	-5.63	0.95	▷ -4.77	-0.47	2.41	-0.23	BC 14
				Max M_T	-2.05	-0.04	-2.09	▷ 0.80	-3.47	-1.55	BC 23
				Min M_T	-0.84	1.01	4.64	▷ -0.59	-1.07	2.00	BC 18
				Max M_y	-5.63	0.95	-4.77	-0.47	▷ 2.41	-0.23	BC 14
				Min M_y	3.76	-0.28	13.08	0.29	▷ -8.67	2.25	BC 9
				Max M_z	0.51	0.87	9.75	-0.53	-4.25	▷ 2.86	BC 6
				Min M_z	7.00	-1.36	1.58	0.48	0.04	▷ -1.57	BC 21
			0.645	Max N	▷ 7.01	-1.37	1.55	0.48	0.14	-1.49	BC 21
			Links	Min N	▷ -5.63	0.89	-4.73	-0.47	2.11	-0.29	BC 14
				Max V_y	-4.09	▷ 0.97	-2.48	0.29	-3.37	-1.01	BC 22
				Min V_y	7.01	▷ -1.37	1.55	0.48	0.14	-1.49	BC 21
				Max V_z	3.80	-0.33	▷ 12.94	0.29	-7.86	2.27	BC 9
				Min V_z	-5.63	0.89	▷ -4.73	-0.47	2.11	-0.29	BC 14
				Max M_T	-2.04	-0.05	-2.05	▷ 0.80	-3.60	-1.54	BC 23
				Min M_T	-0.83	0.95	4.57	▷ -0.58	-0.78	1.94	BC 18
				Max M_y	-5.63	0.89	-4.73	-0.47	▷ 2.11	-0.29	BC 14
				Min M_y	3.80	-0.33	12.94	0.29	▷ -7.86	2.27	BC 9
				Max M_z	0.54	0.79	9.62	-0.53	-3.65	▷ 2.81	BC 6
				Min M_z	-2.04	-0.05	-2.05	0.80	-3.60	▷ -1.54	BC 23
			0.645	Max N	▷ 7.01	-1.37	1.55	0.48	0.14	-1.49	BC 21
			Rechts	Min N	▷ -5.63	0.89	-4.73	-0.47	2.11	-0.29	BC 14
				Max V_y	-4.09	▷ 0.97	-2.48	0.29	-3.37	-1.01	BC 22
				Min V_y	7.01	▷ -1.37	1.55	0.48	0.14	-1.49	BC 21
				Max V_z	3.80	-0.33	▷ 12.94	0.29	-7.86	2.27	BC 9
				Min V_z	-5.63	0.89	▷ -4.73	-0.47	2.11	-0.29	BC 14
				Max M_T	-2.04	-0.05	-2.05	▷ 0.80	-3.60	-1.54	BC 23
				Min M_T	-0.83	0.95	4.57	▷ -0.58	-0.78	1.94	BC 18
				Max M_y	-5.63	0.89	-4.73	-0.47	▷ 2.11	-0.29	BC 14
				Min M_y	3.80	-0.33	12.94	0.29	▷ -7.86	2.27	BC 9
				Max M_z	0.54	0.79	9.62	-0.53	-3.65	▷ 2.81	BC 6
				Min M_z	-2.04	-0.05	-2.05	0.80	-3.60	▷ -1.54	BC 23
			1.290	Max N	▷ 7.08	-1.46	1.33	0.48	1.06	-0.57	BC 21
			Links	Min N	▷ -5.56	0.33	-4.64	-0.47	-0.88	-0.68	BC 14
				Max V_y	-4.03	▷ 0.41	-2.39	0.29	-4.91	-1.45	BC 22
				Min V_y	7.08	▷ -1.46	1.33	0.48	1.06	-0.57	BC 21
				Max V_z	4.02	-0.66	▷ 12.08	0.30	0.13	2.62	BC 9
				Min V_z	-5.56	0.33	▷ -4.64	-0.47	-0.88	-0.68	BC 14
				Max M_T	-1.96	-0.15	-1.96	▷ 0.80	-4.87	-1.48	BC 23
				Min M_T	-0.74	0.34	4.08	▷ -0.58	1.99	1.52	BC 18
				Max M_y	2.79	-0.49	9.31	-0.02	▷ 2.27	2.52	BC 7
				Min M_y	-4.03	0.41	-2.39	0.29	▷ -4.91	-1.45	BC 22
				Max M_z	2.61	-0.40	11.31	-0.12	1.13	▷ 2.82	BC 12
				Min M_z	-1.96	-0.15	-1.96	0.80	-4.87	▷ -1.48	BC 23
		66	1.290	Max N	▷ 7.08	-1.46	1.33	0.48	1.06	-0.57	BC 21
			Rechts	Min N	▷ -5.56	0.33	-4.64	-0.47	-0.88	-0.68	BC 14

4.12 DOORSNEDES - SNEDEKRACHTEN

Resultaatcombinaties

Staaf No.	RC	Knoop No.	Snede x [m]		Krachten [kN] N	V_y	V_z	Momenten [kNm] M_T	M_y	M_z	Bijbehorend Belastingsgeval
95	RC1			Max V_y	-4.03	▷ 0.41	-2.39	0.29	-4.91	-1.45	BC 22
				Min V_y	7.08	▷ -1.46	1.33	0.48	1.06	-0.57	BC 21
				Max V_z	4.02	-0.66	▷ 12.08	0.30	0.13	2.62	BC 9
				Min V_z	-5.56	0.33	▷ -4.64	-0.47	-0.88	-0.68	BC 14
				Max M_T	-1.96	-0.15	-1.96	▷ 0.80	-4.87	-1.48	BC 23
				Min M_T	-0.74	0.34	4.08	▷ -0.58	1.99	1.52	BC 18
				Max M_y	2.79	-0.49	9.31	-0.02	▷ 2.27	2.52	BC 7
				Min M_y	-4.03	0.41	-2.39	0.29	▷ -4.91	-1.45	BC 22
				Max M_z	2.61	-0.40	11.31	-0.12	1.13	▷ 2.82	BC 12
				Min M_z	-1.96	-0.15	-1.96	0.80	-4.87	▷ -1.48	BC 23
96	RC1	66	0.000	Max N	▷ 7.56	-0.22	5.06	-2.26	0.57	1.55	BC 5
			Links	Min N	▷ -5.58	1.03	-1.79	1.11	-0.72	-0.68	BC 14
				Max V_y	0.77	▷ 1.47	3.83	-3.01	2.01	2.84	BC 6
				Min V_y	7.50	▷ -1.00	0.75	0.04	0.99	-1.10	BC 21
				Max V_z	4.55	0.33	▷ 6.03	-2.86	-0.18	2.66	BC 9
				Min V_z	-5.58	1.03	▷ -1.79	1.11	-0.72	-0.68	BC 14
				Max M_T	-1.86	-0.15	0.80	▷ 2.15	-4.70	-1.45	BC 23
				Min M_T	3.02	0.90	5.29	▷ -3.20	0.83	2.92	BC 12
				Max M_y	0.77	1.47	3.83	-3.01	▷ 2.01	2.84	BC 6
				Min M_y	-4.19	0.98	0.43	1.77	▷ -4.73	-1.20	BC 22
				Max M_z	3.02	0.90	5.29	-3.20	0.83	▷ 2.92	BC 12
				Min M_z	-1.86	-0.15	0.80	2.15	-4.70	▷ -1.45	BC 23
			0.000	Max N	▷ 7.56	-0.22	5.06	-2.26	0.57	1.55	BC 5
			Rechts	Min N	▷ -5.58	1.03	-1.79	1.11	-0.72	-0.68	BC 14
				Max V_y	0.77	▷ 1.47	3.83	-3.01	2.01	2.84	BC 6
				Min V_y	7.50	▷ -1.00	0.75	0.04	0.99	-1.10	BC 21
				Max V_z	4.55	0.33	▷ 6.03	-2.86	-0.18	2.66	BC 9
				Min V_z	-5.58	1.03	▷ -1.79	1.11	-0.72	-0.68	BC 14
				Max M_T	-1.86	-0.15	0.80	▷ 2.15	-4.70	-1.45	BC 23
				Min M_T	3.02	0.90	5.29	▷ -3.20	0.83	2.92	BC 12
				Max M_y	0.77	1.47	3.83	-3.01	▷ 2.01	2.84	BC 6
				Min M_y	-4.19	0.98	0.43	1.77	▷ -4.73	-1.20	BC 22
				Max M_z	3.02	0.90	5.29	-3.20	0.83	▷ 2.92	BC 12
				Min M_z	-1.86	-0.15	0.80	2.15	-4.70	▷ -1.45	BC 23
			0.583	Max N	▷ 7.71	-0.43	4.40	-2.26	3.37	1.73	BC 5
			Links	Min N	▷ -5.52	0.52	-1.68	1.11	-1.76	-1.13	BC 14
				Max V_y	-0.89	▷ 0.86	1.22	-1.69	2.72	1.22	BC 18
				Min V_y	7.57	▷ -1.08	0.54	0.04	1.37	-0.49	BC 21
				Max V_z	4.73	0.06	▷ 5.31	-2.85	3.18	2.53	BC 9
				Min V_z	-5.52	0.52	▷ -1.68	1.11	-1.76	-1.13	BC 14
				Max M_T	-1.79	-0.23	0.91	▷ 2.15	-4.22	-1.34	BC 23
				Min M_T	3.19	0.42	4.57	▷ -3.19	3.75	2.52	BC 12
				Max M_y	3.29	0.14	3.55	-2.64	▷ 4.30	2.43	BC 7
				Min M_y	-4.14	0.47	0.54	1.77	▷ -4.47	-1.62	BC 22
				Max M_z	4.38	0.07	4.76	-3.00	3.86	▷ 2.66	BC 13
				Min M_z	-4.14	0.47	0.54	1.77	-4.47	▷ -1.62	BC 22
			0.583	Max N	▷ 7.71	-0.43	4.40	-2.26	3.37	1.73	BC 5
			Rechts	Min N	▷ -5.52	0.52	-1.68	1.11	-1.76	-1.13	BC 14
				Max V_y	-0.89	▷ 0.86	1.22	-1.69	2.72	1.22	BC 18
				Min V_y	7.57	▷ -1.08	0.54	0.04	1.37	-0.49	BC 21
				Max V_z	4.73	0.06	▷ 5.31	-2.85	3.18	2.53	BC 9
				Min V_z	-5.52	0.52	▷ -1.68	1.11	-1.76	-1.13	BC 14
				Max M_T	-1.79	-0.23	0.91	▷ 2.15	-4.22	-1.34	BC 23
				Min M_T	3.19	0.42	4.57	▷ -3.19	3.75	2.52	BC 12
				Max M_y	3.29	0.14	3.55	-2.64	▷ 4.30	2.43	BC 7
				Min M_y	-4.14	0.47	0.54	1.77	▷ -4.47	-1.62	BC 22
				Max M_z	4.38	0.07	4.76	-3.00	3.86	▷ 2.66	BC 13
				Min M_z	-4.14	0.47	0.54	1.77	-4.47	▷ -1.62	BC 22
			0.645	Max N	▷ 7.73	-0.47	4.28	-2.26	3.64	1.76	BC 5
			Links	Min N	▷ -5.51	0.47	-1.64	1.11	-1.86	-1.16	BC 14
				Max V_y	-0.88	▷ 0.80	1.15	-1.69	2.80	1.17	BC 18
				Min V_y	7.58	▷ -1.10	0.52	0.04	1.40	-0.42	BC 21
				Max V_z	4.76	0.01	▷ 5.18	-2.85	3.51	2.53	BC 9
				Min V_z	-5.51	0.47	▷ -1.64	1.11	-1.86	-1.16	BC 14
				Max M_T	-1.78	-0.24	0.95	▷ 2.15	-4.17	-1.33	BC 23
				Min M_T	3.22	0.35	4.44	▷ -3.19	4.03	2.50	BC 12
				Max M_y	3.31	0.10	3.43	-2.63	▷ 4.52	2.43	BC 7
				Min M_y	-4.13	0.41	0.58	1.77	▷ -4.43	-1.65	BC 22
				Max M_z	4.41	0.02	4.63	-3.00	4.15	▷ 2.65	BC 13
				Min M_z	-4.13	0.41	0.58	1.77	-4.43	▷ -1.65	BC 22
			0.645	Max N	▷ 7.73	-0.47	4.28	-2.26	3.64	1.76	BC 5
			Rechts	Min N	▷ -5.51	0.47	-1.64	1.11	-1.86	-1.16	BC 14
				Max V_y	-0.88	▷ 0.80	1.15	-1.69	2.80	1.17	BC 18
				Min V_y	7.58	▷ -1.10	0.52	0.04	1.40	-0.42	BC 21
				Max V_z	4.76	0.01	▷ 5.18	-2.85	3.51	2.53	BC 9
				Min V_z	-5.51	0.47	▷ -1.64	1.11	-1.86	-1.16	BC 14
				Max M_T	-1.78	-0.24	0.95	▷ 2.15	-4.17	-1.33	BC 23
				Min M_T	3.22	0.35	4.44	▷ -3.19	4.03	2.50	BC 12
				Max M_y	3.31	0.10	3.43	-2.63	▷ 4.52	2.43	BC 7
				Min M_y	-4.13	0.41	0.58	1.77	▷ -4.43	-1.65	BC 22
				Max M_z	4.41	0.02	4.63	-3.00	4.15	▷ 2.65	BC 13
				Min M_z	-4.13	0.41	0.58	1.77	-4.43	▷ -1.65	BC 22
			1.290	Max N	▷ 7.90	-0.71	3.55	-2.25	6.11	2.15	BC 5
			Links	Min N	▷ -5.45	-0.10	-1.55	1.11	-2.86	-1.28	BC 14

4.12 DOORSNEDES - SNEDEKRACHTEN

Resultaatcombinaties

Staaf No.	RC	Knoop No.	Snede x [m]		Krachten [kN] N	V_y	V_z	Momenten [kNm] M_T	M_y	M_z	Bijbehorend Belastingsgeval
96	RC1			Max V_y	-0.79	▷ 0.19	0.66	-1.69	3.36	0.85	BC 18
				Min V_y	7.66	▷ -1.19	0.30	0.04	1.66	0.31	BC 21
				Max V_z	4.96	-0.30	▷ 4.37	-2.84	6.52	2.64	BC 9
				Min V_z	-5.45	-0.10	▷ -1.55	1.11	-2.86	-1.28	BC 14
				Max M_T	-1.70	-0.33	1.04	▷ 2.14	-3.49	-1.14	BC 23
				Min M_T	3.41	-0.20	3.63	▷ -3.18	6.57	2.47	BC 12
				Max M_y	4.61	-0.29	3.81	-2.99	▷ 6.81	2.77	BC 13
				Min M_y	-4.07	-0.15	0.68	1.77	▷ -4.00	-1.73	BC 22
				Max M_z	4.61	-0.29	3.81	-2.99	6.81	▷ 2.77	BC 13
				Min M_z	-4.07	-0.15	0.68	1.77	-4.00	▷ -1.73	BC 22
		67	1.290	Max N	▷ 7.90	-0.71	3.55	-2.25	6.11	2.15	BC 5
			Rechts	Min N	▷ -5.45	-0.10	-1.55	1.11	-2.86	-1.28	BC 14
				Max V_y	-0.79	▷ 0.19	0.66	-1.69	3.36	0.85	BC 18
				Min V_y	7.66	▷ -1.19	0.30	0.04	1.66	0.31	BC 21
				Max V_z	4.96	-0.30	▷ 4.37	-2.84	6.52	2.64	BC 9
				Min V_z	-5.45	-0.10	▷ -1.55	1.11	-2.86	-1.28	BC 14
				Max M_T	-1.70	-0.33	1.04	▷ 2.14	-3.49	-1.14	BC 23
				Min M_T	3.41	-0.20	3.63	▷ -3.18	6.57	2.47	BC 12
				Max M_y	4.61	-0.29	3.81	-2.99	▷ 6.81	2.77	BC 13
				Min M_y	-4.07	-0.15	0.68	1.77	▷ -4.00	-1.73	BC 22
				Max M_z	4.61	-0.29	3.81	-2.99	6.81	▷ 2.77	BC 13
				Min M_z	-4.07	-0.15	0.68	1.77	-4.00	▷ -1.73	BC 22
97	RC1	67	0.000	Max N	▷ 8.41	-3.90	-0.25	-0.28	1.59	-0.25	BC 21
			Links	Min N	▷ -5.17	-1.80	1.35	2.86	-2.71	-1.37	BC 14
				Max V_y	2.93	▷ 12.17	-1.68	-6.48	6.04	2.73	BC 8
				Min V_y	8.41	▷ -3.90	-0.25	-0.28	1.59	-0.25	BC 21
				Max V_z	-1.40	-1.51	▷ 3.89	3.77	-3.37	-1.24	BC 23
				Min V_z	0.14	10.73	▷ -2.67	-5.89	5.78	2.36	BC 6
				Max M_T	-1.40	-1.51	3.89	▷ 3.77	-3.37	-1.24	BC 23
				Min M_T	2.63	11.82	-2.23	▷ -6.62	6.34	2.81	BC 12
				Max M_y	3.98	11.28	-2.06	-6.46	▷ 6.57	3.01	BC 13
				Min M_y	-4.06	-0.40	3.56	3.48	▷ -3.86	-1.62	BC 22
				Max M_z	3.98	11.28	-2.06	-6.46	6.57	▷ 3.01	BC 13
				Min M_z	-4.06	-0.40	3.56	3.48	-3.86	▷ -1.62	BC 22
			0.000	Max N	▷ 8.41	-3.90	-0.25	-0.28	1.59	-0.25	BC 21
			Rechts	Min N	▷ -5.17	-1.80	1.35	2.86	-2.71	-1.37	BC 14
				Max V_y	2.93	▷ 12.17	-1.68	-6.48	6.04	2.73	BC 8
				Min V_y	8.41	▷ -3.90	-0.25	-0.28	1.59	-0.25	BC 21
				Max V_z	-1.40	-1.51	▷ 3.89	3.77	-3.37	-1.24	BC 23
				Min V_z	0.14	10.73	▷ -2.67	-5.89	5.78	2.36	BC 6
				Max M_T	-1.40	-1.51	3.89	▷ 3.77	-3.37	-1.24	BC 23
				Min M_T	2.63	11.82	-2.23	▷ -6.62	6.34	2.81	BC 12
				Max M_y	3.98	11.28	-2.06	-6.46	▷ 6.57	3.00	BC 13
				Min M_y	-4.06	-0.40	3.56	3.48	▷ -3.86	-1.62	BC 22
				Max M_z	3.98	11.28	-2.06	-6.46	6.57	▷ 3.00	BC 13
				Min M_z	-4.06	-0.40	3.56	3.48	-3.86	▷ -1.62	BC 22
			0.583	Max N	▷ 8.48	-3.99	-0.46	-0.28	1.39	2.05	BC 21
			Links	Min N	▷ -5.11	-2.31	1.46	2.86	-1.92	-0.18	BC 14
				Max V_y	3.10	▷ 11.71	-2.35	-6.52	4.92	-4.24	BC 8
				Min V_y	8.48	▷ -3.99	-0.46	-0.28	1.39	2.05	BC 21
				Max V_z	-1.33	-1.59	▷ 4.00	3.75	-1.10	-0.33	BC 23
				Min V_z	0.26	10.11	▷ -3.30	-5.94	4.09	-3.72	BC 6
				Max M_T	-1.33	-1.59	4.00	▷ 3.75	-1.10	-0.33	BC 23
				Min M_T	2.80	11.36	-2.90	▷ -6.66	4.90	-3.95	BC 12
				Max M_y	6.53	9.80	-2.30	-6.31	▷ 5.29	-3.06	BC 11
				Min M_y	-5.11	-2.31	1.46	2.86	▷ -1.92	-0.18	BC 14
				Max M_z	8.48	-3.99	-0.46	-0.28	1.39	▷ 2.05	BC 21
				Min M_z	0.86	10.82	-2.20	-5.64	4.14	▷ -4.30	BC 2
			0.583	Max N	▷ 8.48	-3.99	-0.46	-0.28	1.39	2.05	BC 21
			Rechts	Min N	▷ -5.11	-2.31	1.46	2.86	-1.92	-0.18	BC 14
				Max V_y	3.10	▷ 11.71	-2.35	-6.52	4.92	-4.24	BC 8
				Min V_y	8.48	▷ -3.99	-0.46	-0.28	1.39	2.05	BC 21
				Max V_z	-1.33	-1.59	▷ 4.00	3.75	-1.10	-0.33	BC 23
				Min V_z	0.26	10.11	▷ -3.30	-5.94	4.09	-3.72	BC 6
				Max M_T	-1.33	-1.59	4.00	▷ 3.75	-1.10	-0.33	BC 23
				Min M_T	2.80	11.36	-2.90	▷ -6.66	4.90	-3.95	BC 12
				Max M_y	6.53	9.80	-2.30	-6.31	▷ 5.29	-3.06	BC 11
				Min M_y	-5.11	-2.31	1.46	2.86	▷ -1.92	-0.18	BC 14
				Max M_z	8.48	-3.99	-0.46	-0.28	1.39	▷ 2.05	BC 21
				Min M_z	0.86	10.82	-2.20	-5.64	4.14	▷ -4.30	BC 2
			0.645	Max N	▷ 8.49	-4.00	-0.48	-0.28	1.36	2.30	BC 21
			Links	Min N	▷ -5.11	-2.36	1.50	2.86	-1.83	-0.03	BC 14
				Max V_y	3.13	▷ 11.64	-2.47	-6.52	4.77	-4.97	BC 8
				Min V_y	8.49	▷ -4.00	-0.48	-0.28	1.36	2.30	BC 21
				Max V_z	-1.32	-1.60	▷ 4.03	3.75	-0.85	-0.23	BC 23
				Min V_z	0.29	10.03	▷ -3.41	-5.94	3.88	-4.35	BC 6
				Max M_T	-1.32	-1.60	4.03	▷ 3.75	-0.85	-0.23	BC 23
				Min M_T	2.82	11.29	-3.02	▷ -6.67	4.71	-4.66	BC 12
				Max M_y	6.56	9.75	-2.43	-6.32	▷ 5.14	-3.67	BC 11
				Min M_y	-5.11	-2.36	1.50	2.86	▷ -1.83	-0.03	BC 14
				Max M_z	8.49	-4.00	-0.48	-0.28	1.36	▷ 2.30	BC 21
				Min M_z	3.13	11.64	-2.47	-6.52	4.77	▷ -4.97	BC 8
			0.645	Max N	▷ 8.49	-4.00	-0.48	-0.28	1.36	2.30	BC 21
			Rechts	Min N	▷ -5.11	-2.36	1.50	2.86	-1.83	-0.03	BC 14

4.12 DOORSNEDES - SNEDEKRACHTEN

Resultaatcombinaties

Staaf No.	RC	Knoop No.	Snede x [m]		Krachten [kN] N	V_y	V_z	Momenten [kNm] M_T	M_y	M_z	Bijbehorend Belastingsgeval
97	RC1			Max V_y	3.13	▷ 11.64	-2.47	-6.52	4.77	-4.97	BC 8
				Min V_y	8.49	▷ -4.00	-0.48	-0.28	1.36	2.30	BC 21
				Max V_z	-1.32	-1.60	▷ 4.03	3.75	-0.85	-0.23	BC 23
				Min V_z	0.29	10.03	▷ -3.41	-5.94	3.88	-4.35	BC 6
				Max M_T	-1.32	-1.60	4.03	▷ 3.75	-0.85	-0.23	BC 23
				Min M_T	2.82	11.29	-3.02	▷ -6.67	4.71	-4.66	BC 12
				Max M_y	6.56	9.75	-2.43	-6.32	▷ 5.14	-3.67	BC 11
				Min M_y	-5.11	-2.36	1.50	2.86	▷ -1.83	-0.03	BC 14
				Max M_z	8.49	-4.00	-0.48	-0.28	1.36	▷ 2.30	BC 21
				Min M_z	3.13	11.64	-2.47	-6.52	4.77	▷ -4.97	BC 8
			1.290	Max N	▷ 8.56	-4.10	-0.70	-0.28	0.97	4.91	BC 21
			Links	Min N	▷ -5.04	-2.92	1.60	2.85	-0.80	1.68	BC 14
				Max V_y	3.30	▷ 11.13	-3.23	-6.56	2.87	-12.29	BC 8
				Min V_y	8.56	▷ -4.10	-0.70	-0.28	0.97	4.91	BC 21
				Max V_z	-1.25	-1.69	▷ 4.13	3.73	1.81	0.83	BC 23
				Min V_z	0.42	9.34	▷ -4.11	-6.00	1.40	-10.58	BC 6
				Max M_T	-1.25	-1.69	4.13	▷ 3.73	1.81	0.83	BC 23
				Min M_T	3.00	10.77	-3.78	▷ -6.72	2.45	-11.74	BC 12
				Max M_y	4.66	11.06	-3.06	-6.40	▷ 3.32	-11.70	BC 9
				Min M_y	-5.04	-2.92	1.60	2.85	▷ -0.80	1.68	BC 14
				Max M_z	8.56	-4.10	-0.70	-0.28	0.97	▷ 4.91	BC 21
				Min M_z	3.30	11.13	-3.23	-6.56	2.87	▷ -12.29	BC 8
		40	1.290	Max N	▷ 8.56	-4.10	-0.70	-0.28	0.97	4.91	BC 21
			Rechts	Min N	▷ -5.04	-2.92	1.60	2.85	-0.80	1.68	BC 14
				Max V_y	3.30	▷ 11.13	-3.23	-6.56	2.87	-12.29	BC 8
				Min V_y	8.56	▷ -4.10	-0.70	-0.28	0.97	4.91	BC 21
				Max V_z	-1.25	-1.69	▷ 4.13	3.73	1.81	0.83	BC 23
				Min V_z	0.42	9.34	▷ -4.11	-6.00	1.40	-10.58	BC 6
				Max M_T	-1.25	-1.69	4.13	▷ 3.73	1.81	0.83	BC 23
				Min M_T	3.00	10.77	-3.78	▷ -6.72	2.45	-11.74	BC 12
				Max M_y	4.66	11.06	-3.06	-6.40	▷ 3.32	-11.70	BC 9
				Min M_y	-5.04	-2.92	1.60	2.85	▷ -0.80	1.68	BC 14
				Max M_z	8.56	-4.10	-0.70	-0.28	0.97	▷ 4.91	BC 21
				Min M_z	3.30	11.13	-3.23	-6.56	2.87	▷ -12.29	BC 8
98	RC1	68	0.000	Max N	▷ 5.72	1.30	12.54	-0.45	-13.55	4.54	BC 9
			Links	Min N	▷ -3.83	-1.47	-3.97	0.59	3.45	-2.55	BC 14
				Max V_y	3.99	▷ 1.60	7.75	-0.47	-9.03	4.16	BC 5
				Min V_y	-3.83	▷ -1.47	-3.97	0.59	3.45	-2.55	BC 14
				Max V_z	5.68	0.78	▷ 12.68	-0.19	-13.65	3.96	BC 8
				Min V_z	-3.77	-0.45	▷ -4.25	0.08	3.64	-1.39	BC 15
				Max M_T	1.82	-0.58	4.23	▷ 0.77	-7.13	-0.20	BC 18
				Min M_T	-1.43	-0.19	-0.06	▷ -0.67	3.74	0.89	BC 23
				Max M_y	-1.43	-0.19	-0.06	-0.67	▷ 3.74	0.89	BC 23
				Min M_y	5.07	0.71	11.64	-0.01	▷ -13.69	3.38	BC 12
				Max M_z	5.12	1.55	11.00	-0.51	-12.16	▷ 4.67	BC 11
				Min M_z	-3.83	-1.47	-3.97	0.59	3.45	▷ -2.55	BC 14
			0.000	Max N	▷ 5.72	1.30	12.54	-0.45	-13.55	4.54	BC 9
			Rechts	Min N	▷ -3.83	-1.47	-3.97	0.59	3.45	-2.55	BC 14
				Max V_y	3.99	▷ 1.60	7.75	-0.47	-9.03	4.16	BC 5
				Min V_y	-3.83	▷ -1.47	-3.97	0.59	3.45	-2.55	BC 14
				Max V_z	5.68	0.78	▷ 12.68	-0.19	-13.65	3.96	BC 8
				Min V_z	-3.77	-0.45	▷ -4.25	0.08	3.64	-1.39	BC 15
				Max M_T	1.82	-0.58	4.23	▷ 0.77	-7.13	-0.20	BC 18
				Min M_T	-1.43	-0.19	-0.06	▷ -0.67	3.74	0.89	BC 23
				Max M_y	-1.43	-0.19	-0.06	-0.67	▷ 3.74	0.89	BC 23
				Min M_y	5.07	0.71	11.64	-0.01	▷ -13.69	3.38	BC 12
				Max M_z	5.12	1.55	11.00	-0.51	-12.16	▷ 4.67	BC 11
				Min M_z	-3.83	-1.47	-3.97	0.59	3.45	▷ -2.55	BC 14
			0.583	Max N	▷ 5.91	1.01	11.78	-0.43	-6.42	3.85	BC 9
			Links	Min N	▷ -3.77	-1.54	-3.87	0.59	1.15	-1.67	BC 14
				Max V_y	4.12	▷ 1.38	7.22	-0.47	-4.63	3.29	BC 5
				Min V_y	-3.77	▷ -1.54	-3.87	0.59	1.15	-1.67	BC 14
				Max V_z	5.87	0.51	▷ 11.93	-0.18	-6.42	3.57	BC 8
				Min V_z	-3.72	-0.54	▷ -4.15	0.08	1.16	-1.11	BC 15
				Max M_T	1.91	-0.69	3.92	▷ 0.76	-4.75	0.17	BC 18
				Min M_T	-1.39	-0.28	-0.27	▷ -0.67	3.65	1.02	BC 23
				Max M_y	-1.39	-0.28	-0.27	-0.67	▷ 3.65	1.02	BC 23
				Min M_y	5.27	0.44	10.96	-0.00	▷ -7.06	3.03	BC 12
				Max M_z	5.91	1.01	11.78	-0.43	-6.42	▷ 3.85	BC 9
				Min M_z	-3.77	-1.54	-3.87	0.59	1.15	▷ -1.67	BC 14
			0.583	Max N	▷ 5.91	1.01	11.78	-0.43	-6.42	3.85	BC 9
			Rechts	Min N	▷ -3.77	-1.54	-3.87	0.59	1.15	-1.67	BC 14
				Max V_y	4.12	▷ 1.38	7.22	-0.47	-4.63	3.29	BC 5
				Min V_y	-3.77	▷ -1.54	-3.87	0.59	1.15	-1.67	BC 14
				Max V_z	5.87	0.51	▷ 11.93	-0.18	-6.42	3.57	BC 8
				Min V_z	-3.72	-0.54	▷ -4.15	0.08	1.16	-1.11	BC 15
				Max M_T	1.91	-0.69	3.92	▷ 0.76	-4.75	0.17	BC 18
				Min M_T	-1.39	-0.28	-0.27	▷ -0.67	3.65	1.02	BC 23
				Max M_y	-1.39	-0.28	-0.27	-0.67	▷ 3.65	1.02	BC 23
				Min M_y	5.27	0.44	10.96	-0.00	▷ -7.06	3.03	BC 12
				Max M_z	5.91	1.01	11.78	-0.43	-6.42	▷ 3.85	BC 9
				Min M_z	-3.77	-1.54	-3.87	0.59	1.15	▷ -1.67	BC 14
			0.645	Max N	▷ 5.94	0.96	11.64	-0.43	-5.69	3.79	BC 9
			Links	Min N	▷ -3.76	-1.55	-3.83	0.59	0.91	-1.57	BC 14

4.12 DOORSNEDES - SNEDEKRACHTEN

Resultaatcombinaties

Staaf No.	RC	Knoop No.	Snede x [m]		Krachten [kN] N	V_y	V_z	Momenten [kNm] M_T	M_y	M_z	Bijbehorend Belastingsgeval
98	RC1			Max V_y	4.15	▷ 1.34	7.13	-0.47	-4.19	3.20	BC 5
				Min V_y	-3.76	▷ -1.55	-3.83	0.59	0.91	-1.57	BC 14
				Max V_z	5.91	0.45	▷ 11.78	-0.18	-5.69	3.54	BC 8
				Min V_z	-3.72	-0.55	▷ -4.11	0.08	0.90	-1.07	BC 15
				Max M_T	1.92	-0.71	3.88	▷ 0.76	-4.51	0.21	BC 18
				Min M_T	-1.39	-0.29	-0.30	▷ -0.67	3.63	1.04	BC 23
				Max M_y	-1.39	-0.29	-0.30	-0.67	▷ 3.63	1.04	BC 23
				Min M_y	4.15	0.71	8.12	0.01	▷ -6.40	2.21	BC 7
				Max M_z	5.94	0.96	11.64	-0.43	-5.69	▷ 3.79	BC 9
				Min M_z	-3.76	-1.55	-3.83	0.59	0.91	▷ -1.57	BC 14
			0.645	Max N	▷ 5.94	0.96	11.64	-0.43	-5.69	3.79	BC 9
			Rechts	Min N	▷ -3.76	-1.55	-3.83	0.59	0.91	-1.57	BC 14
				Max V_y	4.15	▷ 1.34	7.13	-0.47	-4.19	3.20	BC 5
				Min V_y	-3.76	▷ -1.55	-3.83	0.59	0.91	-1.57	BC 14
				Max V_z	5.91	0.45	▷ 11.78	-0.18	-5.69	3.54	BC 8
				Min V_z	-3.72	-0.55	▷ -4.11	0.08	0.90	-1.07	BC 15
				Max M_T	1.92	-0.71	3.88	▷ 0.76	-4.51	0.21	BC 18
				Min M_T	-1.39	-0.29	-0.30	▷ -0.67	3.63	1.04	BC 23
				Max M_y	-1.39	-0.29	-0.30	-0.67	▷ 3.63	1.04	BC 23
				Min M_y	4.15	0.71	8.12	0.01	▷ -6.40	2.21	BC 7
				Max M_z	5.94	0.96	11.64	-0.43	-5.69	▷ 3.79	BC 9
				Min M_z	-3.76	-1.55	-3.83	0.59	0.91	▷ -1.57	BC 14
			1.290	Max N	▷ 6.14	0.63	10.78	-0.42	1.47	3.30	BC 9
			Links	Min N	▷ -3.70	-1.63	-3.75	0.59	-1.51	-0.54	BC 14
				Max V_y	4.30	▷ 1.08	6.52	-0.46	0.18	2.44	BC 5
				Min V_y	-3.70	▷ -1.63	-3.75	0.59	-1.51	-0.54	BC 14
				Max V_z	6.12	0.13	▷ 10.93	-0.16	1.57	3.37	BC 8
				Min V_z	-3.67	-0.64	▷ -4.03	0.08	-1.69	-0.69	BC 15
				Max M_T	2.02	-0.83	3.53	▷ 0.76	-2.13	0.71	BC 18
				Min M_T	-1.34	-0.38	-0.53	▷ -0.66	3.36	1.26	BC 23
				Max M_y	-1.37	-1.38	-0.24	-0.16	▷ 3.54	1.40	BC 22
				Min M_y	2.05	0.16	3.25	0.25	▷ -2.32	0.57	BC 19
				Max M_z	6.12	0.13	10.93	-0.16	1.57	▷ 3.37	BC 8
				Min M_z	-3.67	-0.64	-4.03	0.08	-1.69	▷ -0.69	BC 15
		69	1.290	Max N	▷ 6.14	0.63	10.78	-0.42	1.47	3.30	BC 9
			Rechts	Min N	▷ -3.70	-1.63	-3.75	0.59	-1.51	-0.54	BC 14
				Max V_y	4.30	▷ 1.08	6.52	-0.46	0.18	2.44	BC 5
				Min V_y	-3.70	▷ -1.63	-3.75	0.59	-1.51	-0.54	BC 14
				Max V_z	6.12	0.13	▷ 10.93	-0.16	1.57	3.37	BC 8
				Min V_z	-3.67	-0.64	▷ -4.03	0.08	-1.69	-0.69	BC 15
				Max M_T	2.02	-0.83	3.53	▷ 0.76	-2.13	0.71	BC 18
				Min M_T	-1.34	-0.38	-0.53	▷ -0.66	3.36	1.26	BC 23
				Max M_y	-1.37	-1.38	-0.24	-0.16	▷ 3.54	1.40	BC 22
				Min M_y	2.05	0.16	3.25	0.25	▷ -2.32	0.57	BC 19
				Max M_z	6.12	0.13	10.93	-0.16	1.57	▷ 3.37	BC 8
				Min M_z	-3.67	-0.64	-4.03	0.08	-1.69	▷ -0.69	BC 15
99	RC1	69	0.000	Max N	▷ 6.41	1.30	4.89	-3.13	1.30	3.72	BC 8
			Links	Min N	▷ -3.45	-0.42	-1.31	1.46	-1.56	-1.09	BC 15
				Max V_y	5.77	▷ 1.76	4.24	-2.96	0.77	3.54	BC 11
				Min V_y	-3.33	▷ -1.04	-1.07	1.90	-1.37	-1.12	BC 14
				Max V_z	6.41	1.30	▷ 4.89	-3.13	1.30	3.72	BC 8
				Min V_z	-3.45	-0.42	▷ -1.31	1.46	-1.56	-1.09	BC 15
				Max M_T	-3.33	-1.04	-1.07	▷ 1.90	-1.37	-1.12	BC 14
				Min M_T	6.35	1.61	4.77	▷ -3.34	1.21	3.74	BC 9
				Max M_y	-1.11	-0.54	-0.85	-0.45	▷ 3.50	0.97	BC 22
				Min M_y	1.88	0.54	2.38	-0.17	▷ -2.34	0.85	BC 19
				Max M_z	6.35	1.61	4.77	-3.34	1.21	▷ 3.74	BC 9
				Min M_z	-3.33	-1.04	-1.07	1.90	-1.37	▷ -1.12	BC 14
			0.000	Max N	▷ 6.41	1.30	4.89	-3.13	1.30	3.72	BC 8
			Rechts	Min N	▷ -3.45	-0.42	-1.31	1.46	-1.56	-1.09	BC 15
				Max V_y	5.77	▷ 1.76	4.24	-2.96	0.77	3.54	BC 11
				Min V_y	-3.33	▷ -1.04	-1.07	1.90	-1.37	-1.12	BC 14
				Max V_z	6.41	1.30	▷ 4.89	-3.13	1.30	3.72	BC 8
				Min V_z	-3.45	-0.42	▷ -1.31	1.46	-1.56	-1.09	BC 15
				Max M_T	-3.33	-1.04	-1.07	▷ 1.90	-1.37	-1.12	BC 14
				Min M_T	6.35	1.61	4.77	▷ -3.34	1.21	3.74	BC 9
				Max M_y	-1.11	-0.54	-0.85	-0.45	▷ 3.50	0.97	BC 22
				Min M_y	1.88	0.54	2.38	-0.17	▷ -2.34	0.85	BC 19
				Max M_z	6.35	1.61	4.77	-3.34	1.21	▷ 3.74	BC 9
				Min M_z	-3.33	-1.04	-1.07	1.90	-1.37	▷ -1.12	BC 14
			0.583	Max N	▷ 6.58	1.03	4.17	-3.12	3.99	3.03	BC 8
			Links	Min N	▷ -3.40	-0.51	-1.21	1.46	-2.32	-0.82	BC 15
				Max V_y	5.94	▷ 1.49	3.60	-2.96	3.10	2.57	BC 11
				Min V_y	-3.27	▷ -1.11	-0.97	1.90	-1.99	-0.49	BC 14
				Max V_z	6.02	0.91	▷ 4.20	-2.56	2.75	2.57	BC 12
				Min V_z	-1.19	-0.01	▷ -1.31	-0.88	2.61	0.98	BC 23
				Max M_T	-3.27	-1.11	-0.97	▷ 1.90	-1.99	-0.49	BC 14
				Min M_T	6.52	1.34	4.05	▷ -3.33	3.83	2.86	BC 9
				Max M_y	6.58	1.03	4.17	-3.12	▷ 3.99	3.03	BC 8
				Min M_y	-1.76	0.82	-1.15	1.23	▷ -2.80	-0.61	BC 21
				Max M_z	6.58	1.03	4.17	-3.12	3.99	▷ 3.03	BC 8
				Min M_z	-3.40	-0.51	-1.21	1.46	-2.32	▷ -0.82	BC 15
			0.583	Max N	▷ 6.58	1.03	4.17	-3.12	3.99	3.03	BC 8
			Rechts	Min N	▷ -3.40	-0.51	-1.21	1.46	-2.32	-0.82	BC 15

4.12 DOORSNEDES - SNEDEKRACHTEN

Resultaatcombinaties

Staaf No.	RC	Knoop No.	Snede x [m]		Krachten [kN] N	V_y	V_z	Momenten [kNm] M_T	M_y	M_z	Bijbehorend Belastingsgeval
99	RC1			Max V_y	5.94	▷ 1.49	3.60	-2.96	3.10	2.57	BC 11
				Min V_y	-3.27	▷ -1.11	-0.97	1.90	-1.99	-0.49	BC 14
				Max V_z	6.02	0.91	▷ 4.20	-2.56	2.75	2.57	BC 12
				Min V_z	-1.19	-0.01	▷ -1.31	-0.88	2.61	0.98	BC 23
				Max M_T	-3.27	-1.11	-0.97	▷ 1.90	-1.99	-0.49	BC 14
				Min M_T	6.52	1.34	4.05	▷ -3.33	3.83	2.86	BC 9
				Max M_y	6.58	1.03	4.17	-3.12	▷ 3.99	3.03	BC 8
				Min M_y	-1.76	0.82	-1.15	1.23	▷ -2.80	-0.61	BC 21
				Max M_z	6.58	1.03	4.17	-3.12	3.99	▷ 3.03	BC 8
				Min M_z	-3.40	-0.51	-1.21	1.46	-2.32	▷ -0.82	BC 15
			0.645	Max N	▷ 6.62	0.98	4.04	-3.12	4.25	2.96	BC 8
			Links	Min N	▷ -3.40	-0.52	-1.17	1.46	-2.39	-0.79	BC 15
				Max V_y	4.45	▷ 1.45	2.48	-2.05	1.87	1.85	BC 5
				Min V_y	-3.27	▷ -1.12	-0.93	1.90	-2.04	-0.42	BC 14
				Max V_z	6.06	0.86	▷ 4.08	-2.56	3.01	2.52	BC 12
				Min V_z	-1.19	-0.02	▷ -1.34	-0.88	2.53	0.99	BC 23
				Max M_T	-3.27	-1.12	-0.93	▷ 1.90	-2.04	-0.42	BC 14
				Min M_T	6.55	1.29	3.92	▷ -3.33	4.08	2.78	BC 9
				Max M_y	6.62	0.98	4.04	-3.12	▷ 4.25	2.96	BC 8
				Min M_y	-1.76	0.80	-1.11	1.23	▷ -2.87	-0.66	BC 21
				Max M_z	6.62	0.98	4.04	-3.12	4.25	▷ 2.96	BC 8
				Min M_z	-3.40	-0.52	-1.17	1.46	-2.39	▷ -0.79	BC 15
			0.645	Max N	▷ 6.62	0.98	4.04	-3.12	4.25	2.96	BC 8
			Rechts	Min N	▷ -3.40	-0.52	-1.17	1.46	-2.39	-0.79	BC 15
				Max V_y	4.45	▷ 1.45	2.48	-2.05	1.87	1.85	BC 5
				Min V_y	-3.27	▷ -1.12	-0.93	1.90	-2.04	-0.42	BC 14
				Max V_z	6.06	0.86	▷ 4.08	-2.56	3.01	2.52	BC 12
				Min V_z	-1.19	-0.02	▷ -1.34	-0.88	2.53	0.99	BC 23
				Max M_T	-3.27	-1.12	-0.93	▷ 1.90	-2.04	-0.42	BC 14
				Min M_T	6.55	1.29	3.92	▷ -3.33	4.08	2.78	BC 9
				Max M_y	6.62	0.98	4.04	-3.12	▷ 4.25	2.96	BC 8
				Min M_y	-1.76	0.80	-1.11	1.23	▷ -2.87	-0.66	BC 21
				Max M_z	6.62	0.98	4.04	-3.12	4.25	▷ 2.96	BC 8
				Min M_z	-3.40	-0.52	-1.17	1.46	-2.39	▷ -0.79	BC 15
			1.290	Max N	▷ 6.81	0.68	3.22	-3.11	6.53	2.45	BC 8
			Links	Min N	▷ -3.35	-0.61	-1.09	1.46	-3.09	-0.42	BC 15
				Max V_y	4.59	▷ 1.21	1.90	-2.05	3.24	1.01	BC 5
				Min V_y	-3.20	▷ -1.20	-0.85	1.90	-2.59	0.33	BC 14
				Max V_z	6.26	0.56	▷ 3.34	-2.56	5.34	2.08	BC 12
				Min V_z	-1.14	-0.11	▷ -1.57	-0.88	1.59	1.03	BC 23
				Max M_T	-3.20	-1.20	-0.85	▷ 1.90	-2.59	0.33	BC 14
				Min M_T	6.74	0.98	3.10	▷ -3.33	6.27	2.08	BC 9
				Max M_y	6.81	0.68	3.22	-3.11	▷ 6.53	2.45	BC 8
				Min M_y	-1.71	0.71	-1.03	1.23	▷ -3.53	-1.15	BC 21
				Max M_z	5.89	0.31	2.87	-2.37	5.76	▷ 2.55	BC 2
				Min M_z	-1.71	0.71	-1.03	1.23	-3.53	▷ -1.15	BC 21
		70	1.290	Max N	▷ 6.81	0.68	3.22	-3.11	6.53	2.45	BC 8
			Rechts	Min N	▷ -3.35	-0.61	-1.09	1.46	-3.09	-0.42	BC 15
				Max V_y	4.59	▷ 1.21	1.90	-2.05	3.24	1.01	BC 5
				Min V_y	-3.20	▷ -1.20	-0.85	1.90	-2.59	0.33	BC 14
				Max V_z	6.26	0.56	▷ 3.34	-2.56	5.34	2.08	BC 12
				Min V_z	-1.14	-0.11	▷ -1.57	-0.88	1.59	1.03	BC 23
				Max M_T	-3.20	-1.20	-0.85	▷ 1.90	-2.59	0.33	BC 14
				Min M_T	6.74	0.98	3.10	▷ -3.33	6.27	2.08	BC 9
				Max M_y	6.81	0.68	3.22	-3.11	▷ 6.53	2.45	BC 8
				Min M_y	-1.71	0.71	-1.03	1.23	▷ -3.53	-1.15	BC 21
				Max M_z	5.89	0.31	2.87	-2.37	5.76	▷ 2.55	BC 2
				Min M_z	-1.71	0.71	-1.03	1.23	-3.53	▷ -1.15	BC 21
100	RC1	70	0.000	Max N	▷ 5.78	14.00	-2.68	-6.52	6.32	3.07	BC 8
			Links	Min N	▷ -2.65	-4.86	1.69	3.07	-2.96	-0.88	BC 15
				Max V_y	5.78	▷ 14.00	-2.68	-6.52	6.32	3.07	BC 8
				Min V_y	-2.65	▷ -4.86	1.69	3.07	-2.96	-0.88	BC 15
				Max V_z	-1.21	-1.66	▷ 1.99	3.30	-2.88	-0.57	BC 20
				Min V_z	5.67	13.76	▷ -2.78	-6.70	6.07	2.77	BC 9
				Max M_T	-2.44	-4.39	1.89	▷ 3.45	-2.46	-0.28	BC 14
				Min M_T	5.67	13.76	-2.78	▷ -6.70	6.07	2.77	BC 9
				Max M_y	5.78	14.00	-2.68	-6.52	▷ 6.32	3.07	BC 8
				Min M_y	-1.42	-2.13	1.78	2.92	▷ -3.38	-1.18	BC 21
				Max M_z	4.87	11.87	-2.25	-5.34	5.58	▷ 3.10	BC 2
				Min M_z	-1.42	-2.13	1.78	2.92	-3.38	▷ -1.18	BC 21
			0.000	Max N	▷ 5.78	14.00	-2.68	-6.52	6.32	3.07	BC 8
			Rechts	Min N	▷ -2.65	-4.86	1.69	3.07	-2.96	-0.88	BC 15
				Max V_y	5.78	▷ 14.00	-2.68	-6.52	6.32	3.07	BC 8
				Min V_y	-2.65	▷ -4.86	1.69	3.07	-2.96	-0.88	BC 15
				Max V_z	-1.21	-1.66	▷ 1.99	3.30	-2.88	-0.57	BC 20
				Min V_z	5.67	13.76	▷ -2.78	-6.70	6.07	2.77	BC 9
				Max M_T	-2.44	-4.39	1.89	▷ 3.45	-2.46	-0.28	BC 14
				Min M_T	5.67	13.76	-2.78	▷ -6.70	6.07	2.77	BC 9
				Max M_y	5.78	14.00	-2.68	-6.52	▷ 6.32	3.07	BC 8
				Min M_y	-1.42	-2.13	1.78	2.92	▷ -3.38	-1.18	BC 21
				Max M_z	4.87	11.87	-2.25	-5.34	5.58	▷ 3.10	BC 2
				Min M_z	-1.42	-2.13	1.78	2.92	-3.38	▷ -1.18	BC 21
			0.583	Max N	▷ 5.94	13.76	-3.35	-6.56	4.62	-5.03	BC 8
			Links	Min N	▷ -2.60	-4.95	1.79	3.07	-1.97	1.97	BC 15

4.12 DOORSNEDES - SNEDEKRACHTEN

Resultaatcombinaties

Staaf No.	RC	Knoop No.	Snede x [m]		Krachten [kN] N	V_y	V_z	Momenten [kNm] M_T	M_y	M_z	Bijbehorend Belastingsgeval
100	RC1			Max V_y	5.94	▷ 13.76	-3.35	-6.56	4.62	-5.03	BC 8
				Min V_y	-2.60	▷ -4.95	1.79	3.07	-1.97	1.97	BC 15
				Max V_z	-1.16	-1.73	▷ 2.09	3.30	-1.72	0.41	BC 20
				Min V_z	5.83	13.52	▷ -3.45	-6.75	4.31	-5.19	BC 9
				Max M_T	-2.39	-4.46	2.00	▷ 3.44	-1.35	2.30	BC 14
				Min M_T	5.83	13.52	-3.45	▷ -6.75	4.31	-5.19	BC 9
				Max M_y	5.94	13.76	-3.35	-6.56	▷ 4.62	-5.03	BC 8
				Min M_y	-1.37	-2.21	1.88	2.93	▷ -2.34	0.09	BC 21
				Max M_z	-2.39	-4.46	2.00	3.44	-1.35	▷ 2.30	BC 14
				Min M_z	5.83	13.52	-3.45	-6.75	4.31	▷ -5.19	BC 9
			0.583	Max N	▷ 5.94	13.76	-3.35	-6.56	4.62	-5.03	BC 8
			Rechts	Min N	▷ -2.60	-4.95	1.79	3.07	-1.97	1.97	BC 15
				Max V_y	5.94	▷ 13.76	-3.35	-6.56	4.62	-5.03	BC 8
				Min V_y	-2.60	▷ -4.95	1.79	3.07	-1.97	1.97	BC 15
				Max V_z	-1.16	-1.73	▷ 2.09	3.30	-1.72	0.41	BC 20
				Min V_z	5.83	13.52	▷ -3.45	-6.75	4.31	-5.19	BC 9
				Max M_T	-2.39	-4.46	2.00	▷ 3.44	-1.35	2.30	BC 14
				Min M_T	5.83	13.52	-3.45	▷ -6.75	4.31	-5.19	BC 9
				Max M_y	5.94	13.76	-3.35	-6.56	▷ 4.62	-5.03	BC 8
				Min M_y	-1.37	-2.21	1.88	2.93	▷ -2.34	0.09	BC 21
				Max M_z	-2.39	-4.46	2.00	3.44	-1.35	▷ 2.30	BC 14
				Min M_z	5.83	13.52	-3.45	-6.75	4.31	▷ -5.19	BC 9
			0.645	Max N	▷ 5.97	13.72	-3.47	-6.57	4.41	-5.89	BC 8
			Links	Min N	▷ -2.60	-4.96	1.83	3.07	-1.86	2.28	BC 15
				Max V_y	5.97	▷ 13.72	-3.47	-6.57	4.41	-5.89	BC 8
				Min V_y	-2.60	▷ -4.96	1.83	3.07	-1.86	2.28	BC 15
				Max V_z	-1.15	-1.74	▷ 2.12	3.30	-1.59	0.52	BC 20
				Min V_z	5.85	13.47	▷ -3.57	-6.75	4.09	-6.03	BC 9
				Max M_T	-2.38	-4.47	2.03	▷ 3.44	-1.23	2.58	BC 14
				Min M_T	5.85	13.47	-3.57	▷ -6.75	4.09	-6.03	BC 9
				Max M_y	5.97	13.72	-3.47	-6.57	▷ 4.41	-5.89	BC 8
				Min M_y	-1.37	-2.22	1.92	2.93	▷ -2.22	0.22	BC 21
				Max M_z	-2.38	-4.47	2.03	3.44	-1.23	▷ 2.58	BC 14
				Min M_z	5.85	13.47	-3.57	-6.75	4.09	▷ -6.03	BC 9
			0.645	Max N	▷ 5.97	13.72	-3.47	-6.57	4.41	-5.89	BC 8
			Rechts	Min N	▷ -2.60	-4.96	1.83	3.07	-1.86	2.28	BC 15
				Max V_y	5.97	▷ 13.72	-3.47	-6.57	4.41	-5.89	BC 8
				Min V_y	-2.60	▷ -4.96	1.83	3.07	-1.86	2.28	BC 15
				Max V_z	-1.15	-1.74	▷ 2.12	3.30	-1.59	0.52	BC 20
				Min V_z	5.85	13.47	▷ -3.57	-6.75	4.09	-6.03	BC 9
				Max M_T	-2.38	-4.47	2.03	▷ 3.44	-1.23	2.58	BC 14
				Min M_T	5.85	13.47	-3.57	▷ -6.75	4.09	-6.03	BC 9
				Max M_y	5.97	13.72	-3.47	-6.57	▷ 4.41	-5.89	BC 8
				Min M_y	-1.37	-2.22	1.92	2.93	▷ -2.22	0.22	BC 21
				Max M_z	-2.38	-4.47	2.03	3.44	-1.23	▷ 2.58	BC 14
				Min M_z	5.85	13.47	-3.57	-6.75	4.09	▷ -6.03	BC 9
			1.290	Max N	▷ 6.13	13.45	-4.23	-6.61	1.86	-14.62	BC 8
			Links	Min N	▷ -2.55	-5.05	1.92	3.07	-0.62	5.51	BC 15
				Max V_y	6.13	▷ 13.45	-4.23	-6.61	1.86	-14.62	BC 8
				Min V_y	-2.55	▷ -5.05	1.92	3.07	-0.62	5.51	BC 15
				Max V_z	-1.09	-1.82	▷ 2.21	3.30	-0.16	1.67	BC 20
				Min V_z	6.01	13.20	▷ -4.33	-6.80	1.48	-14.60	BC 9
				Max M_T	-2.32	-4.55	2.12	▷ 3.44	0.14	5.49	BC 14
				Min M_T	6.01	13.20	-4.33	▷ -6.80	1.48	-14.60	BC 9
				Max M_y	4.35	9.21	-1.43	-3.23	▷ 2.16	-9.94	BC 6
				Min M_y	-0.92	-0.56	-2.63	-1.19	▷ -1.51	1.48	BC 23
				Max M_z	-2.55	-5.05	1.92	3.07	-0.62	▷ 5.51	BC 15
				Min M_z	6.13	13.45	-4.23	-6.61	1.86	▷ -14.62	BC 8
		42	1.290	Max N	▷ 6.13	13.45	-4.23	-6.61	1.86	-14.62	BC 8
			Rechts	Min N	▷ -2.55	-5.05	1.92	3.07	-0.62	5.51	BC 15
				Max V_y	6.13	▷ 13.45	-4.23	-6.61	1.86	-14.62	BC 8
				Min V_y	-2.55	▷ -5.05	1.92	3.07	-0.62	5.51	BC 15
				Max V_z	-1.09	-1.82	▷ 2.21	3.30	-0.16	1.67	BC 20
				Min V_z	6.01	13.20	▷ -4.33	-6.80	1.48	-14.60	BC 9
				Max M_T	-2.32	-4.55	2.12	▷ 3.44	0.14	5.49	BC 14
				Min M_T	6.01	13.20	-4.33	▷ -6.80	1.48	-14.60	BC 9
				Max M_y	4.35	9.21	-1.43	-3.23	▷ 2.16	-9.94	BC 6
				Min M_y	-0.92	-0.56	-2.63	-1.19	▷ -1.51	1.48	BC 23
				Max M_z	-2.55	-5.05	1.92	3.07	-0.62	▷ 5.51	BC 15
				Min M_z	6.13	13.45	-4.23	-6.61	1.86	▷ -14.62	BC 8
101	RC1	71	0.000	Max N	▷ 5.68	0.78	-12.68	0.19	13.65	3.96	BC 8
			Links	Min N	▷ -4.20	-0.42	4.09	-0.22	-3.82	-1.54	BC 15
				Max V_y	3.53	▷ 1.63	-7.92	0.35	8.85	4.02	BC 5
				Min V_y	-3.83	▷ -1.47	3.97	-0.59	-3.45	-2.55	BC 14
				Max V_z	-4.20	-0.42	▷ 4.09	-0.22	-3.82	-1.54	BC 15
				Min V_z	5.68	0.78	▷ -12.68	0.19	13.65	3.96	BC 8
				Max M_T	5.03	1.22	-12.12	▷ 0.52	11.91	4.51	BC 13
				Min M_T	-1.88	-1.11	1.97	▷ -1.24	2.83	-2.71	BC 22
				Max M_y	5.68	0.78	-12.68	0.19	▷ 13.65	3.96	BC 8
				Min M_y	-4.20	-0.42	4.09	-0.22	▷ -3.82	-1.54	BC 15
				Max M_z	4.89	1.56	-11.08	0.44	12.08	▷ 4.60	BC 11
				Min M_z	-1.88	-1.11	1.97	-1.24	2.83	▷ -2.71	BC 22
			0.000	Max N	▷ 5.68	0.78	-12.68	0.19	13.65	3.96	BC 8
			Rechts	Min N	▷ -4.20	-0.42	4.09	-0.22	-3.82	-1.54	BC 15

4.12 DOORSNEDES - SNEDEKRACHTEN

Resultaatcombinaties

Staaf No.	RC	Knoop No.	Snede x [m]		Krachten [kN] N	V_y	V_z	Momenten [kNm] M_T	M_y	M_z	Bijbehorend Belastingsgeval
101	RC1			Max V_y	3.53	▷ 1.63	-7.92	0.35	8.85	4.02	BC 5
				Min V_y	-3.83	▷ -1.47	3.97	-0.59	-3.45	-2.55	BC 14
				Max V_z	-4.20	-0.42	▷ 4.09	-0.22	-3.82	-1.54	BC 15
				Min V_z	5.68	0.78	▷ -12.68	0.19	13.65	3.96	BC 8
				Max M_T	5.03	1.22	-12.12	▷ 0.52	11.91	4.51	BC 13
				Min M_T	-1.88	-1.11	1.97	▷ -1.24	2.83	-2.71	BC 22
				Max M_y	5.68	0.78	-12.68	0.19	▷ 13.65	3.96	BC 8
				Min M_y	-4.20	-0.42	4.09	-0.22	▷ -3.82	-1.54	BC 15
				Max M_z	4.89	1.56	-11.08	0.44	12.08	▷ 4.60	BC 11
				Min M_z	-1.88	-1.11	1.97	-1.24	2.83	▷ -2.71	BC 22
			0.583	Max N	▷ 5.87	0.51	-11.93	0.18	6.42	3.57	BC 8
			Links	Min N	▷ -4.13	-0.50	3.98	-0.22	-1.44	-1.27	BC 15
				Max V_y	3.70	▷ 1.41	-7.39	0.34	4.36	3.12	BC 5
				Min V_y	-3.77	▷ -1.54	3.87	-0.59	-1.15	-1.67	BC 14
				Max V_z	-4.13	-0.50	▷ 3.98	-0.22	-1.44	-1.27	BC 15
				Min V_z	5.87	0.51	▷ -11.93	0.18	6.42	3.57	BC 8
				Max M_T	5.23	0.94	-11.37	▷ 0.51	5.01	3.86	BC 13
				Min M_T	-1.83	-1.18	1.87	▷ -1.24	3.98	-2.04	BC 22
				Max M_y	5.87	0.51	-11.93	0.18	▷ 6.42	3.57	BC 8
				Min M_y	-4.13	-0.50	3.98	-0.22	▷ -1.44	-1.27	BC 15
				Max M_z	5.23	0.94	-11.37	0.51	5.01	▷ 3.86	BC 13
				Min M_z	-1.83	-1.18	1.87	-1.24	3.98	▷ -2.04	BC 22
			0.583	Max N	▷ 5.87	0.51	-11.93	0.18	6.42	3.57	BC 8
			Rechts	Min N	▷ -4.13	-0.50	3.98	-0.22	-1.44	-1.27	BC 15
				Max V_y	3.70	▷ 1.41	-7.39	0.34	4.36	3.12	BC 5
				Min V_y	-3.77	▷ -1.54	3.87	-0.59	-1.15	-1.67	BC 14
				Max V_z	-4.13	-0.50	▷ 3.98	-0.22	-1.44	-1.27	BC 15
				Min V_z	5.87	0.51	▷ -11.93	0.18	6.42	3.57	BC 8
				Max M_T	5.23	0.94	-11.37	▷ 0.51	5.01	3.86	BC 13
				Min M_T	-1.83	-1.18	1.87	▷ -1.24	3.98	-2.04	BC 22
				Max M_y	5.87	0.51	-11.93	0.18	▷ 6.42	3.57	BC 8
				Min M_y	-4.13	-0.50	3.98	-0.22	▷ -1.44	-1.27	BC 15
				Max M_z	5.23	0.94	-11.37	0.51	5.01	▷ 3.86	BC 13
				Min M_z	-1.83	-1.18	1.87	-1.24	3.98	▷ -2.04	BC 22
			0.645	Max N	▷ 5.91	0.45	-11.78	0.18	5.69	3.54	BC 8
			Links	Min N	▷ -4.12	-0.51	3.95	-0.22	-1.19	-1.24	BC 15
				Max V_y	3.72	▷ 1.37	-7.30	0.34	3.90	3.03	BC 5
				Min V_y	-3.76	▷ -1.55	3.83	-0.59	-0.91	-1.57	BC 14
				Max V_z	-4.12	-0.51	▷ 3.95	-0.22	-1.19	-1.24	BC 15
				Min V_z	5.91	0.45	▷ -11.78	0.18	5.69	3.54	BC 8
				Max M_T	5.26	0.88	-11.23	▷ 0.51	4.30	3.80	BC 13
				Min M_T	-1.82	-1.19	1.84	▷ -1.24	4.09	-1.97	BC 22
				Max M_y	5.91	0.45	-11.78	0.18	▷ 5.69	3.54	BC 8
				Min M_y	-4.12	-0.51	3.95	-0.22	▷ -1.19	-1.24	BC 15
				Max M_z	5.26	0.88	-11.23	0.51	4.30	▷ 3.80	BC 13
				Min M_z	-1.82	-1.19	1.84	-1.24	4.09	▷ -1.97	BC 22
			0.645	Max N	▷ 5.91	0.45	-11.78	0.18	5.69	3.54	BC 8
			Rechts	Min N	▷ -4.12	-0.51	3.95	-0.22	-1.19	-1.24	BC 15
				Max V_y	3.72	▷ 1.37	-7.30	0.34	3.90	3.03	BC 5
				Min V_y	-3.76	▷ -1.55	3.83	-0.59	-0.91	-1.57	BC 14
				Max V_z	-4.12	-0.51	▷ 3.95	-0.22	-1.19	-1.24	BC 15
				Min V_z	5.91	0.45	▷ -11.78	0.18	5.69	3.54	BC 8
				Max M_T	5.26	0.88	-11.23	▷ 0.51	4.30	3.80	BC 13
				Min M_T	-1.82	-1.19	1.84	▷ -1.24	4.09	-1.97	BC 22
				Max M_y	5.91	0.45	-11.78	0.18	▷ 5.69	3.54	BC 8
				Min M_y	-4.12	-0.51	3.95	-0.22	▷ -1.19	-1.24	BC 15
				Max M_z	5.26	0.88	-11.23	0.51	4.30	▷ 3.80	BC 13
				Min M_z	-1.82	-1.19	1.84	-1.24	4.09	▷ -1.97	BC 22
			1.290	Max N	▷ 6.12	0.13	-10.93	0.16	-1.57	3.37	BC 8
			Links	Min N	▷ -4.05	-0.61	3.85	-0.22	1.29	-0.88	BC 15
				Max V_y	3.90	▷ 1.12	-6.70	0.33	-0.57	2.24	BC 5
				Min V_y	-3.70	▷ -1.63	3.75	-0.59	1.51	-0.54	BC 14
				Max V_z	-4.05	-0.61	▷ 3.85	-0.22	1.29	-0.88	BC 15
				Min V_z	6.12	0.13	▷ -10.93	0.16	-1.57	3.37	BC 8
				Max M_T	5.48	0.56	-10.37	▷ 0.49	-2.59	3.36	BC 13
				Min M_T	-1.76	-1.27	1.75	▷ -1.24	5.22	-1.17	BC 22
				Max M_y	-1.76	-1.27	1.75	-1.24	▷ 5.22	-1.17	BC 22
				Min M_y	4.17	0.44	-8.44	0.49	▷ -3.36	2.94	BC 7
				Max M_z	5.65	0.04	-10.43	0.30	-2.49	▷ 3.53	BC 12
				Min M_z	-2.11	-0.24	1.86	-0.87	5.00	▷ -1.51	BC 23
		72	1.290	Max N	▷ 6.12	0.13	-10.93	0.16	-1.57	3.37	BC 8
			Rechts	Min N	▷ -4.05	-0.61	3.85	-0.22	1.29	-0.88	BC 15
				Max V_y	3.90	▷ 1.12	-6.70	0.33	-0.57	2.24	BC 5
				Min V_y	-3.70	▷ -1.63	3.75	-0.59	1.51	-0.54	BC 14
				Max V_z	-4.05	-0.61	▷ 3.85	-0.22	1.29	-0.88	BC 15
				Min V_z	6.12	0.13	▷ -10.93	0.16	-1.57	3.37	BC 8
				Max M_T	5.48	0.56	-10.37	▷ 0.49	-2.59	3.36	BC 13
				Min M_T	-1.76	-1.27	1.75	▷ -1.24	5.22	-1.17	BC 22
				Max M_y	-1.76	-1.27	1.75	-1.24	▷ 5.22	-1.17	BC 22
				Min M_y	4.17	0.44	-8.44	0.49	▷ -3.36	2.94	BC 7
				Max M_z	5.65	0.04	-10.43	0.30	-2.49	▷ 3.53	BC 12
				Min M_z	-2.11	-0.24	1.86	-0.87	5.00	▷ -1.51	BC 23
102	RC1	72	0.000	Max N	▷ 6.41	1.30	-4.89	3.13	-1.30	3.72	BC 8
			Links	Min N	▷ -3.71	-0.46	1.08	-1.60	1.16	-1.22	BC 15

4.12 DOORSNEDES - SNEDEKRACHTEN

Resultaatcombinaties

Staaf No.	RC	Knoop No.	Snede x [m]		Krachten [kN] N	V_y	V_z	Momenten [kNm] M_T	M_y	M_z	Bijbehorend Belastingsgeval
102	RC1			Max V_y	5.64	▷ 1.74	-4.35	2.90	-0.97	3.46	BC 11
				Min V_y	-3.33	▷ -1.04	1.07	-1.90	1.37	-1.12	BC 14
				Max V_z	-3.71	-0.46	▷ 1.08	-1.60	1.16	-1.22	BC 15
				Min V_z	6.41	1.30	▷ -4.89	3.13	-1.30	3.72	BC 8
				Max M_T	5.79	1.53	-4.39	▷ 3.40	-2.32	3.75	BC 13
				Min M_T	-1.60	-0.82	-0.91	▷ -2.49	5.05	-1.41	BC 22
				Max M_y	-1.60	-0.82	-0.91	-2.49	▷ 5.05	-1.41	BC 22
				Min M_y	4.34	1.25	-3.40	2.94	▷ -3.12	3.30	BC 7
				Max M_z	5.98	1.24	-4.40	3.25	-2.22	▷ 3.80	BC 12
				Min M_z	-1.98	-0.24	-0.90	-2.20	4.83	▷ -1.52	BC 23
			0.000	Max N	▷ 6.41	1.30	-4.89	3.13	-1.30	3.72	BC 8
			Rechts	Min N	▷ -3.71	-0.46	1.08	-1.60	1.16	-1.22	BC 15
				Max V_y	5.64	▷ 1.74	-4.35	2.90	-0.97	3.46	BC 11
				Min V_y	-3.33	▷ -1.04	1.07	-1.90	1.37	-1.12	BC 14
				Max V_z	-3.71	-0.46	▷ 1.08	-1.60	1.16	-1.22	BC 15
				Min V_z	6.41	1.30	▷ -4.89	3.13	-1.30	3.72	BC 8
				Max M_T	5.79	1.53	-4.39	▷ 3.40	-2.32	3.75	BC 13
				Min M_T	-1.60	-0.82	-0.91	▷ -2.49	5.05	-1.41	BC 22
				Max M_y	-1.60	-0.82	-0.91	-2.49	▷ 5.05	-1.41	BC 22
				Min M_y	4.34	1.25	-3.40	2.94	▷ -3.12	3.30	BC 7
				Max M_z	5.98	1.24	-4.40	3.25	-2.22	▷ 3.80	BC 12
				Min M_z	-1.98	-0.24	-0.90	-2.20	4.83	▷ -1.52	BC 23
			0.583	Max N	▷ 6.58	1.03	-4.17	3.12	-3.99	3.03	BC 8
			Links	Min N	▷ -3.64	-0.54	0.98	-1.60	1.78	-0.93	BC 15
				Max V_y	5.82	▷ 1.47	-3.72	2.90	-3.36	2.51	BC 11
				Min V_y	-3.27	▷ -1.11	0.97	-1.90	1.99	-0.49	BC 14
				Max V_z	-3.64	-0.54	▷ 0.98	-1.60	1.78	-0.93	BC 15
				Min V_z	6.58	1.03	▷ -4.17	3.12	-3.99	3.03	BC 8
				Max M_T	5.97	1.26	-3.68	▷ 3.40	-4.72	2.92	BC 13
				Min M_T	-1.54	-0.89	-1.01	▷ -2.49	4.52	-0.91	BC 22
				Max M_y	-1.54	-0.89	-1.01	-2.49	▷ 4.52	-0.91	BC 22
				Min M_y	4.48	1.03	-2.74	2.93	▷ -4.95	2.63	BC 7
				Max M_z	6.15	0.98	-3.68	3.25	-4.62	▷ 3.14	BC 12
				Min M_z	-1.91	-0.33	-1.00	-2.19	4.31	▷ -1.36	BC 23
			0.583	Max N	▷ 6.58	1.03	-4.17	3.12	-3.99	3.03	BC 8
			Rechts	Min N	▷ -3.64	-0.54	0.98	-1.60	1.78	-0.93	BC 15
				Max V_y	5.82	▷ 1.47	-3.72	2.90	-3.36	2.51	BC 11
				Min V_y	-3.27	▷ -1.11	0.97	-1.90	1.99	-0.49	BC 14
				Max V_z	-3.64	-0.54	▷ 0.98	-1.60	1.78	-0.93	BC 15
				Min V_z	6.58	1.03	▷ -4.17	3.12	-3.99	3.03	BC 8
				Max M_T	5.97	1.26	-3.68	▷ 3.40	-4.72	2.92	BC 13
				Min M_T	-1.54	-0.89	-1.01	▷ -2.49	4.52	-0.91	BC 22
				Max M_y	-1.54	-0.89	-1.01	-2.49	▷ 4.52	-0.91	BC 22
				Min M_y	4.48	1.03	-2.74	2.93	▷ -4.95	2.63	BC 7
				Max M_z	6.15	0.98	-3.68	3.25	-4.62	▷ 3.14	BC 12
				Min M_z	-1.91	-0.33	-1.00	-2.19	4.31	▷ -1.36	BC 23
			0.645	Max N	▷ 6.62	0.98	-4.04	3.12	-4.25	2.96	BC 8
			Links	Min N	▷ -3.63	-0.56	0.94	-1.60	1.84	-0.90	BC 15
				Max V_y	5.85	▷ 1.42	-3.60	2.90	-3.59	2.42	BC 11
				Min V_y	-3.27	▷ -1.12	0.93	-1.90	2.04	-0.42	BC 14
				Max V_z	-3.63	-0.56	▷ 0.94	-1.60	1.84	-0.90	BC 15
				Min V_z	6.62	0.98	▷ -4.04	3.12	-4.25	2.96	BC 8
				Max M_T	6.00	1.21	-3.54	▷ 3.40	-4.95	2.84	BC 13
				Min M_T	-1.53	-0.90	-1.05	▷ -2.49	4.45	-0.86	BC 22
				Max M_y	-1.53	-0.90	-1.05	-2.49	▷ 4.45	-0.86	BC 22
				Min M_y	4.51	1.00	-2.62	2.93	▷ -5.12	2.57	BC 7
				Max M_z	6.18	0.93	-3.54	3.25	-4.85	▷ 3.08	BC 12
				Min M_z	-1.91	-0.34	-1.04	-2.19	4.24	▷ -1.34	BC 23
			0.645	Max N	▷ 6.62	0.98	-4.04	3.12	-4.25	2.96	BC 8
			Rechts	Min N	▷ -3.63	-0.56	0.94	-1.60	1.84	-0.90	BC 15
				Max V_y	5.85	▷ 1.42	-3.60	2.90	-3.59	2.42	BC 11
				Min V_y	-3.27	▷ -1.12	0.93	-1.90	2.04	-0.42	BC 14
				Max V_z	-3.63	-0.56	▷ 0.94	-1.60	1.84	-0.90	BC 15
				Min V_z	6.62	0.98	▷ -4.04	3.12	-4.25	2.96	BC 8
				Max M_T	6.00	1.21	-3.54	▷ 3.40	-4.95	2.84	BC 13
				Min M_T	-1.53	-0.90	-1.05	▷ -2.49	4.45	-0.86	BC 22
				Max M_y	-1.53	-0.90	-1.05	-2.49	▷ 4.45	-0.86	BC 22
				Min M_y	4.51	1.00	-2.62	2.93	▷ -5.12	2.57	BC 7
				Max M_z	6.18	0.93	-3.54	3.25	-4.85	▷ 3.08	BC 12
				Min M_z	-1.91	-0.34	-1.04	-2.19	4.24	▷ -1.34	BC 23
			1.290	Max N	▷ 6.81	0.68	-3.22	3.11	-6.53	2.45	BC 8
			Links	Min N	▷ -3.56	-0.65	0.85	-1.60	2.39	-0.51	BC 15
				Max V_y	4.38	▷ 1.17	-2.15	1.92	-3.95	0.92	BC 5
				Min V_y	-3.20	▷ -1.20	0.85	-1.90	2.59	0.33	BC 14
				Max V_z	-3.20	-1.20	▷ 0.85	-1.90	2.59	0.33	BC 14
				Min V_z	6.64	0.96	▷ -3.23	3.27	-6.63	2.03	BC 9
				Max M_T	6.20	0.90	-2.73	▷ 3.39	-6.91	2.19	BC 13
				Min M_T	-1.47	-0.98	-1.13	▷ -2.48	3.72	-0.25	BC 22
				Max M_y	-1.47	-0.98	-1.13	-2.48	▷ 3.72	-0.25	BC 22
				Min M_y	6.20	0.90	-2.73	3.39	▷ -6.91	2.19	BC 13
				Max M_z	5.02	0.20	-1.88	2.63	-6.32	▷ 2.86	BC 6
				Min M_z	-1.92	0.68	0.78	-1.37	2.82	▷ -1.24	BC 21
		73	1.290	Max N	▷ 6.81	0.68	-3.22	3.11	-6.53	2.45	BC 8
			Rechts	Min N	▷ -3.56	-0.65	0.85	-1.60	2.39	-0.51	BC 15

4.12 DOORSNEDES - SNEDEKRACHTEN

Resultaatcombinaties

Staaf No.	RC	Knoop No.	Snede x [m]		Krachten [kN] N	V_y	V_z	Momenten [kNm] M_T	M_y	M_z	Bijbehorend Belastingsgeval
102	RC1			Max V_y	4.38	⊳ 1.17	-2.15	1.92	-3.95	0.92	BC 5
				Min V_y	-3.20	⊳ -1.20	0.85	-1.90	2.59	0.33	BC 14
				Max V_z	-3.20	-1.20	⊳ 0.85	-1.90	2.59	0.33	BC 14
				Min V_z	6.64	0.96	⊳ -3.23	3.27	-6.63	2.03	BC 9
				Max M_T	6.20	0.90	-2.73	⊳ 3.39	-6.91	2.19	BC 13
				Min M_T	-1.47	-0.98	-1.13	⊳ -2.48	3.72	-0.25	BC 22
				Max M_y	-1.47	-0.98	-1.13	-2.48	⊳ 3.72	-0.25	BC 22
				Min M_y	6.20	0.90	-2.73	3.39	⊳ -6.91	2.19	BC 13
				Max M_z	5.02	0.20	-1.88	2.63	-6.32	⊳ 2.86	BC 6
				Min M_z	-1.92	0.68	0.78	-1.37	2.82	⊳ -1.24	BC 21
103	RC1	73	0.000	Max N	⊳ 5.78	14.00	2.68	6.52	-6.32	3.07	BC 8
			Links	Min N	⊳ -2.87	-3.69	-2.00	-3.24	2.26	-0.93	BC 15
				Max V_y	5.58	⊳ 14.36	2.62	6.64	-6.42	2.73	BC 9
				Min V_y	-2.44	⊳ -4.39	-1.89	-3.45	2.46	-0.28	BC 14
				Max V_z	4.14	10.88	⊳ 3.23	5.58	-6.15	3.28	BC 6
				Min V_z	-1.50	-1.72	⊳ -3.98	-3.80	3.39	-1.22	BC 23
				Max M_T	5.22	13.86	3.11	⊳ 6.75	-6.71	2.83	BC 13
				Min M_T	-1.07	-2.41	-3.88	⊳ -4.01	3.59	-0.56	BC 22
				Max M_y	-1.07	-2.41	-3.88	-4.01	⊳ 3.59	-0.56	BC 22
				Min M_y	5.22	13.86	3.11	6.75	⊳ -6.71	2.83	BC 13
				Max M_z	4.14	10.88	3.23	5.58	-6.15	⊳ 3.28	BC 6
				Min M_z	-1.63	-0.95	-2.09	-3.09	2.68	⊳ -1.23	BC 21
			0.000	Max N	⊳ 5.78	14.00	2.68	6.52	-6.32	3.07	BC 8
			Rechts	Min N	⊳ -2.87	-3.69	-2.00	-3.24	2.26	-0.93	BC 15
				Max V_y	5.58	⊳ 14.36	2.62	6.64	-6.42	2.73	BC 9
				Min V_y	-2.44	⊳ -4.39	-1.89	-3.45	2.46	-0.28	BC 14
				Max V_z	4.14	10.88	⊳ 3.23	5.58	-6.15	3.28	BC 6
				Min V_z	-1.50	-1.72	⊳ -3.98	-3.80	3.39	-1.22	BC 23
				Max M_T	5.22	13.86	3.11	⊳ 6.75	-6.71	2.83	BC 13
				Min M_T	-1.07	-2.41	-3.88	⊳ -4.01	3.59	-0.56	BC 22
				Max M_y	-1.07	-2.41	-3.88	-4.01	⊳ 3.59	-0.56	BC 22
				Min M_y	5.22	13.86	3.11	6.75	⊳ -6.71	2.83	BC 13
				Max M_z	4.14	10.88	3.23	5.58	-6.15	⊳ 3.28	BC 6
				Min M_z	-1.63	-0.95	-2.09	-3.09	2.68	⊳ -1.23	BC 21
			0.583	Max N	⊳ 5.94	13.76	3.35	6.56	-4.62	-5.03	BC 8
			Links	Min N	⊳ -2.80	-3.77	-2.11	-3.23	1.09	1.24	BC 15
				Max V_y	5.75	⊳ 14.12	3.29	6.67	-4.75	-5.58	BC 9
				Min V_y	-2.39	⊳ -4.46	-2.00	-3.44	1.35	2.30	BC 14
				Max V_z	4.27	10.70	⊳ 3.87	5.63	-4.12	-3.02	BC 6
				Min V_z	-1.43	-1.80	⊳ -4.08	-3.79	1.07	-0.20	BC 23
				Max M_T	5.39	13.62	3.78	⊳ 6.80	-4.75	-5.19	BC 13
				Min M_T	-1.02	-2.48	-3.98	⊳ -3.99	1.33	0.86	BC 22
				Max M_y	-1.16	-1.73	-2.09	-3.30	⊳ 1.72	0.41	BC 20
				Min M_y	5.75	14.12	3.29	6.67	⊳ -4.75	-5.58	BC 9
				Max M_z	-2.39	-4.46	-2.00	-3.44	1.35	⊳ 2.30	BC 14
				Min M_z	5.75	14.12	3.29	6.67	-4.75	⊳ -5.58	BC 9
			0.583	Max N	⊳ 5.94	13.76	3.35	6.56	-4.62	-5.03	BC 8
			Rechts	Min N	⊳ -2.80	-3.77	-2.11	-3.23	1.09	1.24	BC 15
				Max V_y	5.75	⊳ 14.12	3.29	6.67	-4.75	-5.58	BC 9
				Min V_y	-2.39	⊳ -4.46	-2.00	-3.44	1.35	2.30	BC 14
				Max V_z	4.27	10.70	⊳ 3.87	5.63	-4.12	-3.02	BC 6
				Min V_z	-1.43	-1.80	⊳ -4.08	-3.79	1.07	-0.20	BC 23
				Max M_T	5.39	13.62	3.78	⊳ 6.80	-4.75	-5.19	BC 13
				Min M_T	-1.02	-2.48	-3.98	⊳ -3.99	1.33	0.86	BC 22
				Max M_y	-1.16	-1.73	-2.09	-3.30	⊳ 1.72	0.41	BC 20
				Min M_y	5.75	14.12	3.29	6.67	⊳ -4.75	-5.58	BC 9
				Max M_z	-2.39	-4.46	-2.00	-3.44	1.35	⊳ 2.30	BC 14
				Min M_z	5.75	14.12	3.29	6.67	-4.75	⊳ -5.58	BC 9
			0.645	Max N	⊳ 5.97	13.72	3.47	6.57	-4.41	-5.89	BC 8
			Links	Min N	⊳ -2.79	-3.78	-2.15	-3.23	0.96	1.48	BC 15
				Max V_y	5.78	⊳ 14.07	3.42	6.67	-4.55	-6.45	BC 9
				Min V_y	-2.38	⊳ -4.47	-2.03	-3.44	1.23	2.58	BC 14
				Max V_z	4.29	10.66	⊳ 3.98	5.64	-3.88	-3.68	BC 6
				Min V_z	-1.42	-1.81	⊳ -4.12	-3.78	0.81	-0.08	BC 23
				Max M_T	5.42	13.57	3.91	⊳ 6.81	-4.51	-6.04	BC 13
				Min M_T	-1.01	-2.49	-4.01	⊳ -3.99	1.08	1.02	BC 22
				Max M_y	-1.15	-1.74	-2.12	-3.30	⊳ 1.59	0.52	BC 20
				Min M_y	5.78	14.07	3.42	6.67	⊳ -4.55	-6.45	BC 9
				Max M_z	-2.38	-4.47	-2.03	-3.44	1.23	⊳ 2.58	BC 14
				Min M_z	5.78	14.07	3.42	6.67	-4.55	⊳ -6.45	BC 9
			0.645	Max N	⊳ 5.97	13.72	3.47	6.57	-4.41	-5.89	BC 8
			Rechts	Min N	⊳ -2.79	-3.78	-2.15	-3.23	0.96	1.48	BC 15
				Max V_y	5.78	⊳ 14.07	3.42	6.67	-4.55	-6.45	BC 9
				Min V_y	-2.38	⊳ -4.47	-2.03	-3.44	1.23	2.58	BC 14
				Max V_z	4.29	10.66	⊳ 3.98	5.64	-3.88	-3.68	BC 6
				Min V_z	-1.42	-1.81	⊳ -4.12	-3.78	0.81	-0.08	BC 23
				Max M_T	5.42	13.57	3.91	⊳ 6.81	-4.51	-6.04	BC 13
				Min M_T	-1.01	-2.49	-4.01	⊳ -3.99	1.08	1.02	BC 22
				Max M_y	-1.15	-1.74	-2.12	-3.30	⊳ 1.59	0.52	BC 20
				Min M_y	5.78	14.07	3.42	6.67	⊳ -4.55	-6.45	BC 9
				Max M_z	-2.38	-4.47	-2.03	-3.44	1.23	⊳ 2.58	BC 14
				Min M_z	5.78	14.07	3.42	6.67	-4.55	⊳ -6.45	BC 9
			1.290	Max N	⊳ 6.13	13.45	4.23	6.61	-1.86	-14.62	BC 8
			Links	Min N	⊳ -2.71	-3.87	-2.24	-3.22	-0.49	3.95	BC 15

4.12 DOORSNEDES - SNEDEKRACHTEN

Resultaatcombinaties

Staaf No.	RC	Knoop No.	Snede x [m]		Krachten [kN] N	V_y	V_z	Momenten [kNm] M_T	M_y	M_z	Bijbehorend Belastingsgeval
103	RC1			Max V_y	5.95	▷ 13.80	4.17	6.71	-2.03	-15.41	BC 9
				Min V_y	-2.32	▷ -4.55	-2.12	-3.44	-0.14	5.49	BC 14
				Max V_z	5.77	12.96	▷ 4.72	6.76	-1.51	-13.89	BC 12
				Min V_z	-1.35	-1.90	▷ -4.22	-3.76	-1.91	1.11	BC 23
				Max M_T	5.59	13.30	4.66	▷ 6.86	-1.68	-14.68	BC 13
				Min M_T	-0.95	-2.57	-4.10	▷ -3.97	-1.57	2.65	BC 22
				Max M_y	-1.09	-1.82	-2.21	-3.30	▷ 0.16	1.67	BC 20
				Min M_y	4.79	12.14	3.58	5.61	▷ -2.07	-13.50	BC 3
				Max M_z	-2.32	-4.55	-2.12	-3.44	-0.14	▷ 5.49	BC 14
				Min M_z	5.95	13.80	4.17	6.71	-2.03	▷ -15.41	BC 9
		47	1.290	Max N	▷ 6.13	13.45	4.23	6.61	-1.86	-14.62	BC 8
			Rechts	Min N	▷ -2.71	-3.87	-2.24	-3.22	-0.49	3.95	BC 15
				Max V_y	5.95	▷ 13.80	4.17	6.71	-2.03	-15.41	BC 9
				Min V_y	-2.32	▷ -4.55	-2.12	-3.44	-0.14	5.49	BC 14
				Max V_z	5.77	12.96	▷ 4.72	6.76	-1.51	-13.89	BC 12
				Min V_z	-1.35	-1.90	▷ -4.22	-3.76	-1.91	1.11	BC 23
				Max M_T	5.59	13.30	4.66	▷ 6.86	-1.68	-14.68	BC 13
				Min M_T	-0.95	-2.57	-4.10	▷ -3.97	-1.57	2.65	BC 22
				Max M_y	-1.09	-1.82	-2.21	-3.30	▷ 0.16	1.67	BC 20
				Min M_y	4.79	12.14	3.58	5.61	▷ -2.07	-13.50	BC 3
				Max M_z	-2.32	-4.55	-2.12	-3.44	-0.14	▷ 5.49	BC 14
				Min M_z	5.95	13.80	4.17	6.71	-2.03	▷ -15.41	BC 9
	Snede No. 17: RRO 100x60x4 (koudgevormd)										
18	RC1	191	0.000	Max N	▷ 3.89	-0.30	-1.78	-0.03	-0.00	-0.46	BC 15
			Links	Min N	▷ -17.36	1.74	4.14	0.13	-0.01	1.98	BC 8
				Max V_y	-17.36	▷ 1.74	4.14	0.13	-0.01	1.98	BC 8
				Min V_y	3.89	▷ -0.30	-1.78	-0.03	-0.00	-0.46	BC 15
				Max V_z	-16.44	1.61	▷ 4.16	0.14	-0.01	1.82	BC 9
				Min V_z	2.06	-0.03	▷ -1.83	-0.04	-0.00	-0.14	BC 14
				Max M_T	-16.44	1.61	4.16	▷ 0.14	-0.01	1.82	BC 9
				Min M_T	2.06	-0.03	-1.83	▷ -0.04	-0.00	-0.14	BC 14
				Max M_y	-0.14	-0.11	0.41	0.02	▷ 0.00	-0.18	BC 23
				Min M_y	-16.44	1.61	4.16	0.14	▷ -0.01	1.82	BC 9
				Max M_z	-17.36	1.74	4.14	0.13	-0.01	▷ 1.98	BC 8
				Min M_z	3.89	-0.30	-1.78	-0.03	-0.00	▷ -0.46	BC 15
			0.000	Max N	▷ 3.89	-0.30	-1.78	-0.03	-0.00	-0.46	BC 15
			Rechts	Min N	▷ -17.36	1.74	4.14	0.13	-0.01	1.98	BC 8
				Max V_y	-17.36	▷ 1.74	4.14	0.13	-0.01	1.98	BC 8
				Min V_y	3.89	▷ -0.30	-1.78	-0.03	-0.00	-0.46	BC 15
				Max V_z	-16.44	1.61	▷ 4.16	0.14	-0.01	1.82	BC 9
				Min V_z	2.06	-0.03	▷ -1.83	-0.04	-0.00	-0.14	BC 14
				Max M_T	-16.44	1.61	4.16	▷ 0.14	-0.01	1.82	BC 9
				Min M_T	2.06	-0.03	-1.83	▷ -0.04	-0.00	-0.14	BC 14
				Max M_y	-0.14	-0.11	0.41	0.02	▷ 0.00	-0.18	BC 23
				Min M_y	-16.44	1.61	4.16	0.14	▷ -0.01	1.82	BC 9
				Max M_z	-17.36	1.74	4.14	0.13	-0.01	▷ 1.98	BC 8
				Min M_z	3.89	-0.30	-1.78	-0.03	-0.00	▷ -0.46	BC 15
			0.583	Max N	▷ 3.94	-0.29	-1.34	-0.03	-0.95	-0.29	BC 15
			Links	Min N	▷ -16.95	1.62	3.01	0.13	2.16	0.97	BC 8
				Max V_y	-16.95	▷ 1.62	3.01	0.13	2.16	0.97	BC 8
				Min V_y	3.94	▷ -0.29	-1.34	-0.03	-0.95	-0.29	BC 15
				Max V_z	-16.04	1.50	▷ 3.03	0.13	2.16	0.88	BC 9
				Min V_z	2.13	-0.05	▷ -1.37	-0.04	-0.98	-0.12	BC 14
				Max M_T	-16.04	1.50	3.03	▷ 0.13	2.16	0.88	BC 9
				Min M_T	2.13	-0.05	-1.37	▷ -0.04	-0.98	-0.12	BC 14
				Max M_y	-16.04	1.50	3.03	0.13	▷ 2.16	0.88	BC 9
				Min M_y	2.13	-0.05	-1.37	-0.04	▷ -0.98	-0.12	BC 14
				Max M_z	-16.95	1.62	3.01	0.13	2.16	▷ 0.97	BC 8
				Min M_z	3.94	-0.29	-1.34	-0.03	-0.95	▷ -0.29	BC 15
			0.583	Max N	▷ 3.94	-0.29	-1.34	-0.03	-0.95	-0.29	BC 15
			Rechts	Min N	▷ -16.95	1.62	3.01	0.13	2.16	0.97	BC 8
				Max V_y	-16.95	▷ 1.62	3.01	0.13	2.16	0.97	BC 8
				Min V_y	3.94	▷ -0.29	-1.34	-0.03	-0.95	-0.29	BC 15
				Max V_z	-16.04	1.50	▷ 3.03	0.13	2.16	0.88	BC 9
				Min V_z	2.13	-0.05	▷ -1.37	-0.04	-0.98	-0.12	BC 14
				Max M_T	-16.04	1.50	3.03	▷ 0.13	2.16	0.88	BC 9
				Min M_T	2.13	-0.05	-1.37	▷ -0.04	-0.98	-0.12	BC 14
				Max M_y	-16.04	1.50	3.03	0.13	▷ 2.16	0.88	BC 9
				Min M_y	2.13	-0.05	-1.37	-0.04	▷ -0.98	-0.12	BC 14
				Max M_z	-16.95	1.62	3.01	0.13	2.16	▷ 0.97	BC 8
				Min M_z	3.94	-0.29	-1.34	-0.03	-0.95	▷ -0.29	BC 15
			0.679	Max N	▷ 3.95	-0.29	-1.18	-0.03	-1.08	-0.26	BC 15
			Links	Min N	▷ -16.82	1.57	2.65	0.13	2.43	0.81	BC 8
				Max V_y	-16.82	▷ 1.57	2.65	0.13	2.43	0.81	BC 8
				Min V_y	3.95	▷ -0.29	-1.18	-0.03	-1.08	-0.26	BC 15
				Max V_z	-15.91	1.45	▷ 2.66	0.13	2.44	0.73	BC 9
				Min V_z	2.15	-0.06	▷ -1.21	-0.04	-1.11	-0.11	BC 14
				Max M_T	-15.91	1.45	2.66	▷ 0.13	2.44	0.73	BC 9
				Min M_T	2.15	-0.06	-1.21	▷ -0.04	-1.11	-0.11	BC 14
				Max M_y	-15.91	1.45	2.66	0.13	▷ 2.44	0.73	BC 9
				Min M_y	2.15	-0.06	-1.21	-0.04	▷ -1.11	-0.11	BC 14
				Max M_z	-16.82	1.57	2.65	0.13	2.43	▷ 0.81	BC 8
				Min M_z	3.95	-0.29	-1.18	-0.03	-1.08	▷ -0.26	BC 15
			0.679	Max N	▷ 3.95	-0.29	-1.18	-0.03	-1.08	-0.26	BC 15
			Rechts	Min N	▷ -16.82	1.57	2.65	0.13	2.43	0.81	BC 8

4.12 DOORSNEDES - SNEDEKRACHTEN

Resultaatcombinaties

Staaf No.	RC	Knoop No.	Snede x [m]		Krachten [kN] N	V_y	V_z	Momenten [kNm] M_T	M_y	M_z	Bijbehorend Belastingsgeval
18	RC1			Max V_y	-16.82	▷ 1.57	2.65	0.13	2.43	0.81	BC 8
				Min V_y	3.95	▷ -0.29	-1.18	-0.03	-1.08	-0.26	BC 15
				Max V_z	-15.91	1.45	▷ 2.66	0.13	2.44	0.73	BC 9
				Min V_z	2.15	-0.06	▷ -1.21	-0.04	-1.11	-0.11	BC 14
				Max M_T	-15.91	1.45	2.66	▷ 0.13	2.44	0.73	BC 9
				Min M_T	2.15	-0.06	-1.21	▷ -0.04	-1.11	-0.11	BC 14
				Max M_y	-15.91	1.45	2.66	0.13	▷ 2.44	0.73	BC 9
				Min M_y	2.15	-0.06	-1.21	-0.04	▷ -1.11	-0.11	BC 14
				Max M_z	-16.82	1.57	2.65	0.13	2.43	▷ 0.81	BC 8
				Min M_z	3.95	-0.29	-1.18	-0.03	-1.08	▷ -0.26	BC 15
			0.707	Max N	▷ 3.95	-0.29	-1.13	-0.03	-1.11	-0.25	BC 15
			Links	Min N	▷ -16.78	1.55	2.54	0.13	2.50	0.77	BC 8
				Max V_y	-16.78	▷ 1.55	2.54	0.13	2.50	0.77	BC 8
				Min V_y	3.95	▷ -0.29	-1.13	-0.03	-1.11	-0.25	BC 15
				Max V_z	-15.87	1.43	▷ 2.55	0.13	2.51	0.69	BC 9
				Min V_z	2.15	-0.06	▷ -1.16	-0.04	-1.14	-0.11	BC 14
				Max M_T	-15.87	1.43	2.55	▷ 0.13	2.51	0.69	BC 9
				Min M_T	2.15	-0.06	-1.16	▷ -0.04	-1.14	-0.11	BC 14
				Max M_y	-15.87	1.43	2.55	0.13	▷ 2.51	0.69	BC 9
				Min M_y	2.15	-0.06	-1.16	-0.04	▷ -1.14	-0.11	BC 14
				Max M_z	-16.78	1.55	2.54	0.13	2.50	▷ 0.77	BC 8
				Min M_z	3.95	-0.29	-1.13	-0.03	-1.11	▷ -0.25	BC 15
			0.707	Max N	▷ 3.95	-0.29	-1.13	-0.03	-1.11	-0.25	BC 15
			Rechts	Min N	▷ -16.78	1.55	2.54	0.13	2.50	0.77	BC 8
				Max V_y	-16.78	▷ 1.55	2.54	0.13	2.50	0.77	BC 8
				Min V_y	3.95	▷ -0.29	-1.13	-0.03	-1.11	-0.25	BC 15
				Max V_z	-15.87	1.43	▷ 2.55	0.13	2.51	0.69	BC 9
				Min V_z	2.15	-0.06	▷ -1.16	-0.04	-1.14	-0.11	BC 14
				Max M_T	-15.87	1.43	2.55	▷ 0.13	2.51	0.69	BC 9
				Min M_T	2.15	-0.06	-1.16	▷ -0.04	-1.14	-0.11	BC 14
				Max M_y	-15.87	1.43	2.55	0.13	▷ 2.51	0.69	BC 9
				Min M_y	2.15	-0.06	-1.16	-0.04	▷ -1.14	-0.11	BC 14
				Max M_z	-16.78	1.55	2.54	0.13	2.50	▷ 0.77	BC 8
				Min M_z	3.95	-0.29	-1.13	-0.03	-1.11	▷ -0.25	BC 15
			2.552	Max N	▷ 4.23	-0.28	2.11	-0.03	-0.20	0.27	BC 15
			Links	Min N	▷ -14.13	0.14	-4.57	0.12	0.50	-0.83	BC 8
				Max V_y	-12.52	▷ 0.31	-3.87	0.09	0.43	-0.76	BC 2
				Min V_y	4.23	▷ -0.28	2.11	-0.03	-0.20	0.27	BC 15
				Max V_z	2.58	-0.19	▷ 2.20	-0.04	-0.18	0.12	BC 14
				Min V_z	-12.95	0.04	▷ -4.61	0.12	0.48	-0.69	BC 11
				Max M_T	-13.31	0.11	-4.60	▷ 0.13	0.49	-0.76	BC 9
				Min M_T	2.58	-0.19	2.20	▷ -0.04	-0.18	0.12	BC 14
				Max M_y	-14.13	0.14	-4.57	0.12	▷ 0.50	-0.83	BC 8
				Min M_y	4.23	-0.28	2.11	-0.03	▷ -0.20	0.27	BC 15
				Max M_z	4.23	-0.28	2.11	-0.03	-0.20	▷ 0.27	BC 15
				Min M_z	-14.13	0.14	-4.57	0.12	0.50	▷ -0.83	BC 8
			2.552	Max N	▷ 4.23	-0.28	2.11	-0.03	-0.20	0.27	BC 15
			Rechts	Min N	▷ -14.13	0.14	-4.57	0.12	0.50	-0.83	BC 8
				Max V_y	-12.52	▷ 0.31	-3.87	0.09	0.43	-0.76	BC 2
				Min V_y	4.23	▷ -0.28	2.11	-0.03	-0.20	0.27	BC 15
				Max V_z	2.58	-0.19	▷ 2.20	-0.04	-0.18	0.12	BC 14
				Min V_z	-12.95	0.04	▷ -4.61	0.12	0.48	-0.69	BC 11
				Max M_T	-13.31	0.11	-4.60	▷ 0.13	0.49	-0.76	BC 9
				Min M_T	2.58	-0.19	2.20	▷ -0.04	-0.18	0.12	BC 14
				Max M_y	-14.13	0.14	-4.57	0.12	▷ 0.50	-0.83	BC 8
				Min M_y	4.23	-0.28	2.11	-0.03	▷ -0.20	0.27	BC 15
				Max M_z	4.23	-0.28	2.11	-0.03	-0.20	▷ 0.27	BC 15
				Min M_z	-14.13	0.14	-4.57	0.12	0.50	▷ -0.83	BC 8
			2.581	Max N	▷ 4.24	-0.28	2.16	-0.03	-0.14	0.27	BC 15
			Links	Min N	▷ -14.09	0.12	-4.68	0.12	0.37	-0.83	BC 8
				Max V_y	-12.49	▷ 0.30	-3.96	0.09	0.32	-0.77	BC 2
				Min V_y	4.24	▷ -0.28	2.16	-0.03	-0.14	0.27	BC 15
				Max V_z	2.59	-0.19	▷ 2.25	-0.04	-0.12	0.12	BC 14
				Min V_z	-12.91	0.02	▷ -4.71	0.12	0.34	-0.69	BC 11
				Max M_T	-13.27	0.09	-4.71	▷ 0.13	0.36	-0.76	BC 9
				Min M_T	2.59	-0.19	2.25	▷ -0.04	-0.12	0.12	BC 14
				Max M_y	-14.09	0.12	-4.68	0.12	▷ 0.37	-0.83	BC 8
				Min M_y	4.24	-0.28	2.16	-0.03	▷ -0.14	0.27	BC 15
				Max M_z	4.24	-0.28	2.16	-0.03	-0.14	▷ 0.27	BC 15
				Min M_z	-14.09	0.12	-4.68	0.12	0.37	▷ -0.83	BC 8
			2.581	Max N	▷ 4.24	-0.28	2.16	-0.03	-0.14	0.27	BC 15
			Rechts	Min N	▷ -14.09	0.12	-4.68	0.12	0.37	-0.83	BC 8
				Max V_y	-12.49	▷ 0.30	-3.96	0.09	0.32	-0.77	BC 2
				Min V_y	4.24	▷ -0.28	2.16	-0.03	-0.14	0.27	BC 15
				Max V_z	2.59	-0.19	▷ 2.25	-0.04	-0.12	0.12	BC 14
				Min V_z	-12.91	0.02	▷ -4.71	0.12	0.34	-0.69	BC 11
				Max M_T	-13.27	0.09	-4.71	▷ 0.13	0.36	-0.76	BC 9
				Min M_T	2.59	-0.19	2.25	▷ -0.04	-0.12	0.12	BC 14
				Max M_y	-14.09	0.12	-4.68	0.12	▷ 0.37	-0.83	BC 8
				Min M_y	4.24	-0.28	2.16	-0.03	▷ -0.14	0.27	BC 15
				Max M_z	4.24	-0.28	2.16	-0.03	-0.14	▷ 0.27	BC 15
				Min M_z	-14.09	0.12	-4.68	0.12	0.37	▷ -0.83	BC 8
			2.677	Max N	▷ 4.25	-0.28	2.32	-0.03	0.08	0.30	BC 15
			Links	Min N	▷ -13.97	0.05	-5.00	0.12	-0.10	-0.84	BC 8

4.12 DOORSNEDES - SNEDEKRACHTEN

Resultaatcombinaties

Staaf No.	RC	Knoop No.	Snede x [m]		Krachten [kN] N	V_y	V_z	Momenten [kNm] M_T	M_y	M_z	Bijbehorend Belastingsgeval
18	RC1			Max V_y	-12.40	▷ 0.25	-4.23	0.09	-0.08	-0.79	BC 2
				Min V_y	4.25	▷ -0.28	2.32	-0.03	0.08	0.30	BC 15
				Max V_z	2.61	-0.20	▷ 2.41	-0.04	0.10	0.14	BC 14
				Min V_z	-12.79	-0.04	▷ -5.04	0.12	-0.13	-0.69	BC 11
				Max M_T	-13.15	0.02	-5.03	▷ 0.13	-0.11	-0.76	BC 9
				Min M_T	2.61	-0.20	2.41	▷ -0.04	0.10	0.14	BC 14
				Max M_y	2.61	-0.20	2.41	-0.04	▷ 0.10	0.14	BC 14
				Min M_y	-10.05	0.06	-4.31	0.10	▷ -0.13	-0.49	BC 5
				Max M_z	4.25	-0.28	2.32	-0.03	0.08	▷ 0.30	BC 15
				Min M_z	-13.97	0.05	-5.00	0.12	-0.10	▷ -0.84	BC 8
			2.677	Max N	▷ 4.25	-0.28	2.32	-0.03	0.08	0.30	BC 15
			Rechts	Min N	▷ -13.97	0.05	-5.00	0.12	-0.10	-0.84	BC 8
				Max V_y	-12.40	▷ 0.25	-4.23	0.09	-0.08	-0.79	BC 2
				Min V_y	4.25	▷ -0.28	2.32	-0.03	0.08	0.30	BC 15
				Max V_z	2.61	-0.20	▷ 2.41	-0.04	0.10	0.14	BC 14
				Min V_z	-12.79	-0.04	▷ -5.04	0.12	-0.13	-0.69	BC 11
				Max M_T	-13.15	0.02	-5.03	▷ 0.13	-0.11	-0.76	BC 9
				Min M_T	2.61	-0.20	2.41	▷ -0.04	0.10	0.14	BC 14
				Max M_y	2.61	-0.20	2.41	-0.04	▷ 0.10	0.14	BC 14
				Min M_y	-10.05	0.06	-4.31	0.10	▷ -0.13	-0.49	BC 5
				Max M_z	4.25	-0.28	2.32	-0.03	0.08	▷ 0.30	BC 15
				Min M_z	-13.97	0.05	-5.00	0.12	-0.10	▷ -0.84	BC 8
			3.260	Max N	▷ 4.30	-0.29	2.78	-0.03	1.61	0.47	BC 15
			Links	Min N	▷ -13.64	-0.16	-5.84	0.12	-3.35	-0.78	BC 8
				Max V_y	-5.20	▷ 0.20	-0.81	0.01	-0.43	-0.52	BC 18
				Min V_y	4.30	▷ -0.29	2.78	-0.03	1.61	0.47	BC 15
				Max V_z	2.68	-0.23	▷ 2.88	-0.04	1.69	0.27	BC 14
				Min V_z	-12.48	-0.23	▷ -5.88	0.12	-3.40	-0.59	BC 11
				Max M_T	-12.84	-0.17	-5.88	▷ 0.13	-3.38	-0.69	BC 9
				Min M_T	2.68	-0.23	2.88	▷ -0.04	1.69	0.27	BC 14
				Max M_y	2.68	-0.23	2.88	-0.04	▷ 1.69	0.27	BC 14
				Min M_y	-12.48	-0.23	-5.88	0.12	▷ -3.40	-0.59	BC 11
				Max M_z	4.30	-0.29	2.78	-0.03	1.61	▷ 0.47	BC 15
				Min M_z	-12.17	0.10	-4.99	0.09	-2.84	▷ -0.88	BC 2
		24	3.260	Max N	▷ 4.30	-0.29	2.78	-0.03	1.61	0.47	BC 15
			Rechts	Min N	▷ -13.64	-0.16	-5.84	0.12	-3.35	-0.78	BC 8
				Max V_y	-5.20	▷ 0.20	-0.81	0.01	-0.43	-0.52	BC 18
				Min V_y	4.30	▷ -0.29	2.78	-0.03	1.61	0.47	BC 15
				Max V_z	2.68	-0.23	▷ 2.88	-0.04	1.69	0.27	BC 14
				Min V_z	-12.48	-0.23	▷ -5.88	0.12	-3.40	-0.59	BC 11
				Max M_T	-12.84	-0.17	-5.88	▷ 0.13	-3.38	-0.69	BC 9
				Min M_T	2.68	-0.23	2.88	▷ -0.04	1.69	0.27	BC 14
				Max M_y	2.68	-0.23	2.88	-0.04	▷ 1.69	0.27	BC 14
				Min M_y	-12.48	-0.23	-5.88	0.12	▷ -3.40	-0.59	BC 11
				Max M_z	4.30	-0.29	2.78	-0.03	1.61	▷ 0.47	BC 15
				Min M_z	-12.17	0.10	-4.99	0.09	-2.84	▷ -0.88	BC 2
19	RC1	189	0.000	Max N	▷ 0.00	0.00	0.00	0.00	0.00	0.00	
			Links	Min N	▷ -5.26	1.71	4.48	0.03	-0.01	1.74	BC 10
				Max V_y	-5.19	▷ 1.77	4.49	0.03	-0.01	1.84	BC 8
				Min V_y	-0.61	▷ -0.25	-1.87	0.00	-0.00	-0.41	BC 15
				Max V_z	-4.83	1.62	▷ 4.51	0.04	-0.01	1.66	BC 9
				Min V_z	-1.34	0.04	▷ -1.92	-0.01	-0.00	-0.04	BC 14
				Max M_T	-4.78	1.62	3.92	▷ 0.04	-0.01	1.63	BC 13
				Min M_T	-1.60	0.12	0.39	▷ -0.04	-0.00	0.10	BC 22
				Max M_y	-0.86	-0.17	0.44	-0.03	▷ 0.00	-0.27	BC 23
				Min M_y	-4.83	1.62	4.51	0.04	▷ -0.01	1.66	BC 9
				Max M_z	-5.19	1.77	4.49	0.03	-0.01	▷ 1.84	BC 8
				Min M_z	-0.61	-0.25	-1.87	0.00	-0.00	▷ -0.41	BC 15
			0.000	Max N	▷ 0.00	0.00	0.00	0.00	0.00	0.00	
			Rechts	Min N	▷ -5.26	1.71	4.48	0.03	-0.01	1.74	BC 10
				Max V_y	-5.19	▷ 1.77	4.49	0.03	-0.01	1.84	BC 8
				Min V_y	-0.61	▷ -0.25	-1.87	0.00	-0.00	-0.41	BC 15
				Max V_z	-4.83	1.62	▷ 4.51	0.04	-0.01	1.66	BC 9
				Min V_z	-1.34	0.04	▷ -1.92	-0.01	-0.00	-0.04	BC 14
				Max M_T	-4.78	1.62	3.92	▷ 0.04	-0.01	1.63	BC 13
				Min M_T	-1.60	0.12	0.39	▷ -0.04	-0.00	0.10	BC 22
				Max M_y	-0.86	-0.17	0.44	-0.03	▷ 0.00	-0.27	BC 23
				Min M_y	-4.83	1.62	4.51	0.04	▷ -0.01	1.66	BC 9
				Max M_z	-5.19	1.77	4.49	0.03	-0.01	▷ 1.84	BC 8
				Min M_z	-0.61	-0.25	-1.87	0.00	-0.00	▷ -0.41	BC 15
			0.583	Max N	▷ 0.00	0.00	0.00	0.00	0.00	0.00	
			Links	Min N	▷ -4.82	1.50	3.30	0.03	2.34	0.77	BC 10
				Max V_y	-4.75	▷ 1.57	3.31	0.03	2.35	0.84	BC 8
				Min V_y	-0.56	▷ -0.26	-1.42	0.00	-1.01	-0.26	BC 15
				Max V_z	-4.40	1.43	▷ 3.33	0.03	2.36	0.74	BC 9
				Min V_z	-1.27	0.01	▷ -1.46	-0.01	-1.03	-0.05	BC 14
				Max M_T	-4.35	1.42	2.89	▷ 0.04	2.05	0.72	BC 13
				Min M_T	-1.52	0.10	0.28	▷ -0.04	0.20	0.03	BC 22
				Max M_y	-4.40	1.43	3.33	0.03	▷ 2.36	0.74	BC 9
				Min M_y	-1.27	0.01	-1.46	-0.01	▷ -1.03	-0.05	BC 14
				Max M_z	-4.75	1.57	3.31	0.03	2.35	▷ 0.84	BC 8
				Min M_z	-0.56	-0.26	-1.42	0.00	-1.01	▷ -0.26	BC 15
			0.583	Max N	▷ 0.00	0.00	0.00	0.00	0.00	0.00	
			Rechts	Min N	▷ -4.82	1.50	3.30	0.03	2.34	0.77	BC 10

4.12 DOORSNEDES - SNEDEKRACHTEN

Resultaatcombinaties

Staaf No.	RC	Knoop No.	Snede x [m]		Krachten [kN] N	V_y	V_z	Momenten [kNm] M_T	M_y	M_z	Bijbehorend Belastingsgeval
19	RC1			Max V_y	-4.75	▷ 1.57	3.31	0.03	2.35	0.84	BC 8
				Min V_y	-0.56	▷ -0.26	-1.42	0.00	-1.01	-0.26	BC 15
				Max V_z	-4.40	1.43	▷ 3.33	0.03	2.36	0.74	BC 9
				Min V_z	-1.27	0.01	▷ -1.46	-0.01	-1.03	-0.05	BC 14
				Max M_T	-4.35	1.42	2.89	▷ 0.04	2.05	0.72	BC 13
				Min M_T	-1.52	0.10	0.28	▷ -0.04	0.20	0.03	BC 22
				Max M_y	-4.40	1.43	3.33	0.03	▷ 2.36	0.74	BC 9
				Min M_y	-1.27	0.01	-1.46	-0.01	▷ -1.03	-0.05	BC 14
				Max M_z	-4.75	1.57	3.31	0.03	2.35	▷ 0.84	BC 8
				Min M_z	-0.56	-0.26	-1.42	0.00	-1.01	▷ -0.26	BC 15
			0.679	Max N	▷ 0.00	0.00	0.00	0.00	0.00	0.00	
			Links	Min N	▷ -4.69	1.43	2.93	0.03	2.64	0.63	BC 10
				Max V_y	-4.62	▷ 1.50	2.94	0.03	2.65	0.69	BC 8
				Min V_y	-0.55	▷ -0.25	-1.26	0.00	-1.14	-0.23	BC 15
				Max V_z	-4.27	1.36	▷ 2.95	0.03	2.66	0.60	BC 9
				Min V_z	-1.25	0.01	▷ -1.29	-0.01	-1.17	-0.06	BC 14
				Max M_T	-4.22	1.35	2.56	▷ 0.04	2.31	0.58	BC 13
				Min M_T	-1.50	0.09	0.26	▷ -0.04	0.23	0.02	BC 22
				Max M_y	-4.27	1.36	2.95	0.03	▷ 2.66	0.60	BC 9
				Min M_y	-1.25	0.01	-1.29	-0.01	▷ -1.17	-0.06	BC 14
				Max M_z	-4.62	1.50	2.94	0.03	2.65	▷ 0.69	BC 8
				Min M_z	-0.55	-0.25	-1.26	0.00	-1.14	▷ -0.23	BC 15
			0.679	Max N	▷ 0.00	0.00	0.00	0.00	0.00	0.00	
			Rechts	Min N	▷ -4.69	1.43	2.93	0.03	2.64	0.63	BC 10
				Max V_y	-4.62	▷ 1.50	2.94	0.03	2.65	0.69	BC 8
				Min V_y	-0.55	▷ -0.25	-1.26	0.00	-1.14	-0.23	BC 15
				Max V_z	-4.27	1.36	▷ 2.95	0.03	2.66	0.60	BC 9
				Min V_z	-1.25	0.01	▷ -1.29	-0.01	-1.17	-0.06	BC 14
				Max M_T	-4.22	1.35	2.56	▷ 0.04	2.31	0.58	BC 13
				Min M_T	-1.50	0.09	0.26	▷ -0.04	0.23	0.02	BC 22
				Max M_y	-4.27	1.36	2.95	0.03	▷ 2.66	0.60	BC 9
				Min M_y	-1.25	0.01	-1.29	-0.01	▷ -1.17	-0.06	BC 14
				Max M_z	-4.62	1.50	2.94	0.03	2.65	▷ 0.69	BC 8
				Min M_z	-0.55	-0.25	-1.26	0.00	-1.14	▷ -0.23	BC 15
			0.707	Max N	▷ 0.00	0.00	0.00	0.00	0.00	0.00	
			Links	Min N	▷ -4.64	1.41	2.81	0.03	2.72	0.59	BC 10
				Max V_y	-4.57	▷ 1.47	2.82	0.03	2.73	0.65	BC 8
				Min V_y	-0.55	▷ -0.25	-1.21	0.00	-1.17	-0.23	BC 15
				Max V_z	-4.23	1.34	▷ 2.83	0.03	2.74	0.56	BC 9
				Min V_z	-1.24	0.00	▷ -1.24	-0.01	-1.20	-0.06	BC 14
				Max M_T	-4.17	1.32	2.46	▷ 0.04	2.38	0.55	BC 13
				Min M_T	-1.50	0.09	0.25	▷ -0.04	0.24	0.02	BC 22
				Max M_y	-4.23	1.34	2.83	0.03	▷ 2.74	0.56	BC 9
				Min M_y	-1.24	0.00	-1.24	-0.01	▷ -1.20	-0.06	BC 14
				Max M_z	-4.57	1.47	2.82	0.03	2.73	▷ 0.65	BC 8
				Min M_z	-0.55	-0.25	-1.21	0.00	-1.17	▷ -0.23	BC 15
			0.707	Max N	▷ 0.00	0.00	0.00	0.00	0.00	0.00	
			Rechts	Min N	▷ -4.64	1.41	2.81	0.03	2.72	0.59	BC 10
				Max V_y	-4.57	▷ 1.47	2.82	0.03	2.73	0.65	BC 8
				Min V_y	-0.55	▷ -0.25	-1.21	0.00	-1.17	-0.23	BC 15
				Max V_z	-4.23	1.34	▷ 2.83	0.03	2.74	0.56	BC 9
				Min V_z	-1.24	0.00	▷ -1.24	-0.01	-1.20	-0.06	BC 14
				Max M_T	-4.17	1.32	2.46	▷ 0.04	2.38	0.55	BC 13
				Min M_T	-1.50	0.09	0.25	▷ -0.04	0.24	0.02	BC 22
				Max M_y	-4.23	1.34	2.83	0.03	▷ 2.74	0.56	BC 9
				Min M_y	-1.24	0.00	-1.24	-0.01	▷ -1.20	-0.06	BC 14
				Max M_z	-4.57	1.47	2.82	0.03	2.73	▷ 0.65	BC 8
				Min M_z	-0.55	-0.25	-1.21	0.00	-1.17	▷ -0.23	BC 15
			2.552	Max N	▷ 0.00	0.00	0.00	0.00	0.00	0.00	
			Links	Min N	▷ -1.84	0.08	-3.83	-0.00	0.79	-0.53	BC 4
				Max V_y	-1.04	▷ 0.27	-0.55	0.00	0.15	-0.35	BC 18
				Min V_y	-0.27	▷ -0.24	2.06	0.00	-0.39	0.23	BC 15
				Max V_z	-0.81	-0.13	▷ 2.14	-0.01	-0.37	0.06	BC 14
				Min V_z	-1.54	-0.12	▷ -4.62	0.02	0.96	-0.55	BC 11
				Max M_T	-1.41	-0.08	-4.00	▷ 0.03	0.86	-0.58	BC 13
				Min M_T	-1.06	-0.04	-0.33	▷ -0.04	0.16	-0.03	BC 22
				Max M_y	-1.74	0.00	-4.58	0.02	▷ 1.00	-0.70	BC 8
				Min M_y	-0.27	-0.24	2.06	0.00	▷ -0.39	0.23	BC 15
				Max M_z	-0.27	-0.24	2.06	0.00	-0.39	▷ 0.23	BC 15
				Min M_z	-1.74	0.00	-4.58	0.02	1.00	▷ -0.70	BC 8
			2.552	Max N	▷ 0.00	0.00	0.00	0.00	0.00	0.00	
			Rechts	Min N	▷ -1.84	0.08	-3.83	-0.00	0.79	-0.53	BC 4
				Max V_y	-1.04	▷ 0.27	-0.55	0.00	0.15	-0.35	BC 18
				Min V_y	-0.27	▷ -0.24	2.06	0.00	-0.39	0.23	BC 15
				Max V_z	-0.81	-0.13	▷ 2.14	-0.01	-0.37	0.06	BC 14
				Min V_z	-1.54	-0.12	▷ -4.62	0.02	0.96	-0.55	BC 11
				Max M_T	-1.41	-0.08	-4.00	▷ 0.03	0.86	-0.58	BC 13
				Min M_T	-1.06	-0.04	-0.33	▷ -0.04	0.16	-0.03	BC 22
				Max M_y	-1.74	0.00	-4.58	0.02	▷ 1.00	-0.70	BC 8
				Min M_y	-0.27	-0.24	2.06	0.00	▷ -0.39	0.23	BC 15
				Max M_z	-0.27	-0.24	2.06	0.00	-0.39	▷ 0.23	BC 15
				Min M_z	-1.74	0.00	-4.58	0.02	1.00	▷ -0.70	BC 8
			2.581	Max N	▷ 0.00	0.00	0.00	0.00	0.00	0.00	
			Links	Min N	▷ -1.81	0.07	-3.92	-0.00	0.68	-0.53	BC 4

4.12 DOORSNEDES - SNEDEKRACHTEN

Resultaatcombinaties

Staaf No.	RC	Knoop No.	Snede x [m]		Krachten [kN] N	V_y	V_z	Momenten [kNm] M_T	M_y	M_z	Bijbehorend Belastingsgeval
19	RC1			Max V_y	-1.03	▷ 0.27	-0.57	0.00	0.13	-0.36	BC 18
				Min V_y	-0.26	▷ -0.24	2.11	0.00	-0.33	0.24	BC 15
				Max V_z	-0.81	-0.13	▷ 2.19	-0.01	-0.31	0.06	BC 14
				Min V_z	-1.50	-0.14	▷ -4.73	0.02	0.83	-0.55	BC 11
				Max M_T	-1.37	-0.11	-4.09	▷ 0.03	0.74	-0.58	BC 13
				Min M_T	-1.06	-0.04	-0.34	▷ -0.04	0.15	-0.03	BC 22
				Max M_y	-1.69	-0.02	-4.68	0.02	▷ 0.87	-0.70	BC 8
				Min M_y	-0.26	-0.24	2.11	0.00	▷ -0.33	0.24	BC 15
				Max M_z	-0.26	-0.24	2.11	0.00	-0.33	▷ 0.24	BC 15
				Min M_z	-1.69	-0.02	-4.68	0.02	0.87	▷ -0.70	BC 8
			2.581	Max N	▷ 0.00	0.00	0.00	0.00	0.00	0.00	
			Rechts	Min N	▷ -1.81	0.07	-3.92	-0.00	0.68	-0.53	BC 4
				Max V_y	-1.03	▷ 0.27	-0.57	0.00	0.13	-0.36	BC 18
				Min V_y	-0.26	▷ -0.24	2.11	0.00	-0.33	0.24	BC 15
				Max V_z	-0.81	-0.13	▷ 2.19	-0.01	-0.31	0.06	BC 14
				Min V_z	-1.50	-0.14	▷ -4.73	0.02	0.83	-0.55	BC 11
				Max M_T	-1.37	-0.11	-4.09	▷ 0.03	0.74	-0.58	BC 13
				Min M_T	-1.06	-0.04	-0.34	▷ -0.04	0.15	-0.03	BC 22
				Max M_y	-1.69	-0.02	-4.68	0.02	▷ 0.87	-0.70	BC 8
				Min M_y	-0.26	-0.24	2.11	0.00	▷ -0.33	0.24	BC 15
				Max M_z	-0.26	-0.24	2.11	0.00	-0.33	▷ 0.24	BC 15
				Min M_z	-1.69	-0.02	-4.68	0.02	0.87	▷ -0.70	BC 8
			2.677	Max N	▷ 0.00	0.00	0.00	0.00	0.00	0.00	
			Links	Min N	▷ -1.71	0.02	-4.21	-0.00	0.29	-0.54	BC 4
				Max V_y	-1.00	▷ 0.25	-0.61	0.00	0.07	-0.38	BC 18
				Min V_y	-0.25	▷ -0.24	2.27	0.00	-0.12	0.26	BC 15
				Max V_z	-0.78	-0.13	▷ 2.35	-0.01	-0.09	0.07	BC 14
				Min V_z	-1.36	-0.20	▷ -5.08	0.02	0.36	-0.53	BC 11
				Max M_T	-1.23	-0.17	-4.39	▷ 0.03	0.33	-0.57	BC 13
				Min M_T	-1.04	-0.05	-0.37	▷ -0.04	0.11	-0.02	BC 22
				Max M_y	-1.56	-0.09	-5.03	0.02	▷ 0.40	-0.69	BC 8
				Min M_y	-0.25	-0.24	2.27	0.00	▷ -0.12	0.26	BC 15
				Max M_z	-0.25	-0.24	2.27	0.00	-0.12	▷ 0.26	BC 15
				Min M_z	-1.56	-0.09	-5.03	0.02	0.40	▷ -0.69	BC 8
			2.677	Max N	▷ 0.00	0.00	0.00	0.00	0.00	0.00	
			Rechts	Min N	▷ -1.71	0.02	-4.21	-0.00	0.29	-0.54	BC 4
				Max V_y	-1.00	▷ 0.25	-0.61	0.00	0.07	-0.38	BC 18
				Min V_y	-0.25	▷ -0.24	2.27	0.00	-0.11	0.26	BC 15
				Max V_z	-0.78	-0.13	▷ 2.35	-0.01	-0.09	0.07	BC 14
				Min V_z	-1.36	-0.20	▷ -5.08	0.02	0.36	-0.53	BC 11
				Max M_T	-1.23	-0.17	-4.39	▷ 0.03	0.33	-0.57	BC 13
				Min M_T	-1.04	-0.05	-0.37	▷ -0.04	0.11	-0.02	BC 22
				Max M_y	-1.56	-0.09	-5.03	0.02	▷ 0.40	-0.69	BC 8
				Min M_y	-0.25	-0.24	2.27	0.00	▷ -0.11	0.26	BC 15
				Max M_z	-0.25	-0.24	2.27	0.00	-0.11	▷ 0.26	BC 15
				Min M_z	-1.56	-0.09	-5.03	0.02	0.40	▷ -0.69	BC 8
			3.260	Max N	▷ 0.00	0.00	0.00	0.00	0.00	0.00	
			Links	Min N	▷ -1.46	-0.10	-5.03	-0.00	-2.48	-0.49	BC 4
				Max V_y	-0.90	▷ 0.21	-0.78	0.00	-0.34	-0.52	BC 18
				Min V_y	-0.90	▷ -0.41	-5.18	0.02	-2.53	-0.33	BC 1
				Max V_z	-0.71	-0.16	▷ 2.81	-0.01	1.46	0.16	BC 14
				Min V_z	-1.02	-0.37	▷ -6.02	0.02	-2.97	-0.33	BC 11
				Max M_T	-0.89	-0.34	-5.19	▷ 0.02	-2.54	-0.39	BC 13
				Min M_T	-0.96	-0.07	-0.48	▷ -0.04	-0.14	0.02	BC 22
				Max M_y	-0.71	-0.16	2.81	-0.01	▷ 1.46	0.16	BC 14
				Min M_y	-1.02	-0.37	-6.02	0.02	▷ -2.97	-0.33	BC 11
				Max M_z	-0.20	-0.24	2.72	0.00	1.39	▷ 0.40	BC 15
				Min M_z	-1.32	0.03	-5.01	0.00	-2.41	▷ -0.71	BC 2
		23	3.260	Max N	▷ 0.00	0.00	0.00	0.00	0.00	0.00	
			Rechts	Min N	▷ -1.46	-0.10	-5.03	-0.00	-2.48	-0.49	BC 4
				Max V_y	-0.90	▷ 0.21	-0.78	0.00	-0.34	-0.52	BC 18
				Min V_y	-0.90	▷ -0.41	-5.18	0.02	-2.53	-0.33	BC 1
				Max V_z	-0.71	-0.16	▷ 2.81	-0.01	1.46	0.16	BC 14
				Min V_z	-1.02	-0.37	▷ -6.02	0.02	-2.97	-0.33	BC 11
				Max M_T	-0.89	-0.34	-5.19	▷ 0.02	-2.54	-0.39	BC 13
				Min M_T	-0.96	-0.07	-0.48	▷ -0.04	-0.14	0.02	BC 22
				Max M_y	-0.71	-0.16	2.81	-0.01	▷ 1.46	0.16	BC 14
				Min M_y	-1.02	-0.37	-6.02	0.02	▷ -2.97	-0.33	BC 11
				Max M_z	-0.20	-0.24	2.72	0.00	1.39	▷ 0.40	BC 15
				Min M_z	-1.32	0.03	-5.01	0.00	-2.41	▷ -0.71	BC 2
20	RC1	187	0.000	Max N	▷ 1.25	-0.18	0.36	-0.01	0.00	-0.29	BC 21
			Links	Min N	▷ -6.38	1.64	4.76	-0.03	-0.00	1.53	BC 8
				Max V_y	-6.02	▷ 1.66	4.18	-0.01	-0.00	1.54	BC 12
				Min V_y	-0.75	▷ -0.23	0.41	-0.09	0.00	-0.37	BC 23
				Max V_z	-5.78	1.50	▷ 4.78	-0.03	-0.00	1.36	BC 9
				Min V_z	-0.42	0.07	▷ -1.92	0.01	0.00	0.02	BC 14
				Max M_T	0.02	0.20	0.63	▷ 0.02	0.00	0.27	BC 19
				Min M_T	-1.92	0.04	0.36	▷ -0.10	-0.00	-0.03	BC 22
				Max M_y	-0.75	-0.23	0.41	-0.09	▷ 0.00	-0.37	BC 23
				Min M_y	-5.78	1.50	4.78	-0.03	▷ -0.00	1.36	BC 9
				Max M_z	-6.02	1.66	4.18	-0.01	-0.00	▷ 1.54	BC 12
				Min M_z	-0.75	-0.23	0.41	-0.09	0.00	▷ -0.37	BC 23
			0.000	Max N	▷ 1.25	-0.18	0.36	-0.01	0.00	-0.29	BC 21
			Rechts	Min N	▷ -6.38	1.64	4.76	-0.03	-0.00	1.53	BC 8

4.12 DOORSNEDES - SNEDEKRACHTEN

Resultaatcombinaties

Staaf No.	RC	Knoop No.	Snede x [m]		Krachten [kN] N	V_y	V_z	Momenten [kNm] M_T	M_y	M_z	Bijbehorend Belastingsgeval
20	RC1			Max V_y	-6.02	▷ 1.66	4.18	-0.01	-0.00	1.54	BC 12
				Min V_y	-0.75	▷ -0.23	0.41	-0.09	0.00	-0.37	BC 23
				Max V_z	-5.78	1.50	▷ 4.78	-0.03	-0.00	1.36	BC 9
				Min V_z	-0.42	0.07	▷ -1.92	0.01	0.00	0.02	BC 14
				Max M_T	0.02	0.20	0.63	▷ 0.02	0.00	0.27	BC 19
				Min M_T	-1.92	0.04	0.36	▷ -0.10	-0.00	-0.03	BC 22
				Max M_y	-0.75	-0.23	0.41	-0.09	▷ 0.00	-0.37	BC 23
				Min M_y	-5.78	1.50	4.78	-0.03	▷ -0.00	1.36	BC 9
				Max M_z	-6.02	1.66	4.18	-0.01	-0.00	▷ 1.54	BC 12
				Min M_z	-0.75	-0.23	0.41	-0.09	0.00	▷ -0.37	BC 23
			0.583	Max N	▷ 1.30	-0.18	0.24	-0.01	0.18	-0.19	BC 21
			Links	Min N	▷ -5.92	1.42	3.52	-0.04	2.50	0.61	BC 8
				Max V_y	-5.55	▷ 1.43	3.08	-0.01	2.20	0.62	BC 12
				Min V_y	-0.70	▷ -0.23	0.28	-0.09	0.21	-0.24	BC 23
				Max V_z	-5.33	1.29	▷ 3.53	-0.04	2.51	0.52	BC 9
				Min V_z	-0.35	0.05	▷ -1.45	0.01	-1.03	-0.02	BC 14
				Max M_T	0.10	0.18	0.45	▷ 0.02	0.33	0.15	BC 19
				Min M_T	-1.85	0.02	0.26	▷ -0.10	0.19	-0.05	BC 22
				Max M_y	-5.33	1.29	3.53	-0.04	▷ 2.51	0.52	BC 9
				Min M_y	-0.35	0.05	-1.45	0.01	▷ -1.03	-0.02	BC 14
				Max M_z	-5.55	1.43	3.08	-0.01	2.20	▷ 0.62	BC 12
				Min M_z	-0.70	-0.23	0.28	-0.09	0.21	▷ -0.24	BC 23
			0.583	Max N	▷ 1.30	-0.18	0.24	-0.01	0.18	-0.19	BC 21
			Rechts	Min N	▷ -5.92	1.42	3.52	-0.04	2.50	0.61	BC 8
				Max V_y	-5.55	▷ 1.43	3.08	-0.01	2.20	0.62	BC 12
				Min V_y	-0.70	▷ -0.23	0.28	-0.09	0.21	-0.24	BC 23
				Max V_z	-5.33	1.29	▷ 3.53	-0.04	2.51	0.52	BC 9
				Min V_z	-0.35	0.05	▷ -1.45	0.01	-1.03	-0.02	BC 14
				Max M_T	0.10	0.18	0.45	▷ 0.02	0.33	0.15	BC 19
				Min M_T	-1.85	0.02	0.26	▷ -0.10	0.19	-0.05	BC 22
				Max M_y	-5.33	1.29	3.53	-0.04	▷ 2.51	0.52	BC 9
				Min M_y	-0.35	0.05	-1.45	0.01	▷ -1.03	-0.02	BC 14
				Max M_z	-5.55	1.43	3.08	-0.01	2.20	▷ 0.62	BC 12
				Min M_z	-0.70	-0.23	0.28	-0.09	0.21	▷ -0.24	BC 23
			0.679	Max N	▷ 1.31	-0.18	0.21	-0.01	0.20	-0.17	BC 21
			Links	Min N	▷ -5.77	1.34	3.12	-0.04	2.82	0.48	BC 8
				Max V_y	-5.40	▷ 1.35	2.73	-0.01	2.48	0.49	BC 12
				Min V_y	-0.69	▷ -0.23	0.25	-0.09	0.24	-0.21	BC 23
				Max V_z	-5.19	1.21	▷ 3.13	-0.04	2.83	0.40	BC 9
				Min V_z	-0.33	0.04	▷ -1.29	0.01	-1.16	-0.02	BC 14
				Max M_T	0.12	0.18	0.40	▷ 0.02	0.37	0.14	BC 19
				Min M_T	-1.83	0.01	0.23	▷ -0.10	0.21	-0.06	BC 22
				Max M_y	-5.19	1.21	3.13	-0.04	▷ 2.83	0.40	BC 9
				Min M_y	-0.33	0.04	-1.29	0.01	▷ -1.16	-0.02	BC 14
				Max M_z	-5.40	1.35	2.73	-0.01	2.48	▷ 0.49	BC 12
				Min M_z	-0.69	-0.23	0.25	-0.09	0.24	▷ -0.21	BC 23
			0.679	Max N	▷ 1.31	-0.18	0.21	-0.01	0.20	-0.17	BC 21
			Rechts	Min N	▷ -5.77	1.34	3.12	-0.04	2.82	0.48	BC 8
				Max V_y	-5.40	▷ 1.35	2.73	-0.01	2.48	0.49	BC 12
				Min V_y	-0.69	▷ -0.23	0.25	-0.09	0.24	-0.21	BC 23
				Max V_z	-5.19	1.21	▷ 3.13	-0.04	2.83	0.40	BC 9
				Min V_z	-0.33	0.04	▷ -1.29	0.01	-1.16	-0.02	BC 14
				Max M_T	0.12	0.18	0.40	▷ 0.02	0.37	0.14	BC 19
				Min M_T	-1.83	0.01	0.23	▷ -0.10	0.21	-0.06	BC 22
				Max M_y	-5.19	1.21	3.13	-0.04	▷ 2.83	0.40	BC 9
				Min M_y	-0.33	0.04	-1.29	0.01	▷ -1.16	-0.02	BC 14
				Max M_z	-5.40	1.35	2.73	-0.01	2.48	▷ 0.49	BC 12
				Min M_z	-0.69	-0.23	0.25	-0.09	0.24	▷ -0.21	BC 23
			0.707	Max N	▷ 1.32	-0.18	0.20	-0.01	0.21	-0.16	BC 21
			Links	Min N	▷ -5.73	1.31	2.99	-0.04	2.91	0.44	BC 8
				Max V_y	-5.36	▷ 1.32	2.62	-0.01	2.55	0.45	BC 12
				Min V_y	-0.68	▷ -0.23	0.24	-0.09	0.24	-0.21	BC 23
				Max V_z	-5.15	1.19	▷ 3.00	-0.04	2.91	0.36	BC 9
				Min V_z	-0.33	0.04	▷ -1.24	0.01	-1.20	-0.02	BC 14
				Max M_T	0.13	0.18	0.39	▷ 0.02	0.38	0.13	BC 19
				Min M_T	-1.82	0.01	0.22	▷ -0.10	0.22	-0.06	BC 22
				Max M_y	-5.15	1.19	3.00	-0.04	▷ 2.91	0.36	BC 9
				Min M_y	-0.33	0.04	-1.24	0.01	▷ -1.20	-0.02	BC 14
				Max M_z	-5.36	1.32	2.62	-0.01	2.55	▷ 0.45	BC 12
				Min M_z	-0.68	-0.23	0.24	-0.09	0.24	▷ -0.21	BC 23
			0.707	Max N	▷ 1.32	-0.18	0.20	-0.01	0.21	-0.16	BC 21
			Rechts	Min N	▷ -5.73	1.31	2.99	-0.04	2.91	0.44	BC 8
				Max V_y	-5.36	▷ 1.32	2.62	-0.01	2.55	0.45	BC 12
				Min V_y	-0.68	▷ -0.23	0.24	-0.09	0.24	-0.21	BC 23
				Max V_z	-5.15	1.19	▷ 3.00	-0.04	2.91	0.36	BC 9
				Min V_z	-0.33	0.04	▷ -1.24	0.01	-1.20	-0.02	BC 14
				Max M_T	0.13	0.18	0.39	▷ 0.02	0.38	0.13	BC 19
				Min M_T	-1.82	0.01	0.22	▷ -0.10	0.22	-0.06	BC 22
				Max M_y	-5.15	1.19	3.00	-0.04	▷ 2.91	0.36	BC 9
				Min M_y	-0.33	0.04	-1.24	0.01	▷ -1.20	-0.02	BC 14
				Max M_z	-5.36	1.32	2.62	-0.01	2.55	▷ 0.45	BC 12
				Min M_z	-0.68	-0.23	0.24	-0.09	0.24	▷ -0.21	BC 23
			2.552	Max N	▷ 1.59	-0.17	-0.48	-0.01	-0.05	0.16	BC 21
			Links	Min N	▷ -2.69	-0.28	-4.89	-0.05	1.04	-0.49	BC 8

4.12 DOORSNEDES - SNEDEKRACHTEN

Resultaatcombinaties

Staaf No.	RC	Knoop No.	Snede x [m]		Krachten [kN] N	V_y	V_z	Momenten [kNm] M_T	M_y	M_z	Bijbehorend Belastingsgeval
20	RC1			Max V_y	-0.45	▷ 0.21	-0.53	0.02	0.20	-0.29	BC 18
				Min V_y	-1.88	▷ -0.39	-4.29	-0.04	0.89	-0.40	BC 1
				Max V_z	0.10	-0.09	▷ 2.13	0.01	-0.37	0.02	BC 14
				Min V_z	-1.82	-0.37	▷ -4.93	-0.05	0.99	-0.37	BC 11
				Max M_T	0.54	0.11	-0.61	▷ 0.02	0.18	-0.14	BC 19
				Min M_T	-1.39	-0.12	-0.36	▷ -0.10	0.08	0.05	BC 22
				Max M_y	-2.69	-0.28	-4.89	-0.05	▷ 1.04	-0.49	BC 8
				Min M_y	1.08	-0.18	2.05	0.02	▷ -0.39	0.18	BC 15
				Max M_z	-0.41	-0.21	-0.44	-0.09	0.06	▷ 0.20	BC 23
				Min M_z	-2.69	-0.28	-4.89	-0.05	1.04	▷ -0.49	BC 8
			2.552	Max N	▷ 1.59	-0.17	-0.48	-0.01	-0.05	0.16	BC 21
			Rechts	Min N	▷ -2.69	-0.28	-4.89	-0.05	1.04	-0.49	BC 8
				Max V_y	-0.45	▷ 0.21	-0.53	0.02	0.20	-0.29	BC 18
				Min V_y	-1.88	▷ -0.39	-4.29	-0.04	0.89	-0.40	BC 1
				Max V_z	0.10	-0.09	▷ 2.13	0.01	-0.37	0.02	BC 14
				Min V_z	-1.82	-0.37	▷ -4.93	-0.05	0.99	-0.37	BC 11
				Max M_T	0.54	0.11	-0.61	▷ 0.02	0.18	-0.14	BC 19
				Min M_T	-1.39	-0.12	-0.36	▷ -0.10	0.08	0.05	BC 22
				Max M_y	-2.69	-0.28	-4.89	-0.05	▷ 1.04	-0.49	BC 8
				Min M_y	1.08	-0.18	2.05	0.02	▷ -0.39	0.18	BC 15
				Max M_z	-0.41	-0.21	-0.44	-0.09	0.06	▷ 0.20	BC 23
				Min M_z	-2.69	-0.28	-4.89	-0.05	1.04	▷ -0.49	BC 8
			2.581	Max N	▷ 1.60	-0.17	-0.49	-0.01	-0.07	0.16	BC 21
			Links	Min N	▷ -2.64	-0.30	-5.00	-0.05	0.90	-0.48	BC 8
				Max V_y	-0.44	▷ 0.20	-0.54	0.02	0.19	-0.30	BC 18
				Min V_y	-1.84	▷ -0.41	-4.39	-0.04	0.76	-0.38	BC 1
				Max V_z	0.11	-0.09	▷ 2.18	0.01	-0.31	0.02	BC 14
				Min V_z	-1.77	-0.39	▷ -5.05	-0.05	0.85	-0.36	BC 11
				Max M_T	0.55	0.11	-0.62	▷ 0.02	0.16	-0.14	BC 19
				Min M_T	-1.38	-0.12	-0.37	▷ -0.10	0.07	0.05	BC 22
				Max M_y	-2.64	-0.30	-5.00	-0.05	▷ 0.90	-0.48	BC 8
				Min M_y	1.09	-0.18	2.10	0.02	▷ -0.34	0.18	BC 15
				Max M_z	-0.40	-0.21	-0.45	-0.09	0.05	▷ 0.20	BC 23
				Min M_z	-2.64	-0.30	-5.00	-0.05	0.90	▷ -0.48	BC 8
			2.581	Max N	▷ 1.60	-0.17	-0.49	-0.01	-0.07	0.16	BC 21
			Rechts	Min N	▷ -2.64	-0.30	-5.00	-0.05	0.90	-0.48	BC 8
				Max V_y	-0.44	▷ 0.20	-0.54	0.02	0.19	-0.30	BC 18
				Min V_y	-1.84	▷ -0.41	-4.39	-0.04	0.76	-0.38	BC 1
				Max V_z	0.11	-0.09	▷ 2.18	0.01	-0.31	0.02	BC 14
				Min V_z	-1.77	-0.39	▷ -5.05	-0.05	0.85	-0.36	BC 11
				Max M_T	0.55	0.11	-0.62	▷ 0.02	0.16	-0.14	BC 19
				Min M_T	-1.38	-0.12	-0.37	▷ -0.10	0.07	0.05	BC 22
				Max M_y	-2.64	-0.30	-5.00	-0.05	▷ 0.90	-0.48	BC 8
				Min M_y	1.09	-0.18	2.10	0.02	▷ -0.34	0.18	BC 15
				Max M_z	-0.40	-0.21	-0.45	-0.09	0.05	▷ 0.20	BC 23
				Min M_z	-2.64	-0.30	-5.00	-0.05	0.90	▷ -0.48	BC 8
			2.677	Max N	▷ 1.61	-0.17	-0.52	-0.01	-0.12	0.18	BC 21
			Links	Min N	▷ -2.49	-0.38	-5.37	-0.05	0.40	-0.45	BC 8
				Max V_y	-0.41	▷ 0.19	-0.59	0.02	0.13	-0.32	BC 18
				Min V_y	-1.70	▷ -0.48	-4.71	-0.04	0.32	-0.34	BC 1
				Max V_z	0.13	-0.10	▷ 2.35	0.01	-0.09	0.03	BC 14
				Min V_z	-1.63	-0.46	▷ -5.42	-0.05	0.34	-0.32	BC 11
				Max M_T	0.57	0.11	-0.67	▷ 0.02	0.10	-0.15	BC 19
				Min M_T	-1.36	-0.13	-0.40	▷ -0.10	0.04	0.06	BC 22
				Max M_y	-2.49	-0.38	-5.37	-0.05	▷ 0.40	-0.45	BC 8
				Min M_y	1.10	-0.18	2.26	0.02	▷ -0.13	0.20	BC 15
				Max M_z	-0.39	-0.21	-0.48	-0.09	0.00	▷ 0.23	BC 23
				Min M_z	-1.68	-0.09	-3.02	0.00	0.30	▷ -0.46	BC 6
			2.677	Max N	▷ 1.61	-0.17	-0.52	-0.01	-0.12	0.18	BC 21
			Rechts	Min N	▷ -2.49	-0.38	-5.37	-0.05	0.40	-0.45	BC 8
				Max V_y	-0.41	▷ 0.19	-0.59	0.02	0.13	-0.32	BC 18
				Min V_y	-1.70	▷ -0.48	-4.72	-0.04	0.32	-0.34	BC 1
				Max V_z	0.13	-0.10	▷ 2.35	0.01	-0.09	0.03	BC 14
				Min V_z	-1.63	-0.46	▷ -5.42	-0.05	0.34	-0.32	BC 11
				Max M_T	0.57	0.11	-0.67	▷ 0.02	0.10	-0.15	BC 19
				Min M_T	-1.36	-0.13	-0.40	▷ -0.10	0.04	0.06	BC 22
				Max M_y	-2.49	-0.38	-5.37	-0.05	▷ 0.40	-0.45	BC 8
				Min M_y	1.10	-0.18	2.26	0.02	▷ -0.13	0.20	BC 15
				Max M_z	-0.39	-0.21	-0.48	-0.09	0.00	▷ 0.23	BC 23
				Min M_z	-1.68	-0.09	-3.02	0.00	0.30	▷ -0.46	BC 6
			3.260	Max N	▷ 1.66	-0.17	-0.65	-0.01	-0.46	0.28	BC 21
			Links	Min N	▷ -2.16	-0.22	-5.24	-0.05	-2.53	-0.34	BC 2
				Max V_y	-0.32	▷ 0.15	-0.75	0.02	-0.27	-0.42	BC 18
				Min V_y	-1.33	▷ -0.68	-5.57	-0.04	-2.76	0.03	BC 1
				Max V_z	0.20	-0.12	▷ 2.81	0.01	1.46	0.10	BC 14
				Min V_z	-1.27	-0.64	▷ -6.42	-0.05	-3.21	0.03	BC 11
				Max M_T	0.65	0.09	-0.85	▷ 0.02	-0.36	-0.21	BC 19
				Min M_T	-1.29	-0.15	-0.50	▷ -0.10	-0.23	0.15	BC 22
				Max M_y	0.20	-0.12	2.81	0.01	▷ 1.46	0.10	BC 14
				Min M_y	-1.27	-0.64	-6.42	-0.05	▷ -3.21	0.03	BC 11
				Max M_z	-0.34	-0.21	-0.60	-0.09	-0.32	▷ 0.35	BC 23
				Min M_z	-0.32	0.15	-0.75	0.02	-0.27	▷ -0.42	BC 18
		22	3.260	Max N	▷ 1.66	-0.17	-0.65	-0.01	-0.46	0.28	BC 21
			Rechts	Min N	▷ -2.16	-0.22	-5.24	-0.05	-2.53	-0.34	BC 2

4.12 DOORSNEDES - SNEDEKRACHTEN

Resultaatcombinaties

Staaf No.	RC	Knoop No.	Snede x [m]		Krachten [kN] N	V_y	V_z	Momenten [kNm] M_T	M_y	M_z	Bijbehorend Belastingsgeval
20	RC1			Max V_y	-0.32	▷ 0.15	-0.75	0.02	-0.27	-0.42	BC 18
				Min V_y	-1.33	▷ -0.68	-5.57	-0.04	-2.76	0.03	BC 1
				Max V_z	0.20	-0.12	▷ 2.81	0.01	1.46	0.10	BC 14
				Min V_z	-1.27	-0.64	▷ -6.42	-0.05	-3.21	0.03	BC 11
				Max M_T	0.65	0.09	-0.85	▷ 0.02	-0.36	-0.21	BC 19
				Min M_T	-1.29	-0.15	-0.50	▷ -0.10	-0.23	0.15	BC 22
				Max M_y	0.20	-0.12	2.81	0.01	▷ 1.46	0.10	BC 14
				Min M_y	-1.27	-0.64	-6.42	-0.05	▷ -3.21	0.03	BC 11
				Max M_z	-0.34	-0.21	-0.60	-0.09	-0.32	▷ 0.35	BC 23
				Min M_z	-0.32	0.15	-0.75	0.02	-0.27	▷ -0.42	BC 18
21	RC1	210	0.000	Max N	▷ 1.48	0.38	1.91	-0.10	-0.00	0.41	BC 23
			Links	Min N	▷ -6.51	1.57	-4.76	0.05	0.01	1.44	BC 12
				Max V_y	-5.69	▷ 1.69	-4.75	0.03	0.00	1.54	BC 9
				Min V_y	0.00	▷ 0.00	0.00	0.00	0.00	0.00	
				Max V_z	0.93	0.16	▷ 1.92	-0.02	-0.00	0.04	BC 15
				Min V_z	-6.38	1.64	▷ -4.76	0.03	0.00	1.53	BC 8
				Max M_T	-5.37	1.09	-3.88	▷ 0.08	0.01	1.06	BC 6
				Min M_T	1.48	0.38	1.91	▷ -0.10	-0.00	0.41	BC 23
				Max M_y	-6.51	1.57	-4.76	0.05	▷ 0.01	1.44	BC 12
				Min M_y	1.48	0.38	1.91	-0.10	▷ -0.00	0.41	BC 23
				Max M_z	-5.69	1.69	-4.75	0.03	0.00	▷ 1.54	BC 9
				Min M_z	0.00	0.00	0.00	0.00	0.00	▷ 0.00	
			0.000	Max N	▷ 1.48	0.38	1.91	-0.10	-0.00	0.41	BC 23
			Rechts	Min N	▷ -6.51	1.57	-4.76	0.05	0.01	1.44	BC 12
				Max V_y	-5.69	▷ 1.69	-4.75	0.03	0.00	1.54	BC 9
				Min V_y	0.00	▷ 0.00	0.00	0.00	0.00	0.00	
				Max V_z	0.93	0.16	▷ 1.92	-0.02	-0.00	0.04	BC 15
				Min V_z	-6.38	1.64	▷ -4.76	0.03	0.00	1.53	BC 8
				Max M_T	-5.37	1.09	-3.88	▷ 0.08	0.01	1.06	BC 6
				Min M_T	1.48	0.38	1.91	▷ -0.10	-0.00	0.41	BC 23
				Max M_y	-6.51	1.57	-4.76	0.05	▷ 0.01	1.44	BC 12
				Min M_y	1.48	0.38	1.91	-0.10	▷ -0.00	0.41	BC 23
				Max M_z	-5.69	1.69	-4.75	0.03	0.00	▷ 1.54	BC 9
				Min M_z	0.00	0.00	0.00	0.00	0.00	▷ 0.00	
			0.583	Max N	▷ 1.53	0.33	1.45	-0.10	1.02	0.19	BC 23
			Links	Min N	▷ -6.05	1.36	-3.52	0.06	-2.50	0.55	BC 12
				Max V_y	-5.24	▷ 1.45	-3.50	0.03	-2.49	0.60	BC 9
				Min V_y	0.00	▷ 0.00	0.00	0.00	0.00	0.00	
				Max V_z	0.97	0.11	▷ 1.47	-0.03	1.04	-0.04	BC 15
				Min V_z	-5.92	1.42	▷ -3.52	0.04	-2.50	0.61	BC 8
				Max M_T	-5.05	0.95	-2.87	▷ 0.08	-2.04	0.44	BC 6
				Min M_T	1.53	0.33	1.45	▷ -0.10	1.02	0.19	BC 23
				Max M_y	0.97	0.11	1.47	-0.03	▷ 1.04	-0.04	BC 15
				Min M_y	-5.92	1.42	-3.52	0.04	▷ -2.50	0.61	BC 8
				Max M_z	-5.92	1.42	-3.52	0.04	-2.50	▷ 0.61	BC 8
				Min M_z	0.97	0.11	1.47	-0.03	1.04	▷ -0.04	BC 15
			0.583	Max N	▷ 1.53	0.33	1.45	-0.10	1.02	0.19	BC 23
			Rechts	Min N	▷ -6.05	1.36	-3.52	0.06	-2.50	0.55	BC 12
				Max V_y	-5.24	▷ 1.45	-3.50	0.03	-2.49	0.60	BC 9
				Min V_y	0.00	▷ 0.00	0.00	0.00	0.00	0.00	
				Max V_z	0.97	0.11	▷ 1.47	-0.03	1.04	-0.04	BC 15
				Min V_z	-5.92	1.42	▷ -3.52	0.04	-2.50	0.61	BC 8
				Max M_T	-5.05	0.95	-2.87	▷ 0.08	-2.04	0.44	BC 6
				Min M_T	1.53	0.33	1.45	▷ -0.10	1.02	0.19	BC 23
				Max M_y	0.97	0.11	1.47	-0.03	▷ 1.04	-0.04	BC 15
				Min M_y	-5.92	1.42	-3.52	0.04	▷ -2.50	0.61	BC 8
				Max M_z	-5.92	1.42	-3.52	0.04	-2.50	▷ 0.61	BC 8
				Min M_z	0.97	0.11	1.47	-0.03	1.04	▷ -0.04	BC 15
			0.679	Max N	▷ 1.54	0.32	1.28	-0.10	1.15	0.16	BC 23
			Links	Min N	▷ -5.90	1.28	-3.12	0.06	-2.82	0.43	BC 12
				Max V_y	-5.10	▷ 1.37	-3.10	0.03	-2.81	0.46	BC 9
				Min V_y	0.00	▷ 0.00	0.00	0.00	0.00	0.00	
				Max V_z	0.98	0.10	▷ 1.30	-0.03	1.17	-0.05	BC 15
				Min V_z	-5.77	1.34	▷ -3.12	0.04	-2.82	0.48	BC 8
				Max M_T	-4.95	0.90	-2.55	▷ 0.08	-2.30	0.35	BC 6
				Min M_T	1.54	0.32	1.28	▷ -0.10	1.15	0.16	BC 23
				Max M_y	0.98	0.10	1.30	-0.03	▷ 1.17	-0.05	BC 15
				Min M_y	-5.77	1.34	-3.12	0.04	▷ -2.82	0.48	BC 8
				Max M_z	-5.77	1.34	-3.12	0.04	-2.82	▷ 0.48	BC 8
				Min M_z	0.98	0.10	1.30	-0.03	1.17	▷ -0.05	BC 15
			0.679	Max N	▷ 1.54	0.32	1.28	-0.10	1.15	0.16	BC 23
			Rechts	Min N	▷ -5.90	1.28	-3.12	0.06	-2.82	0.43	BC 12
				Max V_y	-5.10	▷ 1.37	-3.10	0.03	-2.81	0.46	BC 9
				Min V_y	0.00	▷ 0.00	0.00	0.00	0.00	0.00	
				Max V_z	0.98	0.10	▷ 1.30	-0.03	1.17	-0.05	BC 15
				Min V_z	-5.77	1.34	▷ -3.12	0.04	-2.82	0.48	BC 8
				Max M_T	-4.95	0.90	-2.55	▷ 0.08	-2.30	0.35	BC 6
				Min M_T	1.54	0.32	1.28	▷ -0.10	1.15	0.16	BC 23
				Max M_y	0.98	0.10	1.30	-0.03	▷ 1.17	-0.05	BC 15
				Min M_y	-5.77	1.34	-3.12	0.04	▷ -2.82	0.48	BC 8
				Max M_z	-5.77	1.34	-3.12	0.04	-2.82	▷ 0.48	BC 8
				Min M_z	0.98	0.10	1.30	-0.03	1.17	▷ -0.05	BC 15
			0.707	Max N	▷ 1.54	0.32	1.23	-0.10	1.19	0.15	BC 23
			Links	Min N	▷ -5.85	1.25	-2.99	0.06	-2.90	0.39	BC 12

4.12 DOORSNEDES - SNEDEKRACHTEN

Resultaatcombinaties

Staaf No.	RC	Knoop No.	Snede x [m]		Krachten [kN] N	V_y	V_z	Momenten [kNm] M_T	M_y	M_z	Bijbehorend Belastingsgeval
21	RC1			Max V_y	-5.06	▷ 1.34	-2.98	0.03	-2.90	0.43	BC 9
				Min V_y	0.00	▷ 0.00	0.00	0.00	0.00	0.00	
				Max V_z	0.99	0.10	▷ 1.25	-0.03	1.21	-0.06	BC 15
				Min V_z	-5.73	1.31	▷ -2.99	0.04	-2.91	0.44	BC 8
				Max M_T	-4.92	0.89	-2.45	▷ 0.08	-2.37	0.32	BC 6
				Min M_T	1.54	0.32	1.23	▷ -0.10	1.19	0.15	BC 23
				Max M_y	0.99	0.10	1.25	-0.03	▷ 1.21	-0.06	BC 15
				Min M_y	-5.73	1.31	-2.99	0.04	▷ -2.91	0.44	BC 8
				Max M_z	-5.73	1.31	-2.99	0.04	-2.91	▷ 0.44	BC 8
				Min M_z	0.99	0.10	1.25	-0.03	1.21	▷ -0.06	BC 15
			0.707	Max N	▷ 1.54	0.32	1.23	-0.10	1.19	0.15	BC 23
			Rechts	Min N	▷ -5.85	1.25	-2.99	0.06	-2.90	0.39	BC 12
				Max V_y	-5.05	▷ 1.34	-2.98	0.03	-2.90	0.43	BC 9
				Min V_y	0.00	▷ 0.00	0.00	0.00	0.00	0.00	
				Max V_z	0.99	0.10	▷ 1.25	-0.03	1.21	-0.06	BC 15
				Min V_z	-5.73	1.31	▷ -2.99	0.04	-2.91	0.44	BC 8
				Max M_T	-4.92	0.89	-2.45	▷ 0.08	-2.37	0.32	BC 6
				Min M_T	1.54	0.32	1.23	▷ -0.10	1.19	0.15	BC 23
				Max M_y	0.99	0.10	1.25	-0.03	▷ 1.21	-0.06	BC 15
				Min M_y	-5.73	1.31	-2.99	0.04	▷ -2.91	0.44	BC 8
				Max M_z	-5.73	1.31	-2.99	0.04	-2.91	▷ 0.44	BC 8
				Min M_z	0.99	0.10	1.25	-0.03	1.21	▷ -0.06	BC 15
			2.552	Max N	▷ 1.82	0.03	-2.10	-0.11	0.39	-0.16	BC 23
			Links	Min N	▷ -2.82	-0.12	4.00	0.09	-0.86	-0.37	BC 6
				Max V_y	0.65	▷ 0.15	-2.15	-0.09	0.32	-0.19	BC 22
				Min V_y	-2.22	▷ -0.39	4.91	0.06	-0.99	-0.43	BC 13
				Max V_z	-1.73	-0.39	▷ 4.91	0.05	-0.97	-0.43	BC 11
				Min V_z	0.65	0.15	▷ -2.15	-0.09	0.32	-0.19	BC 22
				Max M_T	-2.82	-0.12	4.00	▷ 0.09	-0.86	-0.37	BC 6
				Min M_T	1.82	0.03	-2.10	▷ -0.11	0.39	-0.16	BC 23
				Max M_y	1.26	-0.21	-2.08	-0.03	▷ 0.44	0.05	BC 15
				Min M_y	-2.69	-0.28	4.89	0.05	▷ -1.04	-0.49	BC 8
				Max M_z	1.26	-0.21	-2.08	-0.03	0.44	▷ 0.05	BC 15
				Min M_z	-2.69	-0.28	4.89	0.05	-1.04	▷ -0.49	BC 8
			2.552	Max N	▷ 1.82	0.03	-2.10	-0.11	0.39	-0.16	BC 23
			Rechts	Min N	▷ -2.82	-0.12	4.00	0.09	-0.86	-0.37	BC 6
				Max V_y	0.65	▷ 0.15	-2.15	-0.09	0.32	-0.19	BC 22
				Min V_y	-2.22	▷ -0.39	4.91	0.06	-0.99	-0.43	BC 13
				Max V_z	-1.73	-0.39	▷ 4.91	0.05	-0.97	-0.43	BC 11
				Min V_z	0.65	0.15	▷ -2.15	-0.09	0.32	-0.19	BC 22
				Max M_T	-2.82	-0.12	4.00	▷ 0.09	-0.86	-0.37	BC 6
				Min M_T	1.82	0.03	-2.10	▷ -0.11	0.39	-0.16	BC 23
				Max M_y	1.26	-0.21	-2.08	-0.03	▷ 0.44	0.05	BC 15
				Min M_y	-2.69	-0.28	4.89	0.05	▷ -1.04	-0.49	BC 8
				Max M_z	1.26	-0.21	-2.08	-0.03	0.44	▷ 0.05	BC 15
				Min M_z	-2.69	-0.28	4.89	0.05	-1.04	▷ -0.49	BC 8
			2.581	Max N	▷ 1.82	0.02	-2.15	-0.11	0.33	-0.16	BC 23
			Links	Min N	▷ -2.79	-0.14	4.10	0.09	-0.75	-0.36	BC 6
				Max V_y	0.66	▷ 0.15	-2.20	-0.09	0.26	-0.20	BC 22
				Min V_y	-2.18	▷ -0.41	5.02	0.06	-0.85	-0.41	BC 13
				Max V_z	-1.68	-0.41	▷ 5.03	0.05	-0.83	-0.42	BC 11
				Min V_z	0.66	0.15	▷ -2.20	-0.09	0.26	-0.20	BC 22
				Max M_T	-2.79	-0.14	4.10	▷ 0.09	-0.75	-0.36	BC 6
				Min M_T	1.82	0.02	-2.15	▷ -0.11	0.33	-0.16	BC 23
				Max M_y	1.27	-0.22	-2.14	-0.03	▷ 0.38	0.06	BC 15
				Min M_y	-2.64	-0.30	5.00	0.05	▷ -0.90	-0.48	BC 8
				Max M_z	1.27	-0.22	-2.14	-0.03	0.38	▷ 0.06	BC 15
				Min M_z	-2.64	-0.30	5.00	0.05	-0.90	▷ -0.48	BC 8
			2.581	Max N	▷ 1.82	0.02	-2.15	-0.11	0.33	-0.16	BC 23
			Rechts	Min N	▷ -2.79	-0.14	4.10	0.09	-0.75	-0.36	BC 6
				Max V_y	0.66	▷ 0.15	-2.20	-0.09	0.26	-0.20	BC 22
				Min V_y	-2.18	▷ -0.41	5.02	0.06	-0.85	-0.41	BC 13
				Max V_z	-1.68	-0.41	▷ 5.03	0.05	-0.83	-0.42	BC 11
				Min V_z	0.66	0.15	▷ -2.20	-0.09	0.26	-0.20	BC 22
				Max M_T	-2.79	-0.14	4.10	▷ 0.09	-0.75	-0.36	BC 6
				Min M_T	1.82	0.02	-2.15	▷ -0.11	0.33	-0.16	BC 23
				Max M_y	1.27	-0.22	-2.14	-0.03	▷ 0.38	0.06	BC 15
				Min M_y	-2.64	-0.30	5.00	0.05	▷ -0.90	-0.48	BC 8
				Max M_z	1.27	-0.22	-2.14	-0.03	0.38	▷ 0.06	BC 15
				Min M_z	-2.64	-0.30	5.00	0.05	-0.90	▷ -0.48	BC 8
			2.677	Max N	▷ 1.83	0.01	-2.32	-0.11	0.11	-0.16	BC 23
			Links	Min N	▷ -2.69	-0.19	4.40	0.09	-0.34	-0.35	BC 6
				Max V_y	0.68	▷ 0.14	-2.37	-0.09	0.04	-0.21	BC 22
				Min V_y	-2.03	▷ -0.49	5.39	0.06	-0.35	-0.37	BC 13
				Max V_z	-1.54	-0.49	▷ 5.40	0.05	-0.32	-0.38	BC 11
				Min V_z	0.68	0.14	▷ -2.37	-0.09	0.04	-0.21	BC 22
				Max M_T	-2.69	-0.19	4.40	▷ 0.09	-0.34	-0.35	BC 6
				Min M_T	1.83	0.01	-2.32	▷ -0.11	0.11	-0.16	BC 23
				Max M_y	1.28	-0.23	-2.30	-0.03	▷ 0.16	0.08	BC 15
				Min M_y	-2.49	-0.38	5.37	0.05	▷ -0.40	-0.45	BC 8
				Max M_z	1.28	-0.23	-2.30	-0.03	0.16	▷ 0.08	BC 15
				Min M_z	-2.43	-0.09	4.39	0.05	-0.36	▷ -0.46	BC 2
			2.677	Max N	▷ 1.83	0.01	-2.32	-0.11	0.11	-0.16	BC 23
			Rechts	Min N	▷ -2.69	-0.19	4.40	0.09	-0.34	-0.35	BC 6

4.12 DOORSNEDES - SNEDEKRACHTEN

Resultaatcombinaties

Staaf No.	RC	Knoop No.	Snede x [m]		Krachten [kN] N	V_y	V_z	Momenten [kNm] M_T	M_y	M_z	Bijbehorend Belastingsgeval
21	RC1			Max V_y	0.68	▷ 0.14	-2.37	-0.09	0.04	-0.21	BC 22
				Min V_y	-2.03	▷ -0.49	5.39	0.06	-0.35	-0.37	BC 13
				Max V_z	-1.54	-0.49	▷ 5.40	0.05	-0.32	-0.38	BC 11
				Min V_z	0.68	0.14	▷ -2.37	-0.09	0.04	-0.21	BC 22
				Max M_T	-2.69	-0.19	4.40	▷ 0.09	-0.34	-0.35	BC 6
				Min M_T	1.83	0.01	-2.32	▷ -0.11	0.11	-0.16	BC 23
				Max M_y	1.28	-0.23	-2.30	-0.03	▷ 0.16	0.08	BC 15
				Min M_y	-2.49	-0.38	5.37	0.05	▷ -0.40	-0.45	BC 8
				Max M_z	1.28	-0.23	-2.30	-0.03	0.16	▷ 0.08	BC 15
				Min M_z	-2.43	-0.09	4.39	0.05	-0.36	▷ -0.46	BC 2
			3.260	Max N	▷ 1.88	-0.03	-2.78	-0.11	-1.42	-0.14	BC 23
			Links	Min N	▷ -2.41	-0.31	5.26	0.09	2.56	-0.17	BC 6
				Max V_y	0.75	▷ 0.12	-2.83	-0.10	-1.52	-0.27	BC 22
				Min V_y	-1.18	▷ -0.70	6.39	0.05	3.21	-0.00	BC 11
				Max V_z	-1.18	-0.70	▷ 6.39	0.05	3.21	-0.00	BC 11
				Min V_z	0.75	0.12	▷ -2.83	-0.10	-1.52	-0.27	BC 22
				Max M_T	-2.41	-0.31	5.26	▷ 0.09	2.56	-0.17	BC 6
				Min M_T	1.88	-0.03	-2.78	▷ -0.11	-1.42	-0.14	BC 23
				Max M_y	-1.18	-0.70	6.39	0.05	▷ 3.21	-0.00	BC 11
				Min M_y	0.75	0.12	-2.83	-0.10	▷ -1.52	-0.27	BC 22
				Max M_z	1.33	-0.28	-2.76	-0.03	-1.36	▷ 0.24	BC 15
				Min M_z	-2.16	-0.22	5.24	0.05	2.53	▷ -0.34	BC 2
		25	3.260	Max N	▷ 1.88	-0.03	-2.78	-0.11	-1.42	-0.14	BC 23
			Rechts	Min N	▷ -2.41	-0.31	5.26	0.09	2.56	-0.17	BC 6
				Max V_y	0.75	▷ 0.12	-2.83	-0.10	-1.52	-0.27	BC 22
				Min V_y	-1.18	▷ -0.70	6.39	0.05	3.21	-0.00	BC 11
				Max V_z	-1.18	-0.70	▷ 6.39	0.05	3.21	-0.00	BC 11
				Min V_z	0.75	0.12	▷ -2.83	-0.10	-1.52	-0.27	BC 22
				Max M_T	-2.41	-0.31	5.26	▷ 0.09	2.56	-0.17	BC 6
				Min M_T	1.88	-0.03	-2.78	▷ -0.11	-1.42	-0.14	BC 23
				Max M_y	-1.18	-0.70	6.39	0.05	▷ 3.21	-0.00	BC 11
				Min M_y	0.75	0.12	-2.83	-0.10	▷ -1.52	-0.27	BC 22
				Max M_z	1.33	-0.28	-2.76	-0.03	-1.36	▷ 0.24	BC 15
				Min M_z	-2.16	-0.22	5.24	0.05	2.53	▷ -0.34	BC 2
22	RC1	212	0.000	Max N	▷ 0.00	0.00	0.00	0.00	0.00	0.00	
			Links	Min N	▷ -5.26	1.71	-4.48	-0.03	0.01	1.74	BC 10
				Max V_y	-4.78	▷ 1.81	-4.48	-0.04	0.01	1.83	BC 9
				Min V_y	0.00	▷ 0.00	0.00	0.00	0.00	0.00	
				Max V_z	-0.39	0.29	▷ 1.94	-0.03	-0.00	0.27	BC 23
				Min V_z	-5.23	1.71	▷ -4.49	-0.02	0.01	1.76	BC 12
				Max M_T	-1.92	0.46	-1.73	▷ 0.03	0.00	0.61	BC 18
				Min M_T	-4.78	1.81	-4.48	▷ -0.04	0.01	1.83	BC 9
				Max M_y	-5.23	1.71	-4.49	-0.02	▷ 0.01	1.76	BC 12
				Min M_y	-1.20	0.23	1.94	-0.02	▷ -0.00	0.29	BC 22
				Max M_z	-5.19	1.77	-4.49	-0.03	0.01	▷ 1.84	BC 8
				Min M_z	-0.52	0.10	1.92	-0.00	0.00	▷ -0.06	BC 15
			0.000	Max N	▷ 0.00	0.00	0.00	0.00	0.00	0.00	
			Rechts	Min N	▷ -5.26	1.71	-4.48	-0.03	0.01	1.74	BC 10
				Max V_y	-4.78	▷ 1.81	-4.48	-0.04	0.01	1.83	BC 9
				Min V_y	0.00	▷ 0.00	0.00	0.00	0.00	0.00	
				Max V_z	-0.39	0.29	▷ 1.94	-0.03	-0.00	0.27	BC 23
				Min V_z	-5.23	1.71	▷ -4.49	-0.02	0.01	1.76	BC 12
				Max M_T	-1.92	0.46	-1.73	▷ 0.03	0.00	0.61	BC 18
				Min M_T	-4.78	1.81	-4.48	▷ -0.04	0.01	1.83	BC 9
				Max M_y	-5.23	1.71	-4.49	-0.02	▷ 0.01	1.76	BC 12
				Min M_y	-1.20	0.23	1.94	-0.02	▷ -0.00	0.29	BC 22
				Max M_z	-5.19	1.77	-4.49	-0.03	0.01	▷ 1.84	BC 8
				Min M_z	-0.52	0.10	1.92	-0.00	0.00	▷ -0.06	BC 15
			0.583	Max N	▷ 0.00	0.00	0.00	0.00	0.00	0.00	
			Links	Min N	▷ -4.82	1.50	-3.30	-0.03	-2.34	0.77	BC 10
				Max V_y	-4.36	▷ 1.59	-3.30	-0.03	-2.34	0.81	BC 9
				Min V_y	0.00	▷ 0.00	0.00	0.00	0.00	0.00	
				Max V_z	-0.34	0.24	▷ 1.48	-0.03	1.04	0.10	BC 23
				Min V_z	-4.79	1.51	▷ -3.32	-0.02	-2.35	0.79	BC 12
				Max M_T	-1.83	0.43	-1.28	▷ 0.03	-0.91	0.34	BC 18
				Min M_T	-4.36	1.59	-3.30	▷ -0.03	-2.34	0.81	BC 9
				Max M_y	-0.34	0.24	1.48	-0.03	▷ 1.04	0.10	BC 23
				Min M_y	-4.79	1.51	-3.32	-0.02	▷ -2.35	0.79	BC 12
				Max M_z	-4.75	1.57	-3.31	-0.03	-2.35	▷ 0.84	BC 8
				Min M_z	-0.47	0.05	1.46	-0.00	1.04	▷ -0.11	BC 15
			0.583	Max N	▷ 0.00	0.00	0.00	0.00	0.00	0.00	
			Rechts	Min N	▷ -4.82	1.50	-3.30	-0.03	-2.34	0.77	BC 10
				Max V_y	-4.36	▷ 1.59	-3.30	-0.03	-2.34	0.81	BC 9
				Min V_y	0.00	▷ 0.00	0.00	0.00	0.00	0.00	
				Max V_z	-0.34	0.24	▷ 1.48	-0.03	1.04	0.10	BC 23
				Min V_z	-4.79	1.51	▷ -3.32	-0.02	-2.35	0.79	BC 12
				Max M_T	-1.83	0.43	-1.28	▷ 0.03	-0.91	0.34	BC 18
				Min M_T	-4.36	1.59	-3.30	▷ -0.03	-2.34	0.81	BC 9
				Max M_y	-0.34	0.24	1.48	-0.03	▷ 1.04	0.10	BC 23
				Min M_y	-4.79	1.51	-3.32	-0.02	▷ -2.35	0.79	BC 12
				Max M_z	-4.75	1.57	-3.31	-0.03	-2.35	▷ 0.84	BC 8
				Min M_z	-0.47	0.05	1.46	-0.00	1.04	▷ -0.11	BC 15
			0.679	Max N	▷ 0.00	0.00	0.00	0.00	0.00	0.00	
			Links	Min N	▷ -4.69	1.43	-2.93	-0.03	-2.64	0.63	BC 10

4.12 DOORSNEDES - SNEDEKRACHTEN

Resultaatcombinaties

Staaf No.	RC	Knoop No.	Snede x [m]		Krachten [kN] N	V_y	V_z	Momenten [kNm] M_T	M_y	M_z	Bijbehorend Belastingsgeval
22	RC1			Max V_y	-4.22	▷ 1.51	-2.93	-0.03	-2.64	0.66	BC 9
				Min V_y	0.00	▷ 0.00	0.00	0.00	0.00	0.00	
				Max V_z	-0.33	0.23	▷ 1.32	-0.03	1.18	0.08	BC 23
				Min V_z	-4.65	1.44	▷ -2.94	-0.02	-2.65	0.64	BC 12
				Max M_T	-1.80	0.42	-1.14	▷ 0.03	-1.02	0.30	BC 18
				Min M_T	-4.22	1.51	-2.93	▷ -0.03	-2.64	0.66	BC 9
				Max M_y	-0.33	0.23	1.32	-0.03	▷ 1.18	0.08	BC 23
				Min M_y	-4.65	1.44	-2.94	-0.02	▷ -2.65	0.64	BC 12
				Max M_z	-4.62	1.50	-2.94	-0.03	-2.65	▷ 0.69	BC 8
				Min M_z	-0.46	0.03	1.30	-0.00	1.17	▷ -0.12	BC 15
			0.679	Max N	▷ 0.00	0.00	0.00	0.00	0.00	0.00	
			Rechts	Min N	▷ -4.69	1.43	-2.93	-0.03	-2.64	0.63	BC 10
				Max V_y	-4.22	▷ 1.51	-2.93	-0.03	-2.64	0.66	BC 9
				Min V_y	0.00	▷ 0.00	0.00	0.00	0.00	0.00	
				Max V_z	-0.33	0.23	▷ 1.32	-0.03	1.18	0.08	BC 23
				Min V_z	-4.65	1.44	▷ -2.94	-0.02	-2.65	0.64	BC 12
				Max M_T	-1.80	0.42	-1.14	▷ 0.03	-1.02	0.30	BC 18
				Min M_T	-4.22	1.51	-2.93	▷ -0.03	-2.64	0.66	BC 9
				Max M_y	-0.33	0.23	1.32	-0.03	▷ 1.18	0.08	BC 23
				Min M_y	-4.65	1.44	-2.94	-0.02	▷ -2.65	0.64	BC 12
				Max M_z	-4.62	1.50	-2.94	-0.03	-2.65	▷ 0.69	BC 8
				Min M_z	-0.46	0.03	1.30	-0.00	1.17	▷ -0.12	BC 15
			0.707	Max N	▷ 0.00	0.00	0.00	0.00	0.00	0.00	
			Links	Min N	▷ -4.64	1.41	-2.81	-0.03	-2.72	0.59	BC 10
				Max V_y	-4.18	▷ 1.49	-2.81	-0.03	-2.72	0.62	BC 9
				Min V_y	0.00	▷ 0.00	0.00	0.00	0.00	0.00	
				Max V_z	-0.33	0.22	▷ 1.26	-0.03	1.21	0.07	BC 23
				Min V_z	-4.61	1.42	▷ -2.83	-0.02	-2.73	0.60	BC 12
				Max M_T	-1.79	0.42	-1.09	▷ 0.03	-1.06	0.29	BC 18
				Min M_T	-4.18	1.49	-2.81	▷ -0.03	-2.72	0.62	BC 9
				Max M_y	-0.33	0.22	1.26	-0.03	▷ 1.21	0.07	BC 23
				Min M_y	-4.61	1.42	-2.83	-0.02	▷ -2.73	0.60	BC 12
				Max M_z	-4.57	1.47	-2.82	-0.03	-2.73	▷ 0.65	BC 8
				Min M_z	-0.46	0.03	1.25	-0.00	1.20	▷ -0.12	BC 15
			0.707	Max N	▷ 0.00	0.00	0.00	0.00	0.00	0.00	
			Rechts	Min N	▷ -4.64	1.41	-2.81	-0.03	-2.72	0.59	BC 10
				Max V_y	-4.18	▷ 1.49	-2.81	-0.03	-2.72	0.62	BC 9
				Min V_y	0.00	▷ 0.00	0.00	0.00	0.00	0.00	
				Max V_z	-0.33	0.22	▷ 1.26	-0.03	1.21	0.07	BC 23
				Min V_z	-4.61	1.42	▷ -2.83	-0.02	-2.73	0.60	BC 12
				Max M_T	-1.79	0.42	-1.09	▷ 0.03	-1.06	0.29	BC 18
				Min M_T	-4.18	1.49	-2.81	▷ -0.03	-2.72	0.62	BC 9
				Max M_y	-0.33	0.22	1.26	-0.03	▷ 1.21	0.07	BC 23
				Min M_y	-4.61	1.42	-2.83	-0.02	▷ -2.73	0.60	BC 12
				Max M_z	-4.57	1.47	-2.82	-0.03	-2.73	▷ 0.65	BC 8
				Min M_z	-0.46	0.03	1.25	-0.00	1.20	▷ -0.12	BC 15
			2.552	Max N	▷ 0.00	0.00	0.00	0.00	0.00	0.00	
			Links	Min N	▷ -1.84	0.08	3.83	0.00	-0.79	-0.53	BC 4
				Max V_y	-1.22	▷ 0.22	1.77	0.03	-0.43	-0.31	BC 18
				Min V_y	-0.18	▷ -0.28	-2.10	-0.00	0.42	0.11	BC 15
				Max V_z	-1.49	-0.14	▷ 4.60	-0.02	-0.95	-0.61	BC 11
				Min V_z	-0.81	-0.13	▷ -2.14	0.01	0.37	0.06	BC 14
				Max M_T	-1.22	0.22	1.77	▷ 0.03	-0.43	-0.31	BC 18
				Min M_T	-0.05	-0.06	-2.08	▷ -0.04	0.46	-0.08	BC 23
				Max M_y	-0.05	-0.06	-2.08	-0.04	▷ 0.46	-0.08	BC 23
				Min M_y	-1.77	-0.04	4.57	-0.01	▷ -1.01	-0.65	BC 12
				Max M_z	-0.18	-0.28	-2.10	-0.00	0.42	▷ 0.11	BC 15
				Min M_z	-1.74	0.00	4.58	-0.02	-1.00	▷ -0.70	BC 8
			2.552	Max N	▷ 0.00	0.00	0.00	0.00	0.00	0.00	
			Rechts	Min N	▷ -1.84	0.08	3.83	0.00	-0.79	-0.53	BC 4
				Max V_y	-1.22	▷ 0.22	1.77	0.03	-0.43	-0.31	BC 18
				Min V_y	-0.18	▷ -0.28	-2.10	-0.00	0.42	0.11	BC 15
				Max V_z	-1.49	-0.14	▷ 4.60	-0.02	-0.94	-0.61	BC 11
				Min V_z	-0.81	-0.13	▷ -2.14	0.01	0.37	0.06	BC 14
				Max M_T	-1.22	0.22	1.77	▷ 0.03	-0.43	-0.31	BC 18
				Min M_T	-0.05	-0.06	-2.08	▷ -0.04	0.46	-0.08	BC 23
				Max M_y	-0.05	-0.06	-2.08	-0.04	▷ 0.46	-0.08	BC 23
				Min M_y	-1.77	-0.04	4.57	-0.01	▷ -1.01	-0.65	BC 12
				Max M_z	-0.18	-0.28	-2.10	-0.00	0.42	▷ 0.11	BC 15
				Min M_z	-1.74	0.00	4.58	-0.02	-1.00	▷ -0.70	BC 8
			2.581	Max N	▷ 0.00	0.00	0.00	0.00	0.00	0.00	
			Links	Min N	▷ -1.81	0.07	3.92	0.00	-0.68	-0.53	BC 4
				Max V_y	-1.22	▷ 0.22	1.81	0.03	-0.38	-0.31	BC 18
				Min V_y	-0.18	▷ -0.28	-2.15	-0.00	0.36	0.12	BC 15
				Max V_z	-1.45	-0.17	▷ 4.71	-0.02	-0.81	-0.60	BC 11
				Min V_z	-0.81	-0.13	▷ -2.19	0.01	0.31	0.06	BC 14
				Max M_T	-1.22	0.22	1.81	▷ 0.03	-0.38	-0.31	BC 18
				Min M_T	-0.05	-0.07	-2.13	▷ -0.04	0.40	-0.07	BC 23
				Max M_y	-0.05	-0.07	-2.13	-0.04	▷ 0.40	-0.07	BC 23
				Min M_y	-1.73	-0.06	4.68	-0.01	▷ -0.88	-0.65	BC 12
				Max M_z	-0.18	-0.28	-2.15	-0.00	0.36	▷ 0.12	BC 15
				Min M_z	-1.69	-0.02	4.68	-0.02	-0.87	▷ -0.70	BC 8
			2.581	Max N	▷ 0.00	0.00	0.00	0.00	0.00	0.00	
			Rechts	Min N	▷ -1.81	0.07	3.92	0.00	-0.68	-0.53	BC 4

4.12 DOORSNEDES - SNEDEKRACHTEN

Resultaatcombinaties

Staaf No.	RC	Knoop No.	Snede x [m]		Krachten [kN] N	V_y	V_z	Momenten [kNm] M_T	M_y	M_z	Bijbehorend Belastingsgeval
22	RC1			Max V_y	-1.22	▷ 0.22	1.81	0.03	-0.38	-0.31	BC 18
				Min V_y	-0.18	▷ -0.28	-2.15	-0.00	0.36	0.12	BC 15
				Max V_z	-1.45	-0.17	▷ 4.71	-0.02	-0.81	-0.60	BC 11
				Min V_z	-0.81	-0.13	▷ -2.19	0.01	0.31	0.06	BC 14
				Max M_T	-1.22	0.22	1.81	▷ 0.03	-0.38	-0.31	BC 18
				Min M_T	-0.05	-0.07	-2.13	▷ -0.04	0.40	-0.07	BC 23
				Max M_y	-0.05	-0.07	-2.13	-0.04	▷ 0.40	-0.07	BC 23
				Min M_y	-1.73	-0.06	4.68	-0.01	▷ -0.88	-0.65	BC 12
				Max M_z	-0.18	-0.28	-2.15	-0.00	0.36	▷ 0.12	BC 15
				Min M_z	-1.69	-0.02	4.68	-0.02	-0.87	▷ -0.70	BC 8
			2.677	Max N	▷ 0.00	0.00	0.00	0.00	0.00	0.00	
			Links	Min N	▷ -1.71	0.02	4.21	0.00	-0.29	-0.54	BC 4
				Max V_y	-1.19	▷ 0.21	1.95	0.03	-0.20	-0.33	BC 18
				Min V_y	-0.16	▷ -0.30	-2.31	-0.00	0.14	0.15	BC 15
				Max V_z	-1.32	-0.24	▷ 5.06	-0.02	-0.34	-0.58	BC 11
				Min V_z	-0.78	-0.13	▷ -2.35	0.01	0.09	0.07	BC 14
				Max M_T	-1.19	0.21	1.95	▷ 0.03	-0.20	-0.33	BC 18
				Min M_T	-0.04	-0.08	-2.30	▷ -0.04	0.18	-0.07	BC 23
				Max M_y	-0.04	-0.08	-2.30	-0.04	▷ 0.18	-0.07	BC 23
				Min M_y	-1.59	-0.13	5.03	-0.01	▷ -0.41	-0.64	BC 12
				Max M_z	-0.16	-0.30	-2.31	-0.00	0.14	▷ 0.15	BC 15
				Min M_z	-1.56	-0.09	5.03	-0.02	-0.40	▷ -0.69	BC 8
			2.677	Max N	▷ 0.00	0.00	0.00	0.00	0.00	0.00	
			Rechts	Min N	▷ -1.71	0.02	4.21	0.00	-0.29	-0.54	BC 4
				Max V_y	-1.19	▷ 0.21	1.95	0.03	-0.20	-0.33	BC 18
				Min V_y	-0.16	▷ -0.30	-2.31	-0.00	0.14	0.15	BC 15
				Max V_z	-1.32	-0.24	▷ 5.06	-0.02	-0.34	-0.58	BC 11
				Min V_z	-0.78	-0.13	▷ -2.35	0.01	0.09	0.07	BC 14
				Max M_T	-1.19	0.21	1.95	▷ 0.03	-0.20	-0.33	BC 18
				Min M_T	-0.04	-0.08	-2.30	▷ -0.04	0.18	-0.07	BC 23
				Max M_y	-0.04	-0.08	-2.30	-0.04	▷ 0.18	-0.07	BC 23
				Min M_y	-1.59	-0.13	5.03	-0.01	▷ -0.41	-0.64	BC 12
				Max M_z	-0.16	-0.30	-2.31	-0.00	0.14	▷ 0.15	BC 15
				Min M_z	-1.56	-0.09	5.03	-0.02	-0.40	▷ -0.69	BC 8
			3.260	Max N	▷ 0.01	-0.13	-2.76	-0.04	-1.34	0.01	BC 23
			Links	Min N	▷ -1.46	-0.10	5.03	0.00	2.48	-0.49	BC 4
				Max V_y	-1.09	▷ 0.17	2.40	0.03	1.11	-0.44	BC 18
				Min V_y	-0.98	▷ -0.43	5.99	-0.02	2.97	-0.35	BC 11
				Max V_z	-0.98	-0.43	▷ 5.99	-0.02	2.97	-0.35	BC 11
				Min V_z	-0.71	-0.16	▷ -2.81	0.01	-1.46	0.16	BC 14
				Max M_T	-1.09	0.17	2.40	▷ 0.03	1.11	-0.44	BC 18
				Min M_T	0.01	-0.13	-2.76	▷ -0.04	-1.34	0.01	BC 23
				Max M_y	-0.98	-0.43	5.99	-0.02	▷ 2.97	-0.35	BC 11
				Min M_y	-0.71	-0.16	-2.81	0.01	▷ -1.46	0.16	BC 14
				Max M_z	-0.12	-0.35	-2.77	-0.00	-1.39	▷ 0.35	BC 15
				Min M_z	-1.32	0.03	5.01	-0.00	2.41	▷ -0.71	BC 2
		26	3.260	Max N	▷ 0.01	-0.13	-2.76	-0.04	-1.34	0.01	BC 23
			Rechts	Min N	▷ -1.46	-0.10	5.03	0.00	2.48	-0.49	BC 4
				Max V_y	-1.09	▷ 0.17	2.40	0.03	1.11	-0.44	BC 18
				Min V_y	-0.98	▷ -0.43	5.99	-0.02	2.97	-0.35	BC 11
				Max V_z	-0.98	-0.43	▷ 5.99	-0.02	2.97	-0.35	BC 11
				Min V_z	-0.71	-0.16	▷ -2.81	0.01	-1.46	0.16	BC 14
				Max M_T	-1.09	0.17	2.40	▷ 0.03	1.11	-0.44	BC 18
				Min M_T	0.01	-0.13	-2.76	▷ -0.04	-1.34	0.01	BC 23
				Max M_y	-0.98	-0.43	5.99	-0.02	▷ 2.97	-0.35	BC 11
				Min M_y	-0.71	-0.16	-2.81	0.01	▷ -1.46	0.16	BC 14
				Max M_z	-0.12	-0.35	-2.77	-0.00	-1.39	▷ 0.35	BC 15
				Min M_z	-1.32	0.03	5.01	-0.00	2.41	▷ -0.71	BC 2
23	RC1	214	0.000	Max N	▷ 2.69	0.05	1.83	0.03	0.00	-0.13	BC 15
			Links	Min N	▷ -17.36	1.74	-4.14	-0.13	0.01	1.98	BC 8
				Max V_y	-17.06	▷ 1.78	-4.14	-0.14	0.01	1.98	BC 9
				Min V_y	2.06	▷ -0.03	1.83	0.04	0.00	-0.14	BC 14
				Max V_z	0.26	0.13	▷ 1.85	0.05	-0.00	0.14	BC 22
				Min V_z	-16.91	1.69	▷ -4.15	-0.13	0.02	1.91	BC 12
				Max M_T	0.26	0.13	1.85	▷ 0.05	-0.00	0.14	BC 22
				Min M_T	-16.61	1.74	-4.14	▷ -0.14	0.02	1.92	BC 13
				Max M_y	-16.91	1.69	-4.15	-0.13	▷ 0.02	1.91	BC 12
				Min M_y	0.92	0.21	1.85	0.04	▷ -0.00	0.15	BC 23
				Max M_z	-17.06	1.78	-4.14	-0.14	0.01	▷ 1.98	BC 9
				Min M_z	2.06	-0.03	1.83	0.04	0.00	▷ -0.14	BC 14
			0.000	Max N	▷ 2.69	0.05	1.83	0.03	0.00	-0.13	BC 15
			Rechts	Min N	▷ -17.36	1.74	-4.14	-0.13	0.01	1.98	BC 8
				Max V_y	-17.06	▷ 1.78	-4.14	-0.14	0.01	1.98	BC 9
				Min V_y	2.06	▷ -0.03	1.83	0.04	0.00	-0.14	BC 14
				Max V_z	0.26	0.13	▷ 1.85	0.05	-0.00	0.14	BC 22
				Min V_z	-16.91	1.69	▷ -4.15	-0.13	0.02	1.91	BC 12
				Max M_T	0.26	0.13	1.85	▷ 0.05	-0.00	0.14	BC 22
				Min M_T	-16.61	1.74	-4.14	▷ -0.14	0.02	1.92	BC 13
				Max M_y	-16.91	1.69	-4.15	-0.13	▷ 0.02	1.91	BC 12
				Min M_y	0.92	0.21	1.85	0.04	▷ -0.00	0.15	BC 23
				Max M_z	-17.06	1.78	-4.14	-0.14	0.01	▷ 1.98	BC 9
				Min M_z	2.06	-0.03	1.83	0.04	0.00	▷ -0.14	BC 14
			0.583	Max N	▷ 2.74	0.00	1.37	0.03	0.98	-0.15	BC 15
			Links	Min N	▷ -16.95	1.62	-3.01	-0.13	-2.16	0.97	BC 8

4.12 DOORSNEDES - SNEDEKRACHTEN

Resultaatcombinaties

Staaf No.	RC	Knoop No.	Snede x [m]		Krachten [kN] N	V_y	V_z	Momenten [kNm] M_T	M_y	M_z	Bijbehorend Belastingsgeval
23	RC1			Max V_y	-16.65	▷ 1.66	-3.01	-0.13	-2.15	0.95	BC 9
				Min V_y	2.13	▷ -0.05	1.37	0.04	0.98	-0.12	BC 14
				Max V_z	0.96	0.17	▷ 1.39	0.04	0.99	0.02	BC 23
				Min V_z	-16.50	1.58	▷ -3.02	-0.13	-2.15	0.92	BC 12
				Max M_T	0.33	0.12	1.39	▷ 0.05	0.99	0.06	BC 22
				Min M_T	-16.21	1.61	-3.01	▷ -0.14	-2.15	0.90	BC 13
				Max M_y	0.33	0.12	1.39	0.05	▷ 0.99	0.06	BC 22
				Min M_y	-16.95	1.62	-3.01	-0.13	▷ -2.16	0.97	BC 8
				Max M_z	-16.95	1.62	-3.01	-0.13	-2.16	▷ 0.97	BC 8
				Min M_z	2.74	0.00	1.37	0.03	0.98	▷ -0.15	BC 15
			0.583	Max N	▷ 2.74	0.00	1.37	0.03	0.98	-0.15	BC 15
			Rechts	Min N	▷ -16.95	1.62	-3.01	-0.13	-2.16	0.97	BC 8
				Max V_y	-16.65	▷ 1.66	-3.01	-0.13	-2.15	0.95	BC 9
				Min V_y	2.13	▷ -0.05	1.37	0.04	0.98	-0.12	BC 14
				Max V_z	0.96	0.17	▷ 1.39	0.04	0.99	0.02	BC 23
				Min V_z	-16.50	1.58	▷ -3.02	-0.13	-2.15	0.92	BC 12
				Max M_T	0.33	0.12	1.39	▷ 0.05	0.99	0.06	BC 22
				Min M_T	-16.21	1.61	-3.01	▷ -0.14	-2.15	0.90	BC 13
				Max M_y	0.33	0.12	1.39	0.05	▷ 0.99	0.06	BC 22
				Min M_y	-16.95	1.62	-3.01	-0.13	▷ -2.16	0.97	BC 8
				Max M_z	-16.95	1.62	-3.01	-0.13	-2.16	▷ 0.97	BC 8
				Min M_z	2.74	0.00	1.37	0.03	0.98	▷ -0.15	BC 15
			0.679	Max N	▷ 2.75	-0.01	1.21	0.03	1.11	-0.15	BC 15
			Links	Min N	▷ -16.82	1.57	-2.65	-0.13	-2.43	0.81	BC 8
				Max V_y	-16.53	▷ 1.59	-2.65	-0.13	-2.43	0.79	BC 9
				Min V_y	2.15	▷ -0.06	1.21	0.04	1.11	-0.11	BC 14
				Max V_z	0.97	0.15	▷ 1.22	0.04	1.11	0.00	BC 23
				Min V_z	-16.37	1.52	▷ -2.66	-0.13	-2.42	0.77	BC 12
				Max M_T	0.35	0.11	1.22	▷ 0.05	1.12	0.05	BC 22
				Min M_T	-16.08	1.54	-2.65	▷ -0.14	-2.42	0.75	BC 13
				Max M_y	0.35	0.11	1.22	0.05	▷ 1.12	0.05	BC 22
				Min M_y	-16.82	1.57	-2.65	-0.13	▷ -2.43	0.81	BC 8
				Max M_z	-16.82	1.57	-2.65	-0.13	-2.43	▷ 0.81	BC 8
				Min M_z	2.75	-0.01	1.21	0.03	1.11	▷ -0.15	BC 15
			0.679	Max N	▷ 2.75	-0.01	1.21	0.03	1.11	-0.15	BC 15
			Rechts	Min N	▷ -16.82	1.57	-2.65	-0.13	-2.43	0.81	BC 8
				Max V_y	-16.53	▷ 1.59	-2.65	-0.13	-2.43	0.79	BC 9
				Min V_y	2.15	▷ -0.06	1.21	0.04	1.11	-0.11	BC 14
				Max V_z	0.97	0.15	▷ 1.22	0.04	1.11	0.00	BC 23
				Min V_z	-16.37	1.52	▷ -2.66	-0.13	-2.42	0.77	BC 12
				Max M_T	0.35	0.11	1.22	▷ 0.05	1.12	0.05	BC 22
				Min M_T	-16.08	1.54	-2.65	▷ -0.14	-2.42	0.75	BC 13
				Max M_y	0.35	0.11	1.22	0.05	▷ 1.12	0.05	BC 22
				Min M_y	-16.82	1.57	-2.65	-0.13	▷ -2.43	0.81	BC 8
				Max M_z	-16.82	1.57	-2.65	-0.13	-2.43	▷ 0.81	BC 8
				Min M_z	2.75	-0.01	1.21	0.03	1.11	▷ -0.15	BC 15
			0.707	Max N	▷ 2.75	-0.02	1.16	0.03	1.14	-0.15	BC 15
			Links	Min N	▷ -16.78	1.55	-2.54	-0.13	-2.50	0.77	BC 8
				Max V_y	-16.49	▷ 1.57	-2.54	-0.13	-2.50	0.74	BC 9
				Min V_y	2.15	▷ -0.06	1.16	0.04	1.14	-0.11	BC 14
				Max V_z	0.98	0.15	▷ 1.17	0.04	1.15	0.00	BC 23
				Min V_z	-16.33	1.50	▷ -2.54	-0.13	-2.50	0.72	BC 12
				Max M_T	0.35	0.11	1.17	▷ 0.05	1.15	0.04	BC 22
				Min M_T	-16.04	1.52	-2.54	▷ -0.14	-2.50	0.70	BC 13
				Max M_y	0.35	0.11	1.17	0.05	▷ 1.15	0.04	BC 22
				Min M_y	-16.78	1.55	-2.54	-0.13	▷ -2.50	0.77	BC 8
				Max M_z	-16.78	1.55	-2.54	-0.13	-2.50	▷ 0.77	BC 8
				Min M_z	2.75	-0.02	1.16	0.03	1.14	▷ -0.15	BC 15
			0.707	Max N	▷ 2.75	-0.02	1.16	0.03	1.14	-0.15	BC 15
			Rechts	Min N	▷ -16.78	1.55	-2.54	-0.13	-2.50	0.77	BC 8
				Max V_y	-16.49	▷ 1.57	-2.54	-0.13	-2.50	0.74	BC 9
				Min V_y	2.15	▷ -0.06	1.16	0.04	1.14	-0.11	BC 14
				Max V_z	0.98	0.15	▷ 1.17	0.04	1.15	0.00	BC 23
				Min V_z	-16.33	1.50	▷ -2.54	-0.13	-2.50	0.72	BC 12
				Max M_T	0.35	0.11	1.17	▷ 0.05	1.15	0.04	BC 22
				Min M_T	-16.04	1.52	-2.54	▷ -0.14	-2.50	0.70	BC 13
				Max M_y	0.35	0.11	1.17	0.05	▷ 1.15	0.04	BC 22
				Min M_y	-16.78	1.55	-2.54	-0.13	▷ -2.50	0.77	BC 8
				Max M_z	-16.78	1.55	-2.54	-0.13	-2.50	▷ 0.77	BC 8
				Min M_z	2.75	-0.02	1.16	0.03	1.14	▷ -0.15	BC 15
			2.552	Max N	▷ 3.03	-0.32	-2.16	0.03	0.22	0.16	BC 15
			Links	Min N	▷ -14.13	0.14	4.57	-0.12	-0.50	-0.83	BC 8
				Max V_y	-12.52	▷ 0.31	3.87	-0.09	-0.43	-0.76	BC 2
				Min V_y	3.03	▷ -0.32	-2.16	0.03	0.22	0.16	BC 15
				Max V_z	-13.56	0.01	▷ 4.59	-0.12	-0.47	-0.74	BC 11
				Min V_z	0.78	-0.01	▷ -2.20	0.05	0.20	-0.05	BC 22
				Max M_T	0.78	-0.01	-2.20	▷ 0.05	0.20	-0.05	BC 22
				Min M_T	-13.47	0.04	4.58	▷ -0.13	-0.49	-0.77	BC 13
				Max M_y	1.25	-0.14	-2.16	0.03	▷ 0.23	-0.01	BC 23
				Min M_y	-13.68	0.11	4.57	-0.12	▷ -0.50	-0.79	BC 12
				Max M_z	3.03	-0.32	-2.16	0.03	0.22	▷ 0.16	BC 15
				Min M_z	-14.13	0.14	4.57	-0.12	-0.50	▷ -0.83	BC 8
			2.552	Max N	▷ 3.03	-0.32	-2.16	0.03	0.22	0.16	BC 15
			Rechts	Min N	▷ -14.13	0.14	4.57	-0.12	-0.50	-0.83	BC 8

4.12 DOORSNEDES - SNEDEKRACHTEN

Resultaatcombinaties

Staaf No.	RC	Knoop No.	Snede x [m]		Krachten [kN] N	V_y	V_z	Momenten [kNm] M_T	M_y	M_z	Bijbehorend Belastingsgeval
23	RC1			Max V_y	-12.52	▷ 0.31	3.87	-0.09	-0.43	-0.76	BC 2
				Min V_y	3.03	▷ -0.32	-2.16	0.03	0.22	0.16	BC 15
				Max V_z	-13.56	0.01	▷ 4.59	-0.12	-0.47	-0.74	BC 11
				Min V_z	0.78	-0.01	▷ -2.20	0.05	0.20	-0.05	BC 22
				Max M_T	0.78	-0.01	-2.20	▷ 0.05	0.20	-0.05	BC 22
				Min M_T	-13.47	0.04	4.58	▷ -0.13	-0.49	-0.77	BC 13
				Max M_y	1.25	-0.14	-2.16	0.03	▷ 0.23	-0.01	BC 23
				Min M_y	-13.68	0.11	4.57	-0.12	▷ -0.50	-0.79	BC 12
				Max M_z	3.03	-0.32	-2.16	0.03	0.22	▷ 0.16	BC 15
				Min M_z	-14.13	0.14	4.57	-0.12	-0.50	▷ -0.83	BC 8
			2.581	Max N	▷ 3.03	-0.33	-2.21	0.03	0.15	0.17	BC 15
			Links	Min N	▷ -14.09	0.12	4.68	-0.12	-0.37	-0.83	BC 8
				Max V_y	-12.49	▷ 0.30	3.96	-0.09	-0.32	-0.77	BC 2
				Min V_y	3.03	▷ -0.33	-2.21	0.03	0.15	0.17	BC 15
				Max V_z	-13.52	-0.02	▷ 4.69	-0.12	-0.34	-0.74	BC 11
				Min V_z	0.79	-0.01	▷ -2.25	0.05	0.14	-0.05	BC 22
				Max M_T	0.79	-0.01	-2.25	▷ 0.05	0.14	-0.05	BC 22
				Min M_T	-13.43	0.01	4.68	▷ -0.13	-0.36	-0.77	BC 13
				Max M_y	1.25	-0.14	-2.22	0.03	▷ 0.17	-0.00	BC 23
				Min M_y	-13.64	0.09	4.67	-0.12	▷ -0.37	-0.80	BC 12
				Max M_z	3.03	-0.33	-2.21	0.03	0.15	▷ 0.17	BC 15
				Min M_z	-14.09	0.12	4.68	-0.12	-0.37	▷ -0.83	BC 8
			2.581	Max N	▷ 3.03	-0.33	-2.21	0.03	0.15	0.17	BC 15
			Rechts	Min N	▷ -14.09	0.12	4.68	-0.12	-0.37	-0.83	BC 8
				Max V_y	-12.49	▷ 0.30	3.96	-0.09	-0.32	-0.77	BC 2
				Min V_y	3.03	▷ -0.33	-2.21	0.03	0.15	0.17	BC 15
				Max V_z	-13.52	-0.02	▷ 4.69	-0.12	-0.34	-0.74	BC 11
				Min V_z	0.79	-0.01	▷ -2.25	0.05	0.14	-0.05	BC 22
				Max M_T	0.79	-0.01	-2.25	▷ 0.05	0.14	-0.05	BC 22
				Min M_T	-13.43	0.01	4.68	▷ -0.13	-0.36	-0.77	BC 13
				Max M_y	1.25	-0.14	-2.22	0.03	▷ 0.17	-0.00	BC 23
				Min M_y	-13.64	0.09	4.67	-0.12	▷ -0.37	-0.80	BC 12
				Max M_z	3.03	-0.33	-2.21	0.03	0.15	▷ 0.17	BC 15
				Min M_z	-14.09	0.12	4.68	-0.12	-0.37	▷ -0.83	BC 8
			2.677	Max N	▷ 3.05	-0.34	-2.38	0.03	-0.07	0.20	BC 15
			Links	Min N	▷ -13.97	0.05	5.00	-0.12	0.10	-0.84	BC 8
				Max V_y	-6.39	▷ 0.26	2.05	-0.04	0.02	-0.40	BC 18
				Min V_y	3.05	▷ -0.34	-2.38	0.03	-0.07	0.20	BC 15
				Max V_z	-13.40	-0.09	▷ 5.02	-0.12	0.13	-0.74	BC 11
				Min V_z	0.81	-0.01	▷ -2.41	0.05	-0.09	-0.05	BC 22
				Max M_T	0.81	-0.01	-2.41	▷ 0.05	-0.09	-0.05	BC 22
				Min M_T	-13.31	-0.06	5.01	▷ -0.13	0.11	-0.77	BC 13
				Max M_y	-11.27	-0.03	4.27	-0.09	▷ 0.15	-0.59	BC 5
				Min M_y	2.61	-0.20	-2.41	0.04	▷ -0.10	0.14	BC 14
				Max M_z	3.05	-0.34	-2.38	0.03	-0.07	▷ 0.20	BC 15
				Min M_z	-13.97	0.05	5.00	-0.12	0.10	▷ -0.84	BC 8
			2.677	Max N	▷ 3.05	-0.34	-2.38	0.03	-0.07	0.20	BC 15
			Rechts	Min N	▷ -13.97	0.05	5.00	-0.12	0.10	-0.84	BC 8
				Max V_y	-6.39	▷ 0.26	2.05	-0.04	0.02	-0.40	BC 18
				Min V_y	3.05	▷ -0.34	-2.38	0.03	-0.07	0.20	BC 15
				Max V_z	-13.40	-0.09	▷ 5.02	-0.12	0.13	-0.74	BC 11
				Min V_z	0.81	-0.01	▷ -2.41	0.05	-0.09	-0.05	BC 22
				Max M_T	0.81	-0.01	-2.41	▷ 0.05	-0.09	-0.05	BC 22
				Min M_T	-13.31	-0.06	5.01	▷ -0.13	0.11	-0.77	BC 13
				Max M_y	-11.27	-0.03	4.27	-0.09	▷ 0.15	-0.59	BC 5
				Min M_y	2.61	-0.20	-2.41	0.04	▷ -0.10	0.14	BC 14
				Max M_z	3.05	-0.34	-2.38	0.03	-0.07	▷ 0.20	BC 15
				Min M_z	-13.97	0.05	5.00	-0.12	0.10	▷ -0.84	BC 8
			3.260	Max N	▷ 3.10	-0.40	-2.84	0.03	-1.64	0.42	BC 15
			Links	Min N	▷ -13.64	-0.16	5.84	-0.12	3.35	-0.78	BC 8
				Max V_y	-6.29	▷ 0.22	2.49	-0.04	1.38	-0.53	BC 18
				Min V_y	3.10	▷ -0.40	-2.84	0.03	-1.64	0.42	BC 15
				Max V_z	-13.09	-0.30	▷ 5.86	-0.12	3.39	-0.60	BC 11
				Min V_z	2.68	-0.23	▷ -2.88	0.04	-1.69	0.27	BC 14
				Max M_T	0.88	-0.03	-2.88	▷ 0.05	-1.68	-0.03	BC 22
				Min M_T	-13.00	-0.27	5.85	▷ -0.13	3.36	-0.64	BC 13
				Max M_y	-13.09	-0.30	5.86	-0.12	▷ 3.39	-0.60	BC 11
				Min M_y	2.68	-0.23	-2.88	0.04	▷ -1.69	0.27	BC 14
				Max M_z	3.10	-0.40	-2.84	0.03	-1.64	▷ 0.42	BC 15
				Min M_z	-12.17	0.10	4.99	-0.09	2.84	▷ -0.88	BC 2
		27	3.260	Max N	▷ 3.10	-0.40	-2.84	0.03	-1.64	0.42	BC 15
			Rechts	Min N	▷ -13.64	-0.16	5.84	-0.12	3.35	-0.78	BC 8
				Max V_y	-6.29	▷ 0.22	2.49	-0.04	1.38	-0.53	BC 18
				Min V_y	3.10	▷ -0.40	-2.84	0.03	-1.64	0.42	BC 15
				Max V_z	-13.09	-0.30	▷ 5.86	-0.12	3.39	-0.60	BC 11
				Min V_z	2.68	-0.23	▷ -2.88	0.04	-1.69	0.27	BC 14
				Max M_T	0.88	-0.03	-2.88	▷ 0.05	-1.68	-0.03	BC 22
				Min M_T	-13.00	-0.27	5.85	▷ -0.13	3.36	-0.64	BC 13
				Max M_y	-13.09	-0.30	5.86	-0.12	▷ 3.39	-0.60	BC 11
				Min M_y	2.68	-0.23	-2.88	0.04	▷ -1.69	0.27	BC 14
				Max M_z	3.10	-0.40	-2.84	0.03	-1.64	▷ 0.42	BC 15
				Min M_z	-12.17	0.10	4.99	-0.09	2.84	▷ -0.88	BC 2
24	RC1	191	0.000	Max N	▷ 3.45	-0.22	1.77	0.02	0.00	-0.34	BC 15
			Links	Min N	▷ -15.16	1.46	-3.54	-0.10	0.01	1.45	BC 10

4.12 DOORSNEDES - SNEDEKRACHTEN

Resultaatcombinaties

Staaf No.	RC	Knoop No.	Snede x [m]		Krachten [kN] N	V_y	V_z	Momenten [kNm] M_T	M_y	M_z	Bijbehorend Belastingsgeval
24	RC1			Max V_y	-15.16	▷ 1.46	-3.54	-0.10	0.01	1.45	BC 10
				Min V_y	3.45	▷ -0.22	1.77	0.02	0.00	-0.34	BC 15
				Max V_z	-2.19	0.25	▷ 1.79	-0.02	0.00	0.28	BC 20
				Min V_z	-14.95	1.38	▷ -4.10	-0.10	0.01	1.40	BC 9
				Max M_T	3.13	-0.16	1.77	▷ 0.03	0.00	-0.36	BC 14
				Min M_T	-15.00	1.42	-3.54	▷ -0.11	0.01	1.46	BC 11
				Max M_y	-14.95	1.38	-4.10	-0.10	▷ 0.01	1.40	BC 9
				Min M_y	-0.59	-0.02	-0.41	-0.02	▷ -0.00	-0.16	BC 22
				Max M_z	-15.00	1.42	-3.54	-0.11	0.01	▷ 1.46	BC 11
				Min M_z	3.13	-0.16	1.77	0.03	0.00	▷ -0.36	BC 14
			0.000	Max N	▷ 3.45	-0.22	1.77	0.02	0.00	-0.34	BC 15
			Rechts	Min N	▷ -15.16	1.46	-3.54	-0.10	0.01	1.45	BC 10
				Max V_y	-15.16	▷ 1.46	-3.54	-0.10	0.01	1.45	BC 10
				Min V_y	3.45	▷ -0.22	1.77	0.02	0.00	-0.34	BC 15
				Max V_z	-2.19	0.25	▷ 1.79	-0.02	0.00	0.28	BC 20
				Min V_z	-14.95	1.38	▷ -4.10	-0.10	0.01	1.40	BC 9
				Max M_T	3.13	-0.16	1.77	▷ 0.03	0.00	-0.36	BC 14
				Min M_T	-15.00	1.42	-3.54	▷ -0.11	0.01	1.46	BC 11
				Max M_y	-14.95	1.38	-4.10	-0.10	▷ 0.01	1.40	BC 9
				Min M_y	-0.59	-0.02	-0.41	-0.02	▷ -0.00	-0.16	BC 22
				Max M_z	-15.00	1.42	-3.54	-0.11	0.01	▷ 1.46	BC 11
				Min M_z	3.13	-0.16	1.77	0.03	0.00	▷ -0.36	BC 14
			0.583	Max N	▷ 3.50	-0.22	1.32	0.02	0.95	-0.21	BC 15
			Links	Min N	▷ -14.77	1.30	-2.56	-0.10	-1.84	0.61	BC 10
				Max V_y	-14.77	▷ 1.30	-2.56	-0.10	-1.84	0.61	BC 10
				Min V_y	3.50	▷ -0.22	1.32	0.02	0.95	-0.21	BC 15
				Max V_z	-2.16	0.22	▷ 1.35	-0.02	0.96	0.14	BC 20
				Min V_z	-14.55	1.24	▷ -2.97	-0.10	-2.13	0.60	BC 9
				Max M_T	3.15	-0.18	1.33	▷ 0.03	0.95	-0.27	BC 14
				Min M_T	-14.59	1.28	-2.56	▷ -0.11	-1.84	0.64	BC 11
				Max M_y	-2.16	0.22	1.35	-0.02	▷ 0.96	0.14	BC 20
				Min M_y	-14.55	1.24	-2.97	-0.10	▷ -2.13	0.60	BC 9
				Max M_z	-14.59	1.28	-2.56	-0.11	-1.84	▷ 0.64	BC 11
				Min M_z	3.15	-0.18	1.33	0.03	0.95	▷ -0.27	BC 14
			0.583	Max N	▷ 3.50	-0.22	1.32	0.02	0.95	-0.21	BC 15
			Rechts	Min N	▷ -14.77	1.30	-2.56	-0.10	-1.84	0.61	BC 10
				Max V_y	-14.77	▷ 1.30	-2.56	-0.10	-1.84	0.61	BC 10
				Min V_y	3.50	▷ -0.22	1.32	0.02	0.95	-0.21	BC 15
				Max V_z	-2.16	0.22	▷ 1.35	-0.02	0.96	0.14	BC 20
				Min V_z	-14.55	1.24	▷ -2.97	-0.10	-2.13	0.60	BC 9
				Max M_T	3.15	-0.18	1.33	▷ 0.03	0.95	-0.27	BC 14
				Min M_T	-14.59	1.28	-2.56	▷ -0.11	-1.84	0.64	BC 11
				Max M_y	-2.16	0.22	1.35	-0.02	▷ 0.96	0.14	BC 20
				Min M_y	-14.55	1.24	-2.97	-0.10	▷ -2.13	0.60	BC 9
				Max M_z	-14.59	1.28	-2.56	-0.11	-1.84	▷ 0.64	BC 11
				Min M_z	3.15	-0.18	1.33	0.03	0.95	▷ -0.27	BC 14
			0.679	Max N	▷ 3.51	-0.21	1.16	0.02	1.07	-0.19	BC 15
			Links	Min N	▷ -14.65	1.24	-2.24	-0.10	-2.07	0.49	BC 10
				Max V_y	-14.65	▷ 1.24	-2.24	-0.10	-2.07	0.49	BC 10
				Min V_y	3.51	▷ -0.21	1.16	0.02	1.07	-0.19	BC 15
				Max V_z	-2.16	0.22	▷ 1.19	-0.02	1.08	0.12	BC 20
				Min V_z	-14.43	1.18	▷ -2.61	-0.10	-2.40	0.48	BC 9
				Max M_T	3.16	-0.19	1.18	▷ 0.03	1.07	-0.25	BC 14
				Min M_T	-14.46	1.22	-2.25	▷ -0.10	-2.07	0.52	BC 11
				Max M_y	-2.16	0.22	1.19	-0.02	▷ 1.08	0.12	BC 20
				Min M_y	-14.43	1.18	-2.61	-0.10	▷ -2.40	0.48	BC 9
				Max M_z	-14.46	1.22	-2.25	-0.10	-2.07	▷ 0.52	BC 11
				Min M_z	3.16	-0.19	1.18	0.03	1.07	▷ -0.25	BC 14
			0.679	Max N	▷ 3.51	-0.21	1.16	0.02	1.07	-0.19	BC 15
			Rechts	Min N	▷ -14.65	1.24	-2.24	-0.10	-2.07	0.49	BC 10
				Max V_y	-14.65	▷ 1.24	-2.24	-0.10	-2.07	0.49	BC 10
				Min V_y	3.51	▷ -0.21	1.16	0.02	1.07	-0.19	BC 15
				Max V_z	-2.16	0.22	▷ 1.19	-0.02	1.08	0.12	BC 20
				Min V_z	-14.43	1.18	▷ -2.61	-0.10	-2.40	0.48	BC 9
				Max M_T	3.16	-0.19	1.18	▷ 0.03	1.07	-0.25	BC 14
				Min M_T	-14.46	1.22	-2.25	▷ -0.10	-2.07	0.52	BC 11
				Max M_y	-2.16	0.22	1.19	-0.02	▷ 1.08	0.12	BC 20
				Min M_y	-14.43	1.18	-2.61	-0.10	▷ -2.40	0.48	BC 9
				Max M_z	-14.46	1.22	-2.25	-0.10	-2.07	▷ 0.52	BC 11
				Min M_z	3.16	-0.19	1.18	0.03	1.07	▷ -0.25	BC 14
			0.707	Max N	▷ 3.51	-0.21	1.12	0.02	1.10	-0.18	BC 15
			Links	Min N	▷ -14.61	1.22	-2.14	-0.10	-2.13	0.45	BC 10
				Max V_y	-14.61	▷ 1.22	-2.14	-0.10	-2.13	0.45	BC 10
				Min V_y	3.51	▷ -0.21	1.12	0.02	1.10	-0.18	BC 15
				Max V_z	-2.15	0.21	▷ 1.14	-0.02	1.12	0.12	BC 20
				Min V_z	-14.39	1.16	▷ -2.50	-0.10	-2.47	0.44	BC 9
				Max M_T	3.16	-0.19	1.13	▷ 0.03	1.11	-0.24	BC 14
				Min M_T	-14.42	1.20	-2.15	▷ -0.10	-2.13	0.48	BC 11
				Max M_y	-2.15	0.21	1.14	-0.02	▷ 1.12	0.12	BC 20
				Min M_y	-14.39	1.16	-2.50	-0.10	▷ -2.47	0.44	BC 9
				Max M_z	-14.42	1.20	-2.15	-0.10	-2.13	▷ 0.48	BC 11
				Min M_z	3.16	-0.19	1.13	0.03	1.11	▷ -0.24	BC 14
			0.707	Max N	▷ 3.51	-0.21	1.12	0.02	1.10	-0.18	BC 15
			Rechts	Min N	▷ -14.61	1.22	-2.14	-0.10	-2.13	0.45	BC 10

4.12 DOORSNEDES - SNEDEKRACHTEN

Resultaatcombinaties

Staaf No.	RC	Knoop No.	Snede x [m]		Krachten [kN] N	V_y	V_z	Momenten [kNm] M_T	M_y	M_z	Bijbehorend Belastingsgeval
24	RC1			Max V_y	-14.61	▷ 1.22	-2.14	-0.10	-2.13	0.45	BC 10
				Min V_y	3.51	▷ -0.21	1.12	0.02	1.10	-0.18	BC 15
				Max V_z	-2.15	0.21	▷ 1.14	-0.02	1.12	0.12	BC 20
				Min V_z	-14.39	1.16	▷ -2.50	-0.10	-2.47	0.44	BC 9
				Max M_T	3.16	-0.19	1.13	▷ 0.03	1.11	-0.24	BC 14
				Min M_T	-14.42	1.20	-2.15	▷ -0.10	-2.13	0.48	BC 11
				Max M_y	-2.15	0.21	1.14	-0.02	▷ 1.12	0.12	BC 20
				Min M_y	-14.39	1.16	-2.50	-0.10	▷ -2.47	0.44	BC 9
				Max M_z	-14.42	1.20	-2.15	-0.10	-2.13	▷ 0.48	BC 11
				Min M_z	3.16	-0.19	1.13	0.03	1.11	▷ -0.24	BC 14
			2.552	Max N	▷ 3.79	-0.20	-2.13	0.02	0.17	0.19	BC 15
			Links	Min N	▷ -12.10	-0.19	3.99	-0.10	-0.32	-0.51	BC 10
				Max V_y	-5.16	▷ 0.25	0.66	-0.04	-0.06	-0.27	BC 17
				Min V_y	3.29	▷ -0.35	-2.09	0.03	0.22	0.25	BC 14
				Max V_z	-12.06	-0.23	▷ 4.65	-0.10	-0.36	-0.48	BC 8
				Min V_z	-1.52	0.20	▷ -2.15	-0.02	0.16	-0.18	BC 21
				Max M_T	3.29	-0.35	-2.09	▷ 0.03	0.22	0.25	BC 14
				Min M_T	-11.84	-0.11	3.97	▷ -0.10	-0.34	-0.54	BC 11
				Max M_y	3.29	-0.35	-2.09	0.03	▷ 0.22	0.25	BC 14
				Min M_y	-11.80	-0.15	4.63	-0.10	▷ -0.39	-0.51	BC 9
				Max M_z	3.29	-0.35	-2.09	0.03	0.22	▷ 0.25	BC 14
				Min M_z	-11.84	-0.11	3.97	-0.10	-0.34	▷ -0.54	BC 11
			2.552	Max N	▷ 3.79	-0.20	-2.13	0.02	0.17	0.19	BC 15
			Rechts	Min N	▷ -12.10	-0.19	3.99	-0.10	-0.32	-0.51	BC 10
				Max V_y	-5.16	▷ 0.25	0.66	-0.04	-0.06	-0.27	BC 17
				Min V_y	3.29	▷ -0.35	-2.09	0.03	0.22	0.25	BC 14
				Max V_z	-12.06	-0.23	▷ 4.65	-0.10	-0.36	-0.48	BC 8
				Min V_z	-1.52	0.20	▷ -2.15	-0.02	0.16	-0.18	BC 21
				Max M_T	3.29	-0.35	-2.09	▷ 0.03	0.22	0.25	BC 14
				Min M_T	-11.84	-0.11	3.97	▷ -0.10	-0.34	-0.54	BC 11
				Max M_y	3.29	-0.35	-2.09	0.03	▷ 0.22	0.25	BC 14
				Min M_y	-11.80	-0.15	4.63	-0.10	▷ -0.39	-0.51	BC 9
				Max M_z	3.29	-0.35	-2.09	0.03	0.22	▷ 0.25	BC 14
				Min M_z	-11.84	-0.11	3.97	-0.10	-0.34	▷ -0.54	BC 11
			2.581	Max N	▷ 3.80	-0.20	-2.18	0.02	0.11	0.20	BC 15
			Links	Min N	▷ -12.06	-0.21	4.08	-0.10	-0.20	-0.50	BC 10
				Max V_y	-5.15	▷ 0.25	0.68	-0.04	-0.04	-0.28	BC 17
				Min V_y	3.29	▷ -0.35	-2.14	0.03	0.16	0.26	BC 14
				Max V_z	-12.02	-0.25	▷ 4.75	-0.10	-0.23	-0.47	BC 8
				Min V_z	-1.51	0.20	▷ -2.20	-0.02	0.10	-0.19	BC 21
				Max M_T	3.29	-0.35	-2.14	▷ 0.03	0.16	0.26	BC 14
				Min M_T	-11.80	-0.13	4.06	▷ -0.10	-0.23	-0.54	BC 11
				Max M_y	3.29	-0.35	-2.14	0.03	▷ 0.16	0.26	BC 14
				Min M_y	-11.77	-0.17	4.73	-0.10	▷ -0.26	-0.50	BC 9
				Max M_z	3.29	-0.35	-2.14	0.03	0.16	▷ 0.26	BC 14
				Min M_z	-11.80	-0.13	4.06	-0.10	-0.23	▷ -0.54	BC 11
			2.581	Max N	▷ 3.80	-0.20	-2.18	0.02	0.11	0.20	BC 15
			Rechts	Min N	▷ -12.06	-0.21	4.08	-0.10	-0.20	-0.50	BC 10
				Max V_y	-5.15	▷ 0.25	0.68	-0.04	-0.04	-0.28	BC 17
				Min V_y	3.29	▷ -0.35	-2.14	0.03	0.16	0.26	BC 14
				Max V_z	-12.02	-0.25	▷ 4.75	-0.10	-0.23	-0.47	BC 8
				Min V_z	-1.51	0.20	▷ -2.20	-0.02	0.10	-0.19	BC 21
				Max M_T	3.29	-0.35	-2.14	▷ 0.03	0.16	0.26	BC 14
				Min M_T	-11.80	-0.13	4.06	▷ -0.10	-0.23	-0.54	BC 11
				Max M_y	3.29	-0.35	-2.14	0.03	▷ 0.16	0.26	BC 14
				Min M_y	-11.77	-0.17	4.73	-0.10	▷ -0.26	-0.50	BC 9
				Max M_z	3.29	-0.35	-2.14	0.03	0.16	▷ 0.26	BC 14
				Min M_z	-11.80	-0.13	4.06	-0.10	-0.23	▷ -0.54	BC 11
			2.677	Max N	▷ 3.81	-0.20	-2.34	0.02	-0.11	0.22	BC 15
			Links	Min N	▷ -11.94	-0.28	4.35	-0.10	0.21	-0.48	BC 10
				Max V_y	-5.13	▷ 0.24	0.73	-0.04	0.03	-0.30	BC 17
				Min V_y	3.30	▷ -0.36	-2.30	0.03	-0.06	0.30	BC 14
				Max V_z	-11.91	-0.31	▷ 5.07	-0.09	0.24	-0.44	BC 8
				Min V_z	-1.50	0.20	▷ -2.36	-0.02	-0.12	-0.21	BC 21
				Max M_T	3.30	-0.36	-2.30	▷ 0.03	-0.06	0.30	BC 14
				Min M_T	-11.68	-0.20	4.33	▷ -0.10	0.18	-0.52	BC 11
				Max M_y	-11.91	-0.31	5.07	-0.09	▷ 0.24	-0.44	BC 8
				Min M_y	-1.50	0.20	-2.36	-0.02	▷ -0.12	-0.21	BC 21
				Max M_z	3.30	-0.36	-2.30	0.03	-0.06	▷ 0.30	BC 14
				Min M_z	-11.68	-0.20	4.33	-0.10	0.18	▷ -0.52	BC 11
			2.677	Max N	▷ 3.81	-0.20	-2.34	0.02	-0.11	0.22	BC 15
			Rechts	Min N	▷ -11.94	-0.28	4.35	-0.10	0.21	-0.48	BC 10
				Max V_y	-5.13	▷ 0.24	0.73	-0.04	0.03	-0.30	BC 17
				Min V_y	3.30	▷ -0.36	-2.30	0.03	-0.06	0.30	BC 14
				Max V_z	-11.91	-0.31	▷ 5.07	-0.09	0.24	-0.44	BC 8
				Min V_z	-1.50	0.20	▷ -2.36	-0.02	-0.12	-0.21	BC 21
				Max M_T	3.30	-0.36	-2.30	▷ 0.03	-0.06	0.30	BC 14
				Min M_T	-11.68	-0.20	4.33	▷ -0.10	0.18	-0.52	BC 11
				Max M_y	-11.91	-0.31	5.07	-0.09	▷ 0.24	-0.44	BC 8
				Min M_y	-1.50	0.20	-2.36	-0.02	▷ -0.12	-0.21	BC 21
				Max M_z	3.30	-0.36	-2.30	0.03	-0.06	▷ 0.30	BC 14
				Min M_z	-11.68	-0.20	4.33	-0.10	0.18	▷ -0.52	BC 11
			3.260	Max N	▷ 3.86	-0.21	-2.79	0.02	-1.65	0.34	BC 15
			Links	Min N	▷ -11.64	-0.46	5.07	-0.10	3.03	-0.23	BC 10

4.12 DOORSNEDES - SNEDEKRACHTEN

Resultaatcombinaties

Staaf No.	RC	Knoop No.	Snede x [m]		Krachten [kN] N	V_y	V_z	Momenten [kNm] M_T	M_y	M_z	Bijbehorend Belastingsgeval
24	RC1			Max V_y	-5.06	▷ 0.22	0.90	-0.05	0.52	-0.43	BC 17
				Min V_y	-10.69	▷ -0.53	5.06	-0.08	3.04	-0.12	BC 12
				Max V_z	-11.61	-0.49	▷ 5.92	-0.09	3.54	-0.17	BC 8
				Min V_z	-1.45	0.19	▷ -2.81	-0.02	-1.67	-0.32	BC 21
				Max M_T	3.32	-0.40	-2.75	▷ 0.03	-1.58	0.52	BC 14
				Min M_T	-11.37	-0.37	5.05	▷ -0.10	2.99	-0.33	BC 11
				Max M_y	-11.61	-0.49	5.92	-0.09	▷ 3.54	-0.17	BC 8
				Min M_y	-1.45	0.19	-2.81	-0.02	▷ -1.67	-0.32	BC 21
				Max M_z	3.32	-0.40	-2.75	0.03	-1.58	▷ 0.52	BC 14
				Min M_z	-9.38	-0.06	3.39	-0.09	1.99	▷ -0.46	BC 5
		30	3.260	Max N	▷ 3.86	-0.21	-2.79	0.02	-1.65	0.34	BC 15
			Rechts	Min N	▷ -11.64	-0.46	5.07	-0.10	3.03	-0.23	BC 10
				Max V_y	-5.06	▷ 0.22	0.90	-0.05	0.52	-0.43	BC 17
				Min V_y	-10.69	▷ -0.53	5.06	-0.08	3.04	-0.12	BC 12
				Max V_z	-11.61	-0.49	▷ 5.92	-0.09	3.54	-0.17	BC 8
				Min V_z	-1.45	0.19	▷ -2.81	-0.02	-1.67	-0.32	BC 21
				Max M_T	3.32	-0.40	-2.75	▷ 0.03	-1.58	0.52	BC 14
				Min M_T	-11.37	-0.37	5.05	▷ -0.10	2.99	-0.33	BC 11
				Max M_y	-11.61	-0.49	5.92	-0.09	▷ 3.54	-0.17	BC 8
				Min M_y	-1.45	0.19	-2.81	-0.02	▷ -1.67	-0.32	BC 21
				Max M_z	3.32	-0.40	-2.75	0.03	-1.58	▷ 0.52	BC 14
				Min M_z	-9.38	-0.06	3.39	-0.09	1.99	▷ -0.46	BC 5
25	RC1	189	0.000	Max N	▷ 0.00	0.00	0.00	0.00	0.00	0.00	
			Links	Min N	▷ -4.94	1.39	-4.42	-0.01	0.01	1.21	BC 8
				Max V_y	-4.88	▷ 1.44	-3.86	-0.02	0.01	1.28	BC 10
				Min V_y	-0.60	▷ -0.18	1.85	-0.01	0.00	-0.28	BC 15
				Max V_z	-0.75	-0.13	▷ 1.87	-0.01	0.00	-0.34	BC 14
				Min V_z	-4.87	1.37	▷ -4.43	-0.01	0.01	1.23	BC 9
				Max M_T	-1.00	-0.10	-0.42	▷ 0.03	-0.00	-0.29	BC 22
				Min M_T	-0.42	0.19	1.80	▷ -0.03	0.00	0.31	BC 21
				Max M_y	-4.81	1.42	-3.87	-0.02	▷ 0.01	1.31	BC 11
				Min M_y	-1.00	-0.10	-0.42	0.03	▷ -0.00	-0.29	BC 22
				Max M_z	-4.81	1.42	-3.87	-0.02	0.01	▷ 1.31	BC 11
				Min M_z	-0.75	-0.13	1.87	-0.01	0.00	▷ -0.34	BC 14
			0.000	Max N	▷ 0.00	0.00	0.00	0.00	0.00	0.00	
			Rechts	Min N	▷ -4.94	1.39	-4.42	-0.01	0.01	1.21	BC 8
				Max V_y	-4.88	▷ 1.44	-3.86	-0.02	0.01	1.28	BC 10
				Min V_y	-0.60	▷ -0.18	1.85	-0.01	0.00	-0.28	BC 15
				Max V_z	-0.75	-0.13	▷ 1.87	-0.01	0.00	-0.34	BC 14
				Min V_z	-4.87	1.37	▷ -4.43	-0.01	0.01	1.23	BC 9
				Max M_T	-1.00	-0.10	-0.42	▷ 0.03	-0.00	-0.29	BC 22
				Min M_T	-0.42	0.19	1.80	▷ -0.03	0.00	0.31	BC 21
				Max M_y	-4.81	1.42	-3.87	-0.02	▷ 0.01	1.31	BC 11
				Min M_y	-1.00	-0.10	-0.42	0.03	▷ -0.00	-0.29	BC 22
				Max M_z	-4.81	1.42	-3.87	-0.02	0.01	▷ 1.31	BC 11
				Min M_z	-0.75	-0.13	1.87	-0.01	0.00	▷ -0.34	BC 14
			0.583	Max N	▷ 0.00	0.00	0.00	0.00	0.00	0.00	
			Links	Min N	▷ -4.53	1.18	-3.24	-0.01	-2.31	0.42	BC 8
				Max V_y	-4.46	▷ 1.23	-2.82	-0.01	-2.01	0.47	BC 10
				Min V_y	-0.55	▷ -0.18	1.40	-0.01	0.99	-0.18	BC 15
				Max V_z	-0.72	-0.16	▷ 1.43	-0.01	1.01	-0.25	BC 14
				Min V_z	-4.45	1.17	▷ -3.25	-0.01	-2.32	0.46	BC 9
				Max M_T	-0.98	-0.13	-0.30	▷ 0.03	-0.22	-0.23	BC 22
				Min M_T	-0.37	0.19	1.35	▷ -0.03	0.97	0.20	BC 21
				Max M_y	-0.72	-0.16	1.43	-0.01	▷ 1.01	-0.25	BC 14
				Min M_y	-4.45	1.17	-3.25	-0.01	▷ -2.32	0.46	BC 9
				Max M_z	-4.38	1.22	-2.84	-0.02	-2.02	▷ 0.51	BC 11
				Min M_z	-0.72	-0.16	1.43	-0.01	1.01	▷ -0.25	BC 14
			0.583	Max N	▷ 0.00	0.00	0.00	0.00	0.00	0.00	
			Rechts	Min N	▷ -4.53	1.18	-3.24	-0.01	-2.31	0.42	BC 8
				Max V_y	-4.46	▷ 1.23	-2.82	-0.01	-2.01	0.47	BC 10
				Min V_y	-0.55	▷ -0.18	1.40	-0.01	0.99	-0.18	BC 15
				Max V_z	-0.72	-0.16	▷ 1.43	-0.01	1.01	-0.25	BC 14
				Min V_z	-4.45	1.17	▷ -3.25	-0.01	-2.32	0.46	BC 9
				Max M_T	-0.98	-0.13	-0.30	▷ 0.03	-0.22	-0.23	BC 22
				Min M_T	-0.37	0.19	1.35	▷ -0.03	0.97	0.20	BC 21
				Max M_y	-0.72	-0.16	1.43	-0.01	▷ 1.01	-0.25	BC 14
				Min M_y	-4.45	1.17	-3.25	-0.01	▷ -2.32	0.46	BC 9
				Max M_z	-4.38	1.22	-2.84	-0.02	-2.02	▷ 0.51	BC 11
				Min M_z	-0.72	-0.16	1.43	-0.01	1.01	▷ -0.25	BC 14
			0.679	Max N	▷ 0.00	0.00	0.00	0.00	0.00	0.00	
			Links	Min N	▷ -4.40	1.11	-2.86	-0.01	-2.60	0.31	BC 8
				Max V_y	-4.33	▷ 1.15	-2.49	-0.01	-2.27	0.36	BC 10
				Min V_y	-0.54	▷ -0.18	1.24	-0.01	1.12	-0.16	BC 15
				Max V_z	-0.72	-0.17	▷ 1.27	-0.01	1.14	-0.24	BC 14
				Min V_z	-4.31	1.10	▷ -2.87	-0.01	-2.61	0.35	BC 9
				Max M_T	-0.97	-0.14	-0.26	▷ 0.03	-0.25	-0.21	BC 22
				Min M_T	-0.36	0.19	1.19	▷ -0.03	1.09	0.18	BC 21
				Max M_y	-0.72	-0.17	1.27	-0.01	▷ 1.14	-0.24	BC 14
				Min M_y	-4.31	1.10	-2.87	-0.01	▷ -2.61	0.35	BC 9
				Max M_z	-4.24	1.15	-2.51	-0.02	-2.28	▷ 0.39	BC 11
				Min M_z	-0.72	-0.17	1.27	-0.01	1.14	▷ -0.24	BC 14
			0.679	Max N	▷ 0.00	0.00	0.00	0.00	0.00	0.00	
			Rechts	Min N	▷ -4.40	1.11	-2.86	-0.01	-2.60	0.31	BC 8

4.12 DOORSNEDES - SNEDEKRACHTEN

Resultaatcombinaties

Staaf No.	RC	Knoop No.	Snede x [m]		Krachten [kN] N	V_y	V_z	Momenten [kNm] M_T	M_y	M_z	Bijbehorend Belastingsgeval
25	RC1			Max V_y	-4.33	▷ 1.15	-2.49	-0.01	-2.27	0.36	BC 10
				Min V_y	-0.54	▷ -0.18	1.24	-0.01	1.12	-0.16	BC 15
				Max V_z	-0.72	-0.17	▷ 1.27	-0.01	1.14	-0.24	BC 14
				Min V_z	-4.31	1.10	▷ -2.87	-0.01	-2.61	0.35	BC 9
				Max M_T	-0.97	-0.14	-0.26	▷ 0.03	-0.25	-0.21	BC 22
				Min M_T	-0.36	0.19	1.19	▷ -0.03	1.09	0.18	BC 21
				Max M_y	-0.72	-0.17	1.27	-0.01	▷ 1.14	-0.24	BC 14
				Min M_y	-4.31	1.10	-2.87	-0.01	▷ -2.61	0.35	BC 9
				Max M_z	-4.24	1.15	-2.51	-0.02	-2.28	▷ 0.39	BC 11
				Min M_z	-0.72	-0.17	1.27	-0.01	1.14	▷ -0.24	BC 14
			0.707	Max N	▷ 0.00	0.00	0.00	0.00	0.00	0.00	
			Links	Min N	▷ -4.36	1.08	-2.74	-0.01	-2.68	0.28	BC 8
				Max V_y	-4.29	▷ 1.13	-2.39	-0.01	-2.34	0.32	BC 10
				Min V_y	-0.54	▷ -0.18	1.19	-0.01	1.16	-0.16	BC 15
				Max V_z	-0.71	-0.17	▷ 1.22	-0.01	1.17	-0.23	BC 14
				Min V_z	-4.27	1.08	▷ -2.75	-0.01	-2.69	0.32	BC 9
				Max M_T	-0.97	-0.14	-0.25	▷ 0.03	-0.25	-0.21	BC 22
				Min M_T	-0.36	0.19	1.14	▷ -0.03	1.12	0.18	BC 21
				Max M_y	-0.71	-0.17	1.22	-0.01	▷ 1.17	-0.23	BC 14
				Min M_y	-4.27	1.08	-2.75	-0.01	▷ -2.69	0.32	BC 9
				Max M_z	-4.20	1.12	-2.40	-0.02	-2.35	▷ 0.36	BC 11
				Min M_z	-0.71	-0.17	1.22	-0.01	1.17	▷ -0.23	BC 14
			0.707	Max N	▷ 0.00	0.00	0.00	0.00	0.00	0.00	
			Rechts	Min N	▷ -4.36	1.08	-2.74	-0.01	-2.68	0.28	BC 8
				Max V_y	-4.29	▷ 1.13	-2.39	-0.01	-2.34	0.32	BC 10
				Min V_y	-0.54	▷ -0.18	1.19	-0.01	1.16	-0.16	BC 15
				Max V_z	-0.71	-0.17	▷ 1.22	-0.01	1.17	-0.23	BC 14
				Min V_z	-4.27	1.08	▷ -2.75	-0.01	-2.69	0.32	BC 9
				Max M_T	-0.97	-0.14	-0.25	▷ 0.03	-0.25	-0.21	BC 22
				Min M_T	-0.36	0.19	1.14	▷ -0.03	1.12	0.18	BC 21
				Max M_y	-0.71	-0.17	1.22	-0.01	▷ 1.17	-0.23	BC 14
				Min M_y	-4.27	1.08	-2.75	-0.01	▷ -2.69	0.32	BC 9
				Max M_z	-4.20	1.12	-2.40	-0.02	-2.35	▷ 0.36	BC 11
				Min M_z	-0.71	-0.17	1.22	-0.01	1.17	▷ -0.23	BC 14
			2.552	Max N	▷ 0.00	0.00	0.00	0.00	0.00	0.00	
			Links	Min N	▷ -1.66	-0.40	4.71	0.00	-0.75	-0.33	BC 8
				Max V_y	-0.07	▷ 0.20	-2.12	-0.03	0.22	-0.18	BC 21
				Min V_y	-1.60	▷ -0.42	4.09	-0.00	-0.63	-0.32	BC 12
				Max V_z	-1.66	-0.40	▷ 4.71	0.00	-0.75	-0.33	BC 8
				Min V_z	-0.07	0.20	▷ -2.12	-0.03	0.22	-0.18	BC 21
				Max M_T	-0.84	-0.30	0.45	▷ 0.03	-0.07	0.20	BC 22
				Min M_T	-0.41	0.03	-2.07	▷ -0.03	0.31	-0.11	BC 20
				Max M_y	-0.59	-0.33	-2.03	-0.01	▷ 0.42	0.23	BC 14
				Min M_y	-1.49	-0.31	4.68	-0.00	▷ -0.80	-0.37	BC 9
				Max M_z	-0.59	-0.33	-2.03	-0.01	0.42	▷ 0.23	BC 14
				Min M_z	-1.42	-0.27	4.05	-0.01	-0.72	▷ -0.41	BC 11
			2.552	Max N	▷ 0.00	0.00	0.00	0.00	0.00	0.00	
			Rechts	Min N	▷ -1.66	-0.40	4.71	0.00	-0.75	-0.33	BC 8
				Max V_y	-0.07	▷ 0.20	-2.12	-0.03	0.22	-0.18	BC 21
				Min V_y	-1.60	▷ -0.42	4.09	-0.00	-0.63	-0.32	BC 12
				Max V_z	-1.66	-0.40	▷ 4.71	0.00	-0.75	-0.33	BC 8
				Min V_z	-0.07	0.20	▷ -2.12	-0.03	0.22	-0.18	BC 21
				Max M_T	-0.84	-0.30	0.45	▷ 0.03	-0.07	0.20	BC 22
				Min M_T	-0.41	0.03	-2.07	▷ -0.03	0.31	-0.11	BC 20
				Max M_y	-0.59	-0.33	-2.03	-0.01	▷ 0.42	0.23	BC 14
				Min M_y	-1.49	-0.31	4.68	-0.00	▷ -0.80	-0.37	BC 9
				Max M_z	-0.59	-0.33	-2.03	-0.01	0.42	▷ 0.23	BC 14
				Min M_z	-1.42	-0.27	4.05	-0.01	-0.72	▷ -0.41	BC 11
			2.581	Max N	▷ 0.00	0.00	0.00	0.00	0.00	0.00	
			Links	Min N	▷ -1.62	-0.42	4.82	0.00	-0.62	-0.32	BC 8
				Max V_y	-0.07	▷ 0.20	-2.17	-0.03	0.16	-0.18	BC 21
				Min V_y	-1.56	▷ -0.44	4.19	-0.00	-0.51	-0.31	BC 12
				Max V_z	-1.62	-0.42	▷ 4.82	0.00	-0.62	-0.32	BC 8
				Min V_z	-0.07	0.20	▷ -2.17	-0.03	0.16	-0.18	BC 21
				Max M_T	-0.84	-0.30	0.46	▷ 0.03	-0.05	0.21	BC 22
				Min M_T	-0.40	0.03	-2.12	▷ -0.03	0.25	-0.11	BC 20
				Max M_y	-0.59	-0.34	-2.08	-0.01	▷ 0.36	0.24	BC 14
				Min M_y	-1.45	-0.33	4.79	-0.00	▷ -0.67	-0.36	BC 9
				Max M_z	-0.59	-0.34	-2.08	-0.01	0.36	▷ 0.24	BC 14
				Min M_z	-1.38	-0.29	4.14	-0.01	-0.61	▷ -0.40	BC 11
			2.581	Max N	▷ 0.00	0.00	0.00	0.00	0.00	0.00	
			Rechts	Min N	▷ -1.62	-0.42	4.82	0.00	-0.62	-0.32	BC 8
				Max V_y	-0.07	▷ 0.20	-2.17	-0.03	0.16	-0.18	BC 21
				Min V_y	-1.56	▷ -0.44	4.19	-0.00	-0.51	-0.31	BC 12
				Max V_z	-1.62	-0.42	▷ 4.82	0.00	-0.62	-0.32	BC 8
				Min V_z	-0.07	0.20	▷ -2.17	-0.03	0.16	-0.18	BC 21
				Max M_T	-0.84	-0.30	0.46	▷ 0.03	-0.05	0.21	BC 22
				Min M_T	-0.40	0.03	-2.12	▷ -0.03	0.25	-0.11	BC 20
				Max M_y	-0.59	-0.34	-2.08	-0.01	▷ 0.36	0.24	BC 14
				Min M_y	-1.45	-0.33	4.79	-0.00	▷ -0.67	-0.36	BC 9
				Max M_z	-0.59	-0.34	-2.08	-0.01	0.36	▷ 0.24	BC 14
				Min M_z	-1.38	-0.29	4.14	-0.01	-0.61	▷ -0.40	BC 11
			2.677	Max N	▷ 0.00	0.00	0.00	0.00	0.00	0.00	
			Links	Min N	▷ -1.49	-0.49	5.17	0.00	-0.14	-0.28	BC 8

4.12 DOORSNEDES - SNEDEKRACHTEN

Resultaatcombinaties

Staaf No.	RC	Knoop No.	Snede x [m]		Krachten [kN] N	V_y	V_z	Momenten [kNm] M_T	M_y	M_z	Bijbehorend Belastingsgeval
25	RC1			Max V_y	-0.06	▷ 0.20	-2.34	-0.03	-0.06	-0.20	BC 21
				Min V_y	-1.43	▷ -0.51	4.49	-0.00	-0.09	-0.26	BC 12
				Max V_z	-1.49	-0.49	▷ 5.17	0.00	-0.14	-0.28	BC 8
				Min V_z	-0.06	0.20	▷ -2.34	-0.03	-0.06	-0.20	BC 21
				Max M_T	-0.84	-0.31	0.50	▷ 0.03	-0.01	0.24	BC 22
				Min M_T	-0.40	0.02	-2.28	▷ -0.03	0.04	-0.11	BC 20
				Max M_y	-0.58	-0.34	-2.24	-0.01	▷ 0.15	0.28	BC 14
				Min M_y	-1.25	-0.35	4.44	-0.01	▷ -0.19	-0.37	BC 11
				Max M_z	-0.58	-0.34	-2.24	-0.01	0.15	▷ 0.28	BC 14
				Min M_z	-1.25	-0.35	4.44	-0.01	-0.19	▷ -0.37	BC 11
			2.677	Max N	▷ 0.00	0.00	0.00	0.00	0.00	0.00	
			Rechts	Min N	▷ -1.49	-0.49	5.17	0.00	-0.14	-0.28	BC 8
				Max V_y	-0.06	▷ 0.20	-2.34	-0.03	-0.06	-0.20	BC 21
				Min V_y	-1.43	▷ -0.51	4.49	-0.00	-0.09	-0.26	BC 12
				Max V_z	-1.49	-0.49	▷ 5.17	0.00	-0.14	-0.28	BC 8
				Min V_z	-0.06	0.20	▷ -2.34	-0.03	-0.06	-0.20	BC 21
				Max M_T	-0.84	-0.31	0.50	▷ 0.03	-0.01	0.24	BC 22
				Min M_T	-0.40	0.02	-2.28	▷ -0.03	0.04	-0.11	BC 20
				Max M_y	-0.58	-0.34	-2.24	-0.01	▷ 0.15	0.28	BC 14
				Min M_y	-1.25	-0.35	4.44	-0.01	▷ -0.19	-0.37	BC 11
				Max M_z	-0.58	-0.34	-2.24	-0.01	0.15	▷ 0.28	BC 14
				Min M_z	-1.25	-0.35	4.44	-0.01	-0.19	▷ -0.37	BC 11
			3.260	Max N	▷ 0.00	0.00	0.00	0.00	0.00	0.00	
			Links	Min N	▷ -1.19	-0.46	5.22	0.01	2.81	0.09	BC 2
				Max V_y	-0.01	▷ 0.20	-2.78	-0.03	-1.60	-0.32	BC 21
				Min V_y	-1.10	▷ -0.69	5.29	-0.00	2.84	0.11	BC 12
				Max V_z	-1.16	-0.66	▷ 6.11	0.00	3.24	0.09	BC 8
				Min V_z	-0.01	0.20	▷ -2.78	-0.03	-1.60	-0.32	BC 21
				Max M_T	-0.81	-0.34	0.62	▷ 0.03	0.33	0.43	BC 22
				Min M_T	-0.37	-0.01	-2.73	▷ -0.03	-1.47	-0.11	BC 20
				Max M_y	-1.16	-0.66	6.11	0.00	▷ 3.24	0.09	BC 8
				Min M_y	-0.01	0.20	-2.78	-0.03	▷ -1.60	-0.32	BC 21
				Max M_z	-0.55	-0.37	-2.68	-0.01	-1.33	▷ 0.49	BC 14
				Min M_z	-0.37	0.17	0.85	-0.01	0.36	▷ -0.34	BC 17
		29	3.260	Max N	▷ 0.00	0.00	0.00	0.00	0.00	0.00	
			Rechts	Min N	▷ -1.19	-0.46	5.22	0.01	2.81	0.09	BC 2
				Max V_y	-0.01	▷ 0.20	-2.78	-0.03	-1.60	-0.32	BC 21
				Min V_y	-1.10	▷ -0.69	5.29	-0.00	2.84	0.11	BC 12
				Max V_z	-1.16	-0.66	▷ 6.11	0.00	3.24	0.09	BC 8
				Min V_z	-0.01	0.20	▷ -2.78	-0.03	-1.60	-0.32	BC 21
				Max M_T	-0.81	-0.34	0.62	▷ 0.03	0.33	0.43	BC 22
				Min M_T	-0.37	-0.01	-2.73	▷ -0.03	-1.47	-0.11	BC 20
				Max M_y	-1.16	-0.66	6.11	0.00	▷ 3.24	0.09	BC 8
				Min M_y	-0.01	0.20	-2.78	-0.03	▷ -1.60	-0.32	BC 21
				Max M_z	-0.55	-0.37	-2.68	-0.01	-1.33	▷ 0.49	BC 14
				Min M_z	-0.37	0.17	0.85	-0.01	0.36	▷ -0.34	BC 17
26	RC1	187	0.000	Max N	▷ 2.18	0.20	1.79	-0.03	-0.00	0.19	BC 20
			Links	Min N	▷ -4.68	1.32	-4.65	0.05	0.00	1.06	BC 9
				Max V_y	-4.07	▷ 1.40	-4.08	0.04	0.00	1.12	BC 10
				Min V_y	-0.88	▷ -0.21	-0.41	0.09	-0.00	-0.34	BC 23
				Max V_z	0.67	-0.07	▷ 1.87	-0.03	0.00	-0.24	BC 14
				Min V_z	-4.68	1.32	▷ -4.65	0.05	0.00	1.06	BC 9
				Max M_T	-0.88	-0.21	-0.41	▷ 0.09	-0.00	-0.34	BC 23
				Min M_T	2.18	0.20	1.79	▷ -0.03	-0.00	0.19	BC 20
				Max M_y	-4.68	1.32	-4.65	0.05	▷ 0.00	1.06	BC 9
				Min M_y	-0.88	-0.21	-0.41	0.09	▷ -0.00	-0.34	BC 23
				Max M_z	-4.18	1.36	-4.10	0.04	0.00	▷ 1.12	BC 11
				Min M_z	-0.65	-0.14	-0.38	0.09	-0.00	▷ -0.35	BC 22
			0.000	Max N	▷ 2.18	0.20	1.79	-0.03	-0.00	0.19	BC 20
			Rechts	Min N	▷ -4.68	1.32	-4.65	0.05	0.00	1.06	BC 9
				Max V_y	-4.07	▷ 1.40	-4.08	0.04	0.00	1.12	BC 10
				Min V_y	-0.88	▷ -0.21	-0.41	0.09	-0.00	-0.34	BC 23
				Max V_z	0.67	-0.07	▷ 1.87	-0.03	0.00	-0.24	BC 14
				Min V_z	-4.68	1.32	▷ -4.65	0.05	0.00	1.06	BC 9
				Max M_T	-0.88	-0.21	-0.41	▷ 0.09	-0.00	-0.34	BC 23
				Min M_T	2.18	0.20	1.79	▷ -0.03	-0.00	0.19	BC 20
				Max M_y	-4.18	1.36	-4.10	0.04	▷ 0.00	1.12	BC 11
				Min M_y	-0.88	-0.21	-0.41	0.09	▷ -0.00	-0.34	BC 23
				Max M_z	-4.18	1.36	-4.10	0.04	0.00	▷ 1.12	BC 11
				Min M_z	-0.65	-0.14	-0.38	0.09	-0.00	▷ -0.35	BC 22
			0.583	Max N	▷ 2.20	0.17	1.35	-0.03	0.96	0.08	BC 20
			Links	Min N	▷ -4.23	1.10	-3.41	0.05	-2.44	0.32	BC 9
				Max V_y	-3.62	▷ 1.17	-2.98	0.04	-2.14	0.34	BC 10
				Min V_y	-0.83	▷ -0.21	-0.29	0.09	-0.22	-0.22	BC 23
				Max V_z	0.69	-0.10	▷ 1.43	-0.03	1.01	-0.19	BC 14
				Min V_z	-4.23	1.10	▷ -3.41	0.05	-2.44	0.32	BC 9
				Max M_T	-0.83	-0.21	-0.29	▷ 0.09	-0.22	-0.22	BC 23
				Min M_T	2.20	0.17	1.35	▷ -0.03	0.96	0.08	BC 20
				Max M_y	0.69	-0.10	1.43	-0.03	▷ 1.01	-0.19	BC 14
				Min M_y	-4.23	1.10	-3.41	0.05	▷ -2.44	0.32	BC 9
				Max M_z	-3.72	1.14	-3.00	0.04	-2.15	▷ 0.36	BC 11
				Min M_z	-0.62	-0.17	-0.25	0.09	-0.19	▷ -0.27	BC 22
			0.583	Max N	▷ 2.20	0.17	1.35	-0.03	0.96	0.08	BC 20
			Rechts	Min N	▷ -4.23	1.10	-3.41	0.05	-2.44	0.32	BC 9

4.12 DOORSNEDES - SNEDEKRACHTEN

Resultaatcombinaties

Staaf No.	RC	Knoop No.	Snede x [m]		Krachten [kN] N	V_y	V_z	Momenten [kNm] M_T	M_y	M_z	Bijbehorend Belastingsgeval
26	RC1			Max V_y	-3.62	1.17	-2.98	0.04	-2.14	0.34	BC 10
				Min V_y	-0.83	-0.21	-0.29	0.09	-0.22	-0.22	BC 23
				Max V_z	0.69	-0.10	1.43	-0.03	1.01	-0.19	BC 14
				Min V_z	-4.23	1.10	-3.41	0.05	-2.44	0.32	BC 9
				Max M_T	-0.83	-0.21	-0.29	0.09	-0.22	-0.22	BC 23
				Min M_T	2.20	0.17	1.35	-0.03	0.96	0.08	BC 20
				Max M_y	0.69	-0.10	1.43	-0.03	1.01	-0.19	BC 14
				Min M_y	-4.23	1.10	-3.41	0.05	-2.44	0.32	BC 9
				Max M_z	-3.72	1.14	-3.00	0.04	-2.15	0.36	BC 11
				Min M_z	-0.62	-0.17	-0.25	0.09	-0.19	-0.27	BC 22
			0.679	Max N	2.21	0.16	1.19	-0.03	1.08	0.07	BC 20
			Links	Min N	-4.08	1.03	-3.01	0.05	-2.75	0.22	BC 9
				Max V_y	-3.48	1.08	-2.63	0.04	-2.40	0.23	BC 10
				Min V_y	-0.82	-0.21	-0.26	0.09	-0.24	-0.20	BC 23
				Max V_z	0.70	-0.11	1.27	-0.03	1.14	-0.18	BC 14
				Min V_z	-4.08	1.03	-3.01	0.05	-2.75	0.22	BC 9
				Max M_T	-0.82	-0.21	-0.26	0.09	-0.24	-0.20	BC 23
				Min M_T	2.21	0.16	1.19	-0.03	1.08	0.07	BC 20
				Max M_y	0.70	-0.11	1.27	-0.03	1.14	-0.18	BC 14
				Min M_y	-4.08	1.03	-3.01	0.05	-2.75	0.22	BC 9
				Max M_z	-3.58	1.06	-2.65	0.04	-2.42	0.25	BC 11
				Min M_z	-0.61	-0.17	-0.22	0.09	-0.22	-0.25	BC 22
			0.679	Max N	2.21	0.16	1.19	-0.03	1.08	0.07	BC 20
			Rechts	Min N	-4.08	1.03	-3.01	0.05	-2.75	0.22	BC 9
				Max V_y	-3.48	1.08	-2.63	0.04	-2.40	0.23	BC 10
				Min V_y	-0.82	-0.21	-0.26	0.09	-0.24	-0.20	BC 23
				Max V_z	0.70	-0.11	1.27	-0.03	1.14	-0.18	BC 14
				Min V_z	-4.08	1.03	-3.01	0.05	-2.75	0.22	BC 9
				Max M_T	-0.82	-0.21	-0.26	0.09	-0.24	-0.20	BC 23
				Min M_T	2.21	0.16	1.19	-0.03	1.08	0.07	BC 20
				Max M_y	0.70	-0.11	1.27	-0.03	1.14	-0.18	BC 14
				Min M_y	-4.08	1.03	-3.01	0.05	-2.75	0.22	BC 9
				Max M_z	-3.58	1.06	-2.65	0.04	-2.42	0.25	BC 11
				Min M_z	-0.61	-0.17	-0.22	0.09	-0.22	-0.25	BC 22
			0.707	Max N	2.21	0.15	1.14	-0.03	1.12	0.06	BC 20
			Links	Min N	-4.04	1.00	-2.88	0.05	-2.83	0.19	BC 9
				Max V_y	-3.44	1.06	-2.52	0.04	-2.48	0.20	BC 10
				Min V_y	-0.82	-0.21	-0.25	0.09	-0.25	-0.19	BC 23
				Max V_z	0.70	-0.11	1.22	-0.03	1.17	-0.18	BC 14
				Min V_z	-4.04	1.00	-2.88	0.05	-2.83	0.19	BC 9
				Max M_T	-0.82	-0.21	-0.25	0.09	-0.25	-0.19	BC 23
				Min M_T	2.21	0.15	1.14	-0.03	1.12	0.06	BC 20
				Max M_y	0.70	-0.11	1.22	-0.03	1.17	-0.18	BC 14
				Min M_y	-4.04	1.00	-2.88	0.05	-2.83	0.19	BC 9
				Max M_z	-3.53	1.04	-2.54	0.04	-2.49	0.22	BC 11
				Min M_z	-0.61	-0.18	-0.21	0.09	-0.22	-0.24	BC 22
			0.707	Max N	2.21	0.15	1.14	-0.03	1.12	0.06	BC 20
			Rechts	Min N	-4.04	1.00	-2.88	0.05	-2.83	0.19	BC 9
				Max V_y	-3.44	1.06	-2.52	0.04	-2.48	0.20	BC 10
				Min V_y	-0.82	-0.21	-0.25	0.09	-0.25	-0.19	BC 23
				Max V_z	0.70	-0.11	1.22	-0.03	1.17	-0.18	BC 14
				Min V_z	-4.04	1.00	-2.88	0.05	-2.83	0.19	BC 9
				Max M_T	-0.82	-0.21	-0.25	0.09	-0.25	-0.19	BC 23
				Min M_T	2.21	0.15	1.14	-0.03	1.12	0.06	BC 20
				Max M_y	0.70	-0.11	1.22	-0.03	1.17	-0.18	BC 14
				Min M_y	-4.04	1.00	-2.88	0.05	-2.83	0.19	BC 9
				Max M_z	-3.53	1.04	-2.54	0.04	-2.49	0.22	BC 11
				Min M_z	-0.61	-0.18	-0.21	0.09	-0.22	-0.24	BC 22
			2.552	Max N	2.34	-0.01	-2.08	-0.03	0.25	-0.07	BC 20
			Links	Min N	-1.06	-0.50	5.01	0.06	-0.75	-0.25	BC 9
				Max V_y	2.30	0.13	-2.15	-0.03	0.12	-0.12	BC 21
				Min V_y	-1.03	-0.57	5.05	0.06	-0.68	-0.22	BC 8
				Max V_z	-1.03	-0.57	5.05	0.06	-0.68	-0.22	BC 8
				Min V_z	2.30	0.13	-2.15	-0.03	0.12	-0.12	BC 21
				Max M_T	-0.54	-0.20	0.43	0.09	-0.08	0.18	BC 23
				Min M_T	2.34	-0.01	-2.08	-0.03	0.25	-0.07	BC 20
				Max M_y	0.83	-0.27	-2.01	-0.03	0.44	0.17	BC 14
				Min M_y	-1.06	-0.50	5.01	0.06	-0.75	-0.25	BC 9
				Max M_z	-0.49	-0.34	0.50	0.08	0.05	0.23	BC 22
				Min M_z	-0.55	-0.47	4.36	0.05	-0.70	-0.28	BC 11
			2.552	Max N	2.34	-0.01	-2.08	-0.03	0.25	-0.07	BC 20
			Rechts	Min N	-1.06	-0.50	5.01	0.06	-0.75	-0.25	BC 9
				Max V_y	2.30	0.13	-2.15	-0.03	0.12	-0.12	BC 21
				Min V_y	-1.03	-0.57	5.05	0.06	-0.68	-0.22	BC 8
				Max V_z	-1.03	-0.57	5.05	0.06	-0.68	-0.22	BC 8
				Min V_z	2.30	0.13	-2.15	-0.03	0.12	-0.12	BC 21
				Max M_T	-0.54	-0.20	0.43	0.09	-0.08	0.18	BC 23
				Min M_T	2.34	-0.01	-2.08	-0.03	0.25	-0.07	BC 20
				Max M_y	0.83	-0.27	-2.01	-0.03	0.44	0.17	BC 14
				Min M_y	-1.06	-0.50	5.01	0.06	-0.75	-0.25	BC 9
				Max M_z	-0.49	-0.34	0.50	0.08	0.05	0.23	BC 22
				Min M_z	-0.55	-0.47	4.36	0.05	-0.70	-0.28	BC 11
			2.581	Max N	2.34	-0.01	-2.13	-0.03	0.19	-0.07	BC 20
			Links	Min N	-1.01	-0.52	5.13	0.06	-0.61	-0.23	BC 9

4.12 DOORSNEDES - SNEDEKRACHTEN

Resultaatcombinaties

Staaf No.	RC	Knoop No.	Snede x [m]		Krachten [kN] N	V_y	V_z	Momenten [kNm] M_T	M_y	M_z	Bijbehorend Belastingsgeval
26	RC1			Max V_y	2.30	⊳ 0.13	-2.20	-0.03	0.06	-0.12	BC 21
				Min V_y	-0.99	⊳ -0.60	5.16	0.06	-0.54	-0.21	BC 8
				Max V_z	-0.99	-0.60	⊳ 5.16	0.06	-0.54	-0.21	BC 8
				Min V_z	2.30	0.13	⊳ -2.20	-0.03	0.06	-0.12	BC 21
				Max M_T	-0.53	-0.20	0.44	⊳ 0.09	-0.07	0.19	BC 23
				Min M_T	2.34	-0.01	-2.13	⊳ -0.03	0.19	-0.07	BC 20
				Max M_y	0.83	-0.27	-2.06	-0.03	⊳ 0.39	0.18	BC 14
				Min M_y	-1.01	-0.52	5.13	0.06	⊳ -0.61	-0.23	BC 9
				Max M_z	-0.49	-0.34	0.51	0.08	0.06	⊳ 0.24	BC 22
				Min M_z	-0.51	-0.49	4.47	0.05	-0.58	⊳ -0.26	BC 11
			2.581	Max N	⊳ 2.34	-0.01	-2.13	-0.03	0.19	-0.07	BC 20
			Rechts	Min N	⊳ -1.01	-0.52	5.13	0.06	-0.61	-0.23	BC 9
				Max V_y	2.30	⊳ 0.13	-2.20	-0.03	0.06	-0.12	BC 21
				Min V_y	-0.99	⊳ -0.60	5.16	0.06	-0.54	-0.21	BC 8
				Max V_z	-0.99	-0.60	⊳ 5.16	0.06	-0.54	-0.21	BC 8
				Min V_z	2.30	0.13	⊳ -2.20	-0.03	0.06	-0.12	BC 21
				Max M_T	-0.53	-0.20	0.44	⊳ 0.09	-0.07	0.19	BC 23
				Min M_T	2.34	-0.01	-2.13	⊳ -0.03	0.19	-0.07	BC 20
				Max M_y	0.83	-0.27	-2.06	-0.03	⊳ 0.39	0.18	BC 14
				Min M_y	-1.01	-0.52	5.13	0.06	⊳ -0.61	-0.23	BC 9
				Max M_z	-0.49	-0.34	0.51	0.08	0.06	⊳ 0.24	BC 22
				Min M_z	-0.51	-0.49	4.47	0.05	-0.58	⊳ -0.26	BC 11
			2.677	Max N	⊳ 2.35	-0.02	-2.29	-0.03	-0.02	-0.07	BC 20
			Links	Min N	⊳ -0.87	-0.59	5.50	0.06	-0.09	-0.18	BC 9
				Max V_y	2.31	⊳ 0.13	-2.36	-0.03	-0.16	-0.13	BC 21
				Min V_y	-0.85	⊳ -0.67	5.53	0.06	-0.02	-0.14	BC 8
				Max V_z	-0.85	-0.67	⊳ 5.53	0.06	-0.02	-0.14	BC 8
				Min V_z	2.31	0.13	⊳ -2.36	-0.03	-0.16	-0.13	BC 21
				Max M_T	-0.52	-0.19	0.47	⊳ 0.09	-0.03	0.21	BC 23
				Min M_T	2.35	-0.02	-2.29	⊳ -0.03	-0.02	-0.07	BC 20
				Max M_y	0.84	-0.28	-2.22	-0.03	⊳ 0.18	0.21	BC 14
				Min M_y	0.48	-0.25	3.12	0.03	⊳ -0.16	-0.21	BC 5
				Max M_z	-0.48	-0.35	0.54	0.08	0.11	⊳ 0.27	BC 22
				Min M_z	-0.36	-0.56	4.79	0.05	-0.13	⊳ -0.21	BC 11
			2.677	Max N	⊳ 2.35	-0.02	-2.29	-0.03	-0.02	-0.07	BC 20
			Rechts	Min N	⊳ -0.87	-0.59	5.50	0.06	-0.09	-0.18	BC 9
				Max V_y	2.31	⊳ 0.13	-2.36	-0.03	-0.16	-0.13	BC 21
				Min V_y	-0.85	⊳ -0.67	5.53	0.06	-0.02	-0.14	BC 8
				Max V_z	-0.85	-0.67	⊳ 5.53	0.06	-0.02	-0.14	BC 8
				Min V_z	2.31	0.13	⊳ -2.36	-0.03	-0.16	-0.13	BC 21
				Max M_T	-0.52	-0.19	0.47	⊳ 0.09	-0.03	0.21	BC 23
				Min M_T	2.35	-0.02	-2.29	⊳ -0.03	-0.02	-0.07	BC 20
				Max M_y	0.84	-0.28	-2.22	-0.03	⊳ 0.18	0.21	BC 14
				Min M_y	0.48	-0.25	3.12	0.03	⊳ -0.16	-0.21	BC 5
				Max M_z	-0.48	-0.35	0.54	0.08	0.11	⊳ 0.27	BC 22
				Min M_z	-0.36	-0.56	4.79	0.05	-0.13	⊳ -0.21	BC 11
			3.260	Max N	⊳ 2.37	-0.05	-2.74	-0.03	-1.54	-0.05	BC 20
			Links	Min N	⊳ -0.51	-0.77	6.50	0.06	3.50	0.25	BC 9
				Max V_y	2.36	⊳ 0.13	-2.81	-0.03	-1.72	-0.21	BC 21
				Min V_y	-0.17	⊳ -0.86	5.70	0.04	3.15	0.32	BC 12
				Max V_z	-0.50	-0.86	⊳ 6.53	0.06	3.59	0.34	BC 8
				Min V_z	2.36	0.13	⊳ -2.81	-0.03	-1.72	-0.21	BC 21
				Max M_T	-0.47	-0.20	0.60	⊳ 0.09	0.29	0.33	BC 23
				Min M_T	2.37	-0.05	-2.74	⊳ -0.03	-1.54	-0.05	BC 20
				Max M_y	-0.50	-0.86	6.53	0.06	⊳ 3.59	0.34	BC 8
				Min M_y	2.36	0.13	-2.81	-0.03	⊳ -1.72	-0.21	BC 21
				Max M_z	-0.45	-0.37	0.67	0.08	0.47	⊳ 0.49	BC 22
				Min M_z	2.36	0.13	-2.81	-0.03	-1.72	⊳ -0.21	BC 21
		28	3.260	Max N	⊳ 2.37	-0.05	-2.74	-0.03	-1.54	-0.05	BC 20
			Rechts	Min N	⊳ -0.51	-0.77	6.50	0.06	3.50	0.25	BC 9
				Max V_y	2.36	⊳ 0.13	-2.81	-0.03	-1.72	-0.21	BC 21
				Min V_y	-0.17	⊳ -0.86	5.70	0.04	3.15	0.32	BC 12
				Max V_z	-0.50	-0.86	⊳ 6.53	0.06	3.59	0.34	BC 8
				Min V_z	2.36	0.13	⊳ -2.81	-0.03	-1.72	-0.21	BC 21
				Max M_T	-0.47	-0.20	0.60	⊳ 0.09	0.29	0.33	BC 23
				Min M_T	2.37	-0.05	-2.74	⊳ -0.03	-1.54	-0.05	BC 20
				Max M_y	-0.50	-0.86	6.53	0.06	⊳ 3.59	0.34	BC 8
				Min M_y	2.36	0.13	-2.81	-0.03	⊳ -1.72	-0.21	BC 21
				Max M_z	-0.45	-0.37	0.67	0.08	0.47	⊳ 0.49	BC 22
				Min M_z	2.36	0.13	-2.81	-0.03	-1.72	⊳ -0.21	BC 21
27	RC1	210	0.000	Max N	⊳ 2.18	0.20	-1.79	0.03	0.00	0.19	BC 20
			Links	Min N	⊳ -4.78	1.46	4.63	-0.06	-0.00	1.17	BC 13
				Max V_y	-4.09	⊳ 1.55	4.07	-0.03	-0.00	1.30	BC 11
				Min V_y	0.67	⊳ -0.07	-1.87	0.03	-0.00	-0.24	BC 14
				Max V_z	-4.75	1.31	⊳ 4.64	-0.07	-0.00	0.98	BC 12
				Min V_z	1.43	0.40	⊳ -1.90	0.10	0.00	0.44	BC 23
				Max M_T	1.48	0.11	-1.87	⊳ 0.10	0.00	0.07	BC 22
				Min M_T	-3.19	0.77	3.79	⊳ -0.09	-0.00	0.50	BC 6
				Max M_y	1.43	0.40	-1.90	0.10	⊳ 0.00	0.44	BC 23
				Min M_y	-4.78	1.46	4.63	-0.06	⊳ -0.00	1.17	BC 13
				Max M_z	-4.09	1.55	4.07	-0.03	-0.00	⊳ 1.30	BC 11
				Min M_z	0.67	-0.07	-1.87	0.03	-0.00	⊳ -0.24	BC 14
			0.000	Max N	⊳ 2.18	0.20	-1.79	0.03	0.00	0.19	BC 20
			Rechts	Min N	⊳ -4.78	1.46	4.63	-0.06	-0.00	1.17	BC 13

4.12 DOORSNEDES - SNEDEKRACHTEN

Resultaatcombinaties

Staaf No.	RC	Knoop No.	Snede x [m]		Krachten [kN] N	V_y	V_z	Momenten [kNm] M_T	M_y	M_z	Bijbehorend Belastingsgeval
27	RC1			Max V_y	-4.09	▷ 1.55	4.07	-0.03	-0.00	1.30	BC 11
				Min V_y	0.67	▷ -0.07	-1.87	0.03	-0.00	-0.24	BC 14
				Max V_z	-4.75	1.31	▷ 4.64	-0.07	-0.00	0.98	BC 12
				Min V_z	1.43	0.40	▷ -1.90	0.10	0.00	0.44	BC 23
				Max M_T	1.48	0.11	-1.87	▷ 0.10	0.00	0.07	BC 22
				Min M_T	-3.19	0.77	3.79	▷ -0.09	-0.00	0.50	BC 6
				Max M_y	1.43	0.40	-1.90	0.10	▷ 0.00	0.44	BC 23
				Min M_y	-4.78	1.46	4.63	-0.06	▷ -0.00	1.17	BC 13
				Max M_z	-4.09	1.55	4.07	-0.03	-0.00	▷ 1.30	BC 11
				Min M_z	0.67	-0.07	-1.87	0.03	-0.00	▷ -0.24	BC 14
			0.583	Max N	▷ 2.20	0.17	-1.35	0.03	-0.96	0.08	BC 20
			Links	Min N	▷ -4.33	1.22	3.39	-0.07	2.42	0.35	BC 13
				Max V_y	-3.63	▷ 1.30	2.98	-0.04	2.13	0.44	BC 11
				Min V_y	0.69	▷ -0.10	-1.43	0.03	-1.01	-0.19	BC 14
				Max V_z	-4.32	1.08	▷ 3.39	-0.07	2.43	0.25	BC 12
				Min V_z	1.47	0.35	▷ -1.44	0.10	-1.02	0.21	BC 23
				Max M_T	1.50	0.08	-1.43	▷ 0.10	-1.01	0.01	BC 22
				Min M_T	-2.91	0.62	2.76	▷ -0.09	1.99	0.07	BC 6
				Max M_y	-4.32	1.08	3.39	-0.07	▷ 2.43	0.25	BC 12
				Min M_y	0.66	0.17	-1.44	0.03	▷ -1.02	0.01	BC 15
				Max M_z	-1.55	1.06	1.95	-0.02	1.40	▷ 0.45	BC 5
				Min M_z	0.69	-0.10	-1.43	0.03	-1.01	▷ -0.19	BC 14
			0.583	Max N	▷ 2.20	0.17	-1.35	0.03	-0.96	0.08	BC 20
			Rechts	Min N	▷ -4.33	1.22	3.39	-0.07	2.42	0.35	BC 13
				Max V_y	-3.63	▷ 1.30	2.98	-0.04	2.13	0.44	BC 11
				Min V_y	0.69	▷ -0.10	-1.43	0.03	-1.01	-0.19	BC 14
				Max V_z	-4.32	1.08	▷ 3.39	-0.07	2.43	0.25	BC 12
				Min V_z	1.47	0.35	▷ -1.44	0.10	-1.02	0.21	BC 23
				Max M_T	1.50	0.08	-1.43	▷ 0.10	-1.01	0.01	BC 22
				Min M_T	-2.91	0.62	2.76	▷ -0.09	1.99	0.07	BC 6
				Max M_y	-4.32	1.08	3.39	-0.07	▷ 2.43	0.25	BC 12
				Min M_y	0.66	0.17	-1.44	0.03	▷ -1.02	0.01	BC 15
				Max M_z	-1.55	1.06	1.95	-0.02	1.40	▷ 0.45	BC 5
				Min M_z	0.69	-0.10	-1.43	0.03	-1.01	▷ -0.19	BC 14
			0.679	Max N	▷ 2.21	0.16	-1.19	0.03	-1.08	0.07	BC 20
			Links	Min N	▷ -4.18	1.13	2.99	-0.07	2.73	0.24	BC 13
				Max V_y	-3.49	▷ 1.22	2.63	-0.04	2.40	0.32	BC 11
				Min V_y	0.70	▷ -0.11	-1.27	0.03	-1.14	-0.18	BC 14
				Max V_z	-4.18	1.13	▷ 2.99	-0.07	2.73	0.24	BC 13
				Min V_z	1.49	0.34	▷ -1.27	0.10	-1.15	0.17	BC 23
				Max M_T	1.51	0.08	-1.27	▷ 0.10	-1.14	-0.00	BC 22
				Min M_T	-2.83	0.57	2.43	▷ -0.09	2.24	0.01	BC 6
				Max M_y	-4.18	1.00	2.99	-0.07	▷ 2.73	0.15	BC 12
				Min M_y	0.68	0.15	-1.27	0.03	▷ -1.15	-0.00	BC 15
				Max M_z	-1.45	1.00	1.72	-0.02	1.57	▷ 0.35	BC 5
				Min M_z	0.70	-0.11	-1.27	0.03	-1.14	▷ -0.18	BC 14
			0.679	Max N	▷ 2.21	0.16	-1.19	0.03	-1.08	0.07	BC 20
			Rechts	Min N	▷ -4.18	1.13	2.99	-0.07	2.73	0.24	BC 13
				Max V_y	-3.49	▷ 1.22	2.63	-0.04	2.40	0.32	BC 11
				Min V_y	0.70	▷ -0.11	-1.27	0.03	-1.14	-0.18	BC 14
				Max V_z	-4.18	1.13	▷ 2.99	-0.07	2.73	0.24	BC 13
				Min V_z	1.49	0.34	▷ -1.27	0.10	-1.15	0.17	BC 23
				Max M_T	1.51	0.08	-1.27	▷ 0.10	-1.14	-0.00	BC 22
				Min M_T	-2.83	0.57	2.43	▷ -0.09	2.24	0.01	BC 6
				Max M_y	-4.18	1.00	2.99	-0.07	▷ 2.73	0.15	BC 12
				Min M_y	0.68	0.15	-1.27	0.03	▷ -1.15	-0.00	BC 15
				Max M_z	-1.45	1.00	1.72	-0.02	1.57	▷ 0.35	BC 5
				Min M_z	0.70	-0.11	-1.27	0.03	-1.14	▷ -0.18	BC 14
			0.707	Max N	▷ 2.21	0.15	-1.14	0.03	-1.12	0.06	BC 20
			Links	Min N	▷ -4.14	1.11	2.86	-0.07	2.81	0.21	BC 13
				Max V_y	-3.44	▷ 1.19	2.52	-0.04	2.47	0.29	BC 11
				Min V_y	0.70	▷ -0.11	-1.22	0.03	-1.17	-0.18	BC 14
				Max V_z	-4.14	1.11	▷ 2.86	-0.07	2.81	0.21	BC 13
				Min V_z	1.49	0.33	▷ -1.22	0.10	-1.18	0.16	BC 23
				Max M_T	1.51	0.07	-1.22	▷ 0.10	-1.18	-0.01	BC 22
				Min M_T	-2.80	0.55	2.33	▷ -0.09	2.30	-0.01	BC 6
				Max M_y	-4.13	0.97	2.86	-0.07	▷ 2.82	0.12	BC 12
				Min M_y	0.68	0.15	-1.22	0.03	▷ -1.18	-0.01	BC 15
				Max M_z	-1.42	0.98	1.65	-0.02	1.62	▷ 0.32	BC 5
				Min M_z	0.70	-0.11	-1.22	0.03	-1.17	▷ -0.18	BC 14
			0.707	Max N	▷ 2.21	0.15	-1.14	0.03	-1.12	0.06	BC 20
			Rechts	Min N	▷ -4.14	1.11	2.86	-0.07	2.81	0.21	BC 13
				Max V_y	-3.44	▷ 1.19	2.52	-0.04	2.47	0.29	BC 11
				Min V_y	0.70	▷ -0.11	-1.22	0.03	-1.17	-0.18	BC 14
				Max V_z	-4.14	1.11	▷ 2.86	-0.07	2.81	0.21	BC 13
				Min V_z	1.49	0.33	▷ -1.22	0.10	-1.18	0.16	BC 23
				Max M_T	1.51	0.07	-1.22	▷ 0.10	-1.18	-0.01	BC 22
				Min M_T	-2.80	0.55	2.33	▷ -0.09	2.30	-0.01	BC 6
				Max M_y	-4.13	0.97	2.86	-0.07	▷ 2.82	0.12	BC 12
				Min M_y	0.68	0.15	-1.22	0.03	▷ -1.18	-0.01	BC 15
				Max M_z	-1.42	0.98	1.65	-0.02	1.62	▷ 0.32	BC 5
				Min M_z	0.70	-0.11	-1.22	0.03	-1.17	▷ -0.18	BC 14
			2.552	Max N	▷ 2.47	0.11	2.19	0.04	-0.16	-0.25	BC 21
			Links	Min N	▷ -1.23	-0.61	-5.05	-0.08	0.68	-0.19	BC 12

4.12 DOORSNEDES - SNEDEKRACHTEN

Resultaatcombinaties

Staaf No.	RC	Knoop No.	Snede x [m]		Krachten [kN] N	V_y	V_z	Momenten [kNm] M_T	M_y	M_z	Bijbehorend Belastingsgeval
27	RC1			Max V_y	2.47	⊳ 0.11	2.19	0.04	-0.16	-0.25	BC 21
				Min V_y	-1.23	⊳ -0.61	-5.05	-0.08	0.68	-0.19	BC 12
				Max V_z	2.47	0.11	⊳ 2.19	0.04	-0.16	-0.25	BC 21
				Min V_z	-1.23	-0.61	⊳ -5.05	-0.08	0.68	-0.19	BC 12
				Max M_T	1.76	0.04	2.11	⊳ 0.11	-0.37	-0.18	BC 23
				Min M_T	-1.00	-0.48	-4.21	⊳ -0.09	0.51	-0.05	BC 6
				Max M_y	-1.16	-0.56	-5.00	-0.07	⊳ 0.73	-0.27	BC 13
				Min M_y	1.63	-0.07	2.01	0.11	⊳ -0.45	-0.00	BC 22
				Max M_z	0.83	-0.27	2.01	0.03	-0.44	⊳ 0.17	BC 14
				Min M_z	0.53	-0.23	-2.81	-0.03	0.50	⊳ -0.36	BC 5
			2.552	Max N	⊳ 2.47	0.11	2.19	0.04	-0.16	-0.25	BC 21
			Rechts	Min N	⊳ -1.23	-0.61	-5.05	-0.08	0.68	-0.19	BC 12
				Max V_y	2.47	⊳ 0.11	2.19	0.04	-0.16	-0.25	BC 21
				Min V_y	-1.23	⊳ -0.61	-5.05	-0.08	0.68	-0.19	BC 12
				Max V_z	2.47	0.11	⊳ 2.19	0.04	-0.16	-0.25	BC 21
				Min V_z	-1.23	-0.61	⊳ -5.05	-0.08	0.68	-0.19	BC 12
				Max M_T	1.76	0.04	2.11	⊳ 0.11	-0.37	-0.18	BC 23
				Min M_T	-1.00	-0.48	-4.21	⊳ -0.09	0.51	-0.05	BC 6
				Max M_y	-1.16	-0.56	-5.00	-0.07	⊳ 0.73	-0.27	BC 13
				Min M_y	1.63	-0.07	2.01	0.11	⊳ -0.45	-0.00	BC 22
				Max M_z	0.83	-0.27	2.01	0.03	-0.44	⊳ 0.17	BC 14
				Min M_z	0.53	-0.23	-2.81	-0.03	0.50	⊳ -0.36	BC 5
			2.581	Max N	⊳ 2.47	0.10	2.24	0.04	-0.10	-0.25	BC 21
			Links	Min N	⊳ -1.18	-0.63	-5.17	-0.08	0.54	-0.17	BC 12
				Max V_y	2.47	⊳ 0.10	2.24	0.04	-0.10	-0.25	BC 21
				Min V_y	-1.18	⊳ -0.63	-5.17	-0.08	0.54	-0.17	BC 12
				Max V_z	2.47	0.10	⊳ 2.24	0.04	-0.10	-0.25	BC 21
				Min V_z	-1.18	-0.63	⊳ -5.17	-0.08	0.54	-0.17	BC 12
				Max M_T	1.77	0.04	2.16	⊳ 0.11	-0.31	-0.18	BC 23
				Min M_T	-0.97	-0.50	-4.31	⊳ -0.09	0.39	-0.03	BC 6
				Max M_y	-1.11	-0.58	-5.11	-0.07	⊳ 0.59	-0.25	BC 13
				Min M_y	1.63	-0.07	2.06	0.11	⊳ -0.39	-0.00	BC 22
				Max M_z	0.83	-0.27	2.06	0.03	-0.39	⊳ 0.18	BC 14
				Min M_z	0.56	-0.25	-2.87	-0.03	0.42	⊳ -0.35	BC 5
			2.581	Max N	⊳ 2.47	0.10	2.24	0.04	-0.10	-0.25	BC 21
			Rechts	Min N	⊳ -1.18	-0.63	-5.17	-0.08	0.54	-0.17	BC 12
				Max V_y	2.47	⊳ 0.10	2.24	0.04	-0.10	-0.25	BC 21
				Min V_y	-1.18	⊳ -0.63	-5.17	-0.08	0.54	-0.17	BC 12
				Max V_z	2.47	0.10	⊳ 2.24	0.04	-0.10	-0.25	BC 21
				Min V_z	-1.18	-0.63	⊳ -5.17	-0.08	0.54	-0.17	BC 12
				Max M_T	1.77	0.04	2.16	⊳ 0.11	-0.31	-0.18	BC 23
				Min M_T	-0.97	-0.50	-4.31	⊳ -0.09	0.39	-0.03	BC 6
				Max M_y	-1.11	-0.58	-5.11	-0.07	⊳ 0.59	-0.25	BC 13
				Min M_y	1.63	-0.07	2.06	0.11	⊳ -0.39	-0.00	BC 22
				Max M_z	0.83	-0.27	2.06	0.03	-0.39	⊳ 0.18	BC 14
				Min M_z	0.56	-0.25	-2.87	-0.03	0.42	⊳ -0.35	BC 5
			2.677	Max N	⊳ 2.49	0.09	2.40	0.04	0.12	-0.26	BC 21
			Links	Min N	⊳ -1.05	-0.71	-5.54	-0.08	0.02	-0.10	BC 12
				Max V_y	2.49	⊳ 0.09	2.40	0.04	0.12	-0.26	BC 21
				Min V_y	-1.05	⊳ -0.71	-5.54	-0.08	0.02	-0.10	BC 12
				Max V_z	2.49	0.09	⊳ 2.40	0.04	0.12	-0.26	BC 21
				Min V_z	-1.05	-0.71	⊳ -5.54	-0.08	0.02	-0.10	BC 12
				Max M_T	1.78	0.02	2.33	⊳ 0.11	-0.09	-0.18	BC 23
				Min M_T	-0.89	-0.55	-4.62	⊳ -0.09	-0.05	0.02	BC 6
				Max M_y	0.66	-0.31	-3.08	-0.03	⊳ 0.13	-0.32	BC 5
				Min M_y	1.64	-0.08	2.22	0.11	⊳ -0.19	0.01	BC 22
				Max M_z	0.84	-0.28	2.22	0.03	-0.18	⊳ 0.21	BC 14
				Min M_z	0.66	-0.31	-3.08	-0.03	0.13	⊳ -0.32	BC 5
			2.677	Max N	⊳ 2.49	0.09	2.40	0.04	0.12	-0.26	BC 21
			Rechts	Min N	⊳ -1.05	-0.71	-5.54	-0.08	0.02	-0.10	BC 12
				Max V_y	2.49	⊳ 0.09	2.40	0.04	0.12	-0.26	BC 21
				Min V_y	-1.05	⊳ -0.71	-5.54	-0.08	0.02	-0.10	BC 12
				Max V_z	2.49	0.09	⊳ 2.40	0.04	0.12	-0.26	BC 21
				Min V_z	-1.05	-0.71	⊳ -5.54	-0.08	0.02	-0.10	BC 12
				Max M_T	1.78	0.02	2.33	⊳ 0.11	-0.09	-0.18	BC 23
				Min M_T	-0.89	-0.55	-4.62	⊳ -0.09	-0.05	0.02	BC 6
				Max M_y	0.66	-0.31	-3.08	-0.03	⊳ 0.13	-0.32	BC 5
				Min M_y	1.64	-0.08	2.22	0.11	⊳ -0.19	0.01	BC 22
				Max M_z	0.84	-0.28	2.22	0.03	-0.18	⊳ 0.21	BC 14
				Min M_z	0.66	-0.31	-3.08	-0.03	0.13	⊳ -0.32	BC 5
			3.260	Max N	⊳ 2.54	0.04	2.86	0.04	1.71	-0.29	BC 21
			Links	Min N	⊳ -0.70	-0.90	-6.54	-0.08	-3.59	0.41	BC 12
				Max V_y	2.54	⊳ 0.04	2.86	0.04	1.71	-0.29	BC 21
				Min V_y	-0.70	⊳ -0.90	-6.54	-0.08	-3.59	0.41	BC 12
				Max V_z	2.54	0.04	⊳ 2.86	0.04	1.71	-0.29	BC 21
				Min V_z	-0.70	-0.90	⊳ -6.54	-0.08	-3.59	0.41	BC 12
				Max M_T	1.83	-0.02	2.79	⊳ 0.11	1.45	-0.16	BC 23
				Min M_T	-0.66	-0.67	-5.49	⊳ -0.09	-3.07	0.41	BC 6
				Max M_y	2.54	0.04	2.86	0.04	⊳ 1.71	-0.29	BC 21
				Min M_y	-0.70	-0.90	-6.54	-0.08	⊳ -3.59	0.41	BC 12
				Max M_z	-0.70	-0.90	-6.54	-0.08	-3.59	⊳ 0.41	BC 12
				Min M_z	2.54	0.04	2.86	0.04	1.71	⊳ -0.29	BC 21
		31	3.260	Max N	⊳ 2.54	0.04	2.86	0.04	1.71	-0.29	BC 21
			Rechts	Min N	⊳ -0.70	-0.90	-6.54	-0.08	-3.59	0.41	BC 12

4.12 DOORSNEDES - SNEDEKRACHTEN

Resultaatcombinaties

Staaf No.	RC	Knoop No.	Snede x [m]		Krachten [kN] N	V_y	V_z	Momenten [kNm] M_T	M_y	M_z	Bijbehorend Belastingsgeval
27	RC1			Max V_y	2.54	▷ 0.04	2.86	0.04	1.71	-0.29	BC 21
				Min V_y	-0.70	▷ -0.90	-6.54	-0.08	-3.59	0.41	BC 12
				Max V_z	2.54	0.04	▷ 2.86	0.04	1.71	-0.29	BC 21
				Min V_z	-0.70	-0.90	▷ -6.54	-0.08	-3.59	0.41	BC 12
				Max M_T	1.83	-0.02	2.79	▷ 0.11	1.45	-0.16	BC 23
				Min M_T	-0.66	-0.67	-5.49	▷ -0.09	-3.07	0.41	BC 6
				Max M_y	2.54	0.04	2.86	0.04	▷ 1.71	-0.29	BC 21
				Min M_y	-0.70	-0.90	-6.54	-0.08	▷ -3.59	0.41	BC 12
				Max M_z	-0.70	-0.90	-6.54	-0.08	-3.59	▷ 0.41	BC 12
				Min M_z	2.54	0.04	2.86	0.04	1.71	▷ -0.29	BC 21
28	RC1	212	0.000	Max N	▷ 0.00	0.00	0.00	0.00	0.00	0.00	
			Links	Min N	▷ -4.97	1.35	4.43	0.00	-0.01	1.15	BC 12
				Max V_y	-4.76	▷ 1.60	3.84	0.02	-0.01	1.48	BC 11
				Min V_y	-0.75	▷ -0.13	-1.87	0.01	-0.00	-0.34	BC 14
				Max V_z	-4.97	1.35	▷ 4.43	0.00	-0.01	1.15	BC 12
				Min V_z	-0.39	0.31	▷ -1.93	0.03	0.00	0.30	BC 23
				Max M_T	-0.62	0.00	-1.90	▷ 0.03	-0.00	-0.09	BC 22
				Min M_T	-1.34	0.14	1.73	▷ -0.02	-0.00	0.06	BC 18
				Max M_y	-0.39	0.31	-1.93	0.03	▷ 0.00	0.30	BC 23
				Min M_y	-4.86	1.50	4.41	0.01	▷ -0.01	1.35	BC 13
				Max M_z	-4.76	1.60	3.84	0.02	-0.01	▷ 1.48	BC 11
				Min M_z	-0.75	-0.13	-1.87	0.01	-0.00	▷ -0.34	BC 14
			0.000	Max N	▷ 0.00	0.00	0.00	0.00	0.00	0.00	
			Rechts	Min N	▷ -4.97	1.35	4.43	0.00	-0.01	1.15	BC 12
				Max V_y	-4.76	▷ 1.60	3.84	0.02	-0.01	1.48	BC 11
				Min V_y	-0.75	▷ -0.13	-1.87	0.01	-0.00	-0.34	BC 14
				Max V_z	-4.97	1.35	▷ 4.43	0.00	-0.01	1.15	BC 12
				Min V_z	-0.39	0.31	▷ -1.93	0.03	0.00	0.30	BC 23
				Max M_T	-0.62	0.00	-1.90	▷ 0.03	-0.00	-0.09	BC 22
				Min M_T	-1.34	0.14	1.73	▷ -0.02	-0.00	0.06	BC 18
				Max M_y	-0.39	0.31	-1.93	0.03	▷ 0.00	0.30	BC 23
				Min M_y	-4.86	1.50	4.41	0.01	▷ -0.01	1.35	BC 13
				Max M_z	-4.76	1.60	3.84	0.02	-0.01	▷ 1.48	BC 11
				Min M_z	-0.75	-0.13	-1.87	0.01	-0.00	▷ -0.34	BC 14
			0.583	Max N	▷ 0.00	0.00	0.00	0.00	0.00	0.00	
			Links	Min N	▷ -4.56	1.14	3.25	-0.00	2.31	0.38	BC 12
				Max V_y	-4.33	▷ 1.37	2.81	0.02	2.01	0.59	BC 11
				Min V_y	-0.72	▷ -0.16	-1.43	0.01	-1.01	-0.25	BC 14
				Max V_z	-4.56	1.14	▷ 3.25	-0.00	2.31	0.38	BC 12
				Min V_z	-0.34	0.26	▷ -1.47	0.03	-1.04	0.12	BC 23
				Max M_T	-0.60	-0.02	-1.46	▷ 0.03	-1.02	-0.10	BC 22
				Min M_T	-1.29	0.11	1.26	▷ -0.02	0.91	-0.02	BC 18
				Max M_y	-4.56	1.14	3.25	-0.00	▷ 2.31	0.38	BC 12
				Min M_y	-0.34	0.26	-1.47	0.03	▷ -1.04	0.12	BC 23
				Max M_z	-4.33	1.37	2.81	0.02	2.01	▷ 0.59	BC 11
				Min M_z	-0.72	-0.16	-1.43	0.01	-1.01	▷ -0.25	BC 14
			0.583	Max N	▷ 0.00	0.00	0.00	0.00	0.00	0.00	
			Rechts	Min N	▷ -4.56	1.14	3.25	-0.00	2.31	0.38	BC 12
				Max V_y	-4.33	▷ 1.37	2.81	0.02	2.01	0.59	BC 11
				Min V_y	-0.72	▷ -0.16	-1.43	0.01	-1.01	-0.25	BC 14
				Max V_z	-4.56	1.14	▷ 3.25	-0.00	2.31	0.38	BC 12
				Min V_z	-0.34	0.26	▷ -1.47	0.03	-1.04	0.12	BC 23
				Max M_T	-0.60	-0.02	-1.46	▷ 0.03	-1.02	-0.10	BC 22
				Min M_T	-1.29	0.11	1.26	▷ -0.02	0.91	-0.02	BC 18
				Max M_y	-4.56	1.14	3.25	-0.00	▷ 2.31	0.38	BC 12
				Min M_y	-0.34	0.26	-1.47	0.03	▷ -1.04	0.12	BC 23
				Max M_z	-4.33	1.37	2.81	0.02	2.01	▷ 0.59	BC 11
				Min M_z	-0.72	-0.16	-1.43	0.01	-1.01	▷ -0.25	BC 14
			0.679	Max N	▷ 0.00	0.00	0.00	0.00	0.00	0.00	
			Links	Min N	▷ -4.43	1.06	2.87	-0.00	2.61	0.27	BC 12
				Max V_y	-4.19	▷ 1.30	2.48	0.02	2.26	0.46	BC 11
				Min V_y	-0.72	▷ -0.17	-1.27	0.01	-1.14	-0.24	BC 14
				Max V_z	-4.43	1.06	▷ 2.87	-0.00	2.61	0.27	BC 12
				Min V_z	-0.33	0.25	▷ -1.31	0.03	-1.17	0.10	BC 23
				Max M_T	-0.59	-0.03	-1.29	▷ 0.03	-1.16	-0.10	BC 22
				Min M_T	-1.28	0.10	1.11	▷ -0.02	1.02	-0.03	BC 18
				Max M_y	-4.43	1.06	2.87	-0.00	▷ 2.61	0.27	BC 12
				Min M_y	-0.33	0.25	-1.31	0.03	▷ -1.17	0.10	BC 23
				Max M_z	-2.80	1.09	1.63	0.02	1.49	▷ 0.47	BC 5
				Min M_z	-0.72	-0.17	-1.27	0.01	-1.14	▷ -0.24	BC 14
			0.679	Max N	▷ 0.00	0.00	0.00	0.00	0.00	0.00	
			Rechts	Min N	▷ -4.43	1.06	2.87	-0.00	2.61	0.27	BC 12
				Max V_y	-4.19	▷ 1.30	2.48	0.02	2.26	0.46	BC 11
				Min V_y	-0.72	▷ -0.17	-1.27	0.01	-1.14	-0.24	BC 14
				Max V_z	-4.43	1.06	▷ 2.87	-0.00	2.61	0.27	BC 12
				Min V_z	-0.33	0.25	▷ -1.31	0.03	-1.17	0.10	BC 23
				Max M_T	-0.59	-0.03	-1.29	▷ 0.03	-1.16	-0.10	BC 22
				Min M_T	-1.28	0.10	1.11	▷ -0.02	1.02	-0.03	BC 18
				Max M_y	-4.43	1.06	2.87	-0.00	▷ 2.61	0.27	BC 12
				Min M_y	-0.33	0.25	-1.31	0.03	▷ -1.17	0.10	BC 23
				Max M_z	-2.80	1.09	1.63	0.02	1.49	▷ 0.47	BC 5
				Min M_z	-0.72	-0.17	-1.27	0.01	-1.14	▷ -0.24	BC 14
			0.707	Max N	▷ 0.00	0.00	0.00	0.00	0.00	0.00	
			Links	Min N	▷ -4.39	1.04	2.75	-0.00	2.69	0.24	BC 12

4.12 DOORSNEDES - SNEDEKRACHTEN

Resultaatcombinaties

Staaf No.	RC	Knoop No.	Snede x [m]		Krachten [kN] N	V_y	V_z	Momenten [kNm] M_T	M_y	M_z	Bijbehorend Belastingsgeval
28	RC1			Max V_y	-4.15	▷ 1.27	2.38	0.02	2.33	0.42	BC 11
				Min V_y	-0.71	▷ -0.17	-1.22	0.01	-1.17	-0.23	BC 14
				Max V_z	-4.39	1.04	▷ 2.75	-0.00	2.69	0.24	BC 12
				Min V_z	-0.33	0.25	▷ -1.26	0.03	-1.21	0.09	BC 23
				Max M_T	-0.59	-0.03	-1.25	▷ 0.03	-1.19	-0.10	BC 22
				Min M_T	-1.28	0.09	1.07	▷ -0.02	1.05	-0.03	BC 18
				Max M_y	-4.39	1.04	2.75	-0.00	▷ 2.69	0.24	BC 12
				Min M_y	-0.33	0.25	-1.26	0.03	▷ -1.21	0.09	BC 23
				Max M_z	-2.77	1.08	1.57	0.02	1.53	▷ 0.44	BC 5
				Min M_z	-0.71	-0.17	-1.22	0.01	-1.17	▷ -0.23	BC 14
			0.707	Max N	▷ 0.00	0.00	0.00	0.00	0.00	0.00	
			Rechts	Min N	▷ -4.39	1.04	2.75	-0.00	2.69	0.24	BC 12
				Max V_y	-4.15	▷ 1.27	2.38	0.02	2.33	0.42	BC 11
				Min V_y	-0.71	▷ -0.17	-1.22	0.01	-1.17	-0.23	BC 14
				Max V_z	-4.39	1.04	▷ 2.75	-0.00	2.69	0.24	BC 12
				Min V_z	-0.33	0.25	▷ -1.26	0.03	-1.21	0.09	BC 23
				Max M_T	-0.59	-0.03	-1.25	▷ 0.03	-1.19	-0.10	BC 22
				Min M_T	-1.28	0.09	1.07	▷ -0.02	1.05	-0.03	BC 18
				Max M_y	-4.39	1.04	2.75	-0.00	▷ 2.69	0.24	BC 12
				Min M_y	-0.33	0.25	-1.26	0.03	▷ -1.21	0.09	BC 23
				Max M_z	-2.77	1.08	1.57	0.02	1.53	▷ 0.44	BC 5
				Min M_z	-0.71	-0.17	-1.22	0.01	-1.17	▷ -0.23	BC 14
			2.552	Max N	▷ 0.01	0.16	2.16	0.03	-0.25	-0.30	BC 21
			Links	Min N	▷ -1.69	-0.43	-4.71	-0.01	0.77	-0.30	BC 12
				Max V_y	0.01	▷ 0.16	2.16	0.03	-0.25	-0.30	BC 21
				Min V_y	-1.69	▷ -0.43	-4.71	-0.01	0.77	-0.30	BC 12
				Max V_z	0.01	0.16	▷ 2.16	0.03	-0.25	-0.30	BC 21
				Min V_z	-1.66	-0.40	▷ -4.71	-0.00	0.75	-0.33	BC 8
				Max M_T	-0.06	-0.04	2.09	▷ 0.04	-0.44	-0.10	BC 23
				Min M_T	-1.02	-0.13	-1.92	▷ -0.02	0.27	0.01	BC 18
				Max M_y	-1.48	-0.36	-4.66	-0.00	▷ 0.80	-0.40	BC 13
				Min M_y	-0.47	-0.18	2.00	0.04	▷ -0.50	0.09	BC 22
				Max M_z	-0.59	-0.33	2.03	0.01	-0.42	▷ 0.23	BC 14
				Min M_z	-0.94	-0.07	-2.63	0.01	0.49	▷ -0.48	BC 5
			2.552	Max N	▷ 0.01	0.16	2.16	0.03	-0.25	-0.30	BC 21
			Rechts	Min N	▷ -1.69	-0.43	-4.71	-0.01	0.77	-0.30	BC 12
				Max V_y	0.01	▷ 0.16	2.16	0.03	-0.25	-0.30	BC 21
				Min V_y	-1.69	▷ -0.43	-4.71	-0.01	0.77	-0.30	BC 12
				Max V_z	0.01	0.16	▷ 2.16	0.03	-0.25	-0.30	BC 21
				Min V_z	-1.66	-0.40	▷ -4.71	-0.00	0.75	-0.33	BC 8
				Max M_T	-0.06	-0.04	2.09	▷ 0.04	-0.44	-0.10	BC 23
				Min M_T	-1.02	-0.13	-1.92	▷ -0.02	0.27	0.01	BC 18
				Max M_y	-1.48	-0.36	-4.66	-0.00	▷ 0.80	-0.40	BC 13
				Min M_y	-0.47	-0.18	2.00	0.04	▷ -0.50	0.09	BC 22
				Max M_z	-0.59	-0.33	2.03	0.01	-0.42	▷ 0.23	BC 14
				Min M_z	-0.94	-0.07	-2.63	0.01	0.49	▷ -0.48	BC 5
			2.581	Max N	▷ 0.02	0.16	2.21	0.03	-0.19	-0.30	BC 21
			Links	Min N	▷ -1.65	-0.45	-4.82	-0.01	0.64	-0.29	BC 12
				Max V_y	0.02	▷ 0.16	2.21	0.03	-0.19	-0.30	BC 21
				Min V_y	-1.65	▷ -0.45	-4.82	-0.01	0.64	-0.29	BC 12
				Max V_z	0.02	0.16	▷ 2.21	0.03	-0.19	-0.30	BC 21
				Min V_z	-1.62	-0.42	▷ -4.82	-0.00	0.62	-0.32	BC 8
				Max M_T	-0.05	-0.05	2.14	▷ 0.04	-0.38	-0.09	BC 23
				Min M_T	-1.01	-0.14	-1.96	▷ -0.02	0.22	0.01	BC 18
				Max M_y	-1.44	-0.39	-4.77	-0.00	▷ 0.67	-0.39	BC 13
				Min M_y	-0.47	-0.18	2.05	0.04	▷ -0.44	0.10	BC 22
				Max M_z	-0.59	-0.34	2.08	0.01	-0.36	▷ 0.24	BC 14
				Min M_z	-0.91	-0.09	-2.69	0.01	0.42	▷ -0.47	BC 5
			2.581	Max N	▷ 0.02	0.16	2.21	0.03	-0.19	-0.30	BC 21
			Rechts	Min N	▷ -1.65	-0.45	-4.82	-0.01	0.64	-0.29	BC 12
				Max V_y	0.02	▷ 0.16	2.21	0.03	-0.19	-0.30	BC 21
				Min V_y	-1.65	▷ -0.45	-4.82	-0.01	0.64	-0.29	BC 12
				Max V_z	0.02	0.16	▷ 2.21	0.03	-0.19	-0.30	BC 21
				Min V_z	-1.62	-0.42	▷ -4.82	-0.00	0.62	-0.32	BC 8
				Max M_T	-0.05	-0.05	2.14	▷ 0.04	-0.38	-0.09	BC 23
				Min M_T	-1.01	-0.14	-1.96	▷ -0.02	0.22	0.01	BC 18
				Max M_y	-1.44	-0.39	-4.77	-0.00	▷ 0.67	-0.39	BC 13
				Min M_y	-0.47	-0.18	2.05	0.04	▷ -0.44	0.10	BC 22
				Max M_z	-0.59	-0.34	2.08	0.01	-0.36	▷ 0.24	BC 14
				Min M_z	-0.91	-0.09	-2.69	0.01	0.42	▷ -0.47	BC 5
			2.677	Max N	▷ 0.03	0.14	2.38	0.03	0.03	-0.32	BC 21
			Links	Min N	▷ -1.52	-0.52	-5.16	-0.01	0.16	-0.24	BC 12
				Max V_y	0.03	▷ 0.14	2.38	0.03	0.03	-0.32	BC 21
				Min V_y	-1.52	▷ -0.52	-5.16	-0.01	0.16	-0.24	BC 12
				Max V_z	0.03	0.14	▷ 2.38	0.03	0.03	-0.32	BC 21
				Min V_z	-1.49	-0.49	▷ -5.17	-0.00	0.14	-0.28	BC 8
				Max M_T	-0.04	-0.06	2.30	▷ 0.04	-0.17	-0.09	BC 23
				Min M_T	-1.00	-0.15	-2.11	▷ -0.02	0.02	0.03	BC 18
				Max M_y	-1.30	-0.46	-5.11	-0.00	▷ 0.19	-0.34	BC 13
				Min M_y	-0.46	-0.19	2.21	0.04	▷ -0.23	0.12	BC 22
				Max M_z	-0.58	-0.34	2.24	0.01	-0.15	▷ 0.28	BC 14
				Min M_z	-0.82	-0.14	-2.89	0.01	0.15	▷ -0.46	BC 5
			2.677	Max N	▷ 0.03	0.14	2.38	0.03	0.03	-0.32	BC 21
			Rechts	Min N	▷ -1.52	-0.52	-5.16	-0.01	0.16	-0.24	BC 12

4.12 DOORSNEDES - SNEDEKRACHTEN

Resultaatcombinaties

Staaf No.	RC	Knoop No.	Snede x [m]		Krachten [kN] N	V_y	V_z	Momenten [kNm] M_T	M_y	M_z	Bijbehorend Belastingsgeval
28	RC1			Max V_y	0.03	▷ 0.14	2.38	0.03	0.03	-0.32	BC 21
				Min V_y	-1.52	▷ -0.52	-5.16	-0.01	0.16	-0.24	BC 12
				Max V_z	0.03	0.14	▷ 2.38	0.03	0.03	-0.32	BC 21
				Min V_z	-1.49	-0.49	▷ -5.17	-0.00	0.14	-0.28	BC 8
				Max M_T	-0.04	-0.06	2.30	▷ 0.04	-0.17	-0.09	BC 23
				Min M_T	-1.00	-0.15	-2.11	▷ -0.02	0.02	0.03	BC 18
				Max M_y	-1.30	-0.46	-5.11	-0.00	▷ 0.19	-0.34	BC 13
				Min M_y	-0.46	-0.19	2.21	0.04	▷ -0.23	0.12	BC 22
				Max M_z	-0.58	-0.34	2.24	0.01	-0.15	▷ 0.28	BC 14
				Min M_z	-0.82	-0.14	-2.89	0.01	0.15	▷ -0.46	BC 5
			3.260	Max N	▷ 0.08	0.10	2.84	0.03	1.60	-0.38	BC 21
			Links	Min N	▷ -1.26	-0.52	-5.21	-0.02	-2.77	0.20	BC 6
				Max V_y	0.08	▷ 0.10	2.84	0.03	1.60	-0.38	BC 21
				Min V_y	-1.19	▷ -0.69	-6.11	-0.01	-3.22	0.15	BC 12
				Max V_z	0.08	0.10	▷ 2.84	0.03	1.60	-0.38	BC 21
				Min V_z	-1.16	-0.66	▷ -6.11	-0.00	-3.24	0.09	BC 8
				Max M_T	0.01	-0.11	2.76	▷ 0.04	1.36	-0.02	BC 23
				Min M_T	-0.95	-0.19	-2.57	▷ -0.02	-1.38	0.13	BC 18
				Max M_y	0.08	0.10	2.84	0.03	▷ 1.60	-0.38	BC 21
				Min M_y	-1.16	-0.66	-6.11	-0.00	▷ -3.24	0.09	BC 8
				Max M_z	-0.55	-0.37	2.68	0.01	1.33	▷ 0.49	BC 14
				Min M_z	-0.28	0.06	-0.80	0.01	-0.36	▷ -0.39	BC 17
		32	3.260	Max N	▷ 0.08	0.10	2.84	0.03	1.60	-0.38	BC 21
			Rechts	Min N	▷ -1.26	-0.52	-5.21	-0.02	-2.77	0.20	BC 6
				Max V_y	0.08	▷ 0.10	2.84	0.03	1.60	-0.38	BC 21
				Min V_y	-1.19	▷ -0.69	-6.11	-0.01	-3.22	0.15	BC 12
				Max V_z	0.08	0.10	▷ 2.84	0.03	1.60	-0.38	BC 21
				Min V_z	-1.16	-0.66	▷ -6.11	-0.00	-3.24	0.09	BC 8
				Max M_T	0.01	-0.11	2.76	▷ 0.04	1.36	-0.02	BC 23
				Min M_T	-0.95	-0.19	-2.57	▷ -0.02	-1.38	0.13	BC 18
				Max M_y	0.08	0.10	2.84	0.03	▷ 1.60	-0.38	BC 21
				Min M_y	-1.16	-0.66	-6.11	-0.00	▷ -3.24	0.09	BC 8
				Max M_z	-0.55	-0.37	2.68	0.01	1.33	▷ 0.49	BC 14
				Min M_z	-0.28	0.06	-0.80	0.01	-0.36	▷ -0.39	BC 17
29	RC1	214	0.000	Max N	▷ 3.13	-0.16	-1.77	-0.03	-0.00	-0.36	BC 14
			Links	Min N	▷ -15.62	1.59	3.52	0.11	-0.01	1.63	BC 11
				Max V_y	-15.62	▷ 1.59	3.52	0.11	-0.01	1.63	BC 11
				Min V_y	3.13	▷ -0.16	-1.77	-0.03	-0.00	-0.36	BC 14
				Max V_z	-14.74	1.38	▷ 4.10	0.10	-0.01	1.34	BC 12
				Min V_z	0.80	0.23	▷ -1.84	-0.04	0.00	0.18	BC 23
				Max M_T	-15.20	1.52	4.09	▷ 0.11	-0.01	1.52	BC 13
				Min M_T	1.65	-0.05	-1.80	▷ -0.04	-0.00	-0.17	BC 22
				Max M_y	0.80	0.23	-1.84	-0.04	▷ 0.00	0.18	BC 23
				Min M_y	-15.20	1.52	4.09	0.11	▷ -0.01	1.52	BC 13
				Max M_z	-15.62	1.59	3.52	0.11	-0.01	▷ 1.63	BC 11
				Min M_z	3.13	-0.16	-1.77	-0.03	-0.00	▷ -0.36	BC 14
			0.000	Max N	▷ 3.13	-0.16	-1.77	-0.03	-0.00	-0.36	BC 14
			Rechts	Min N	▷ -15.62	1.59	3.52	0.11	-0.01	1.63	BC 11
				Max V_y	-15.62	▷ 1.59	3.52	0.11	-0.01	1.63	BC 11
				Min V_y	3.13	▷ -0.16	-1.77	-0.03	-0.00	-0.36	BC 14
				Max V_z	-14.74	1.38	▷ 4.10	0.10	-0.01	1.34	BC 12
				Min V_z	0.80	0.23	▷ -1.84	-0.04	0.00	0.18	BC 23
				Max M_T	-15.20	1.52	4.09	▷ 0.11	-0.01	1.52	BC 13
				Min M_T	1.65	-0.05	-1.80	▷ -0.04	-0.00	-0.17	BC 22
				Max M_y	0.80	0.23	-1.84	-0.04	▷ 0.00	0.18	BC 23
				Min M_y	-15.20	1.52	4.09	0.11	▷ -0.01	1.52	BC 13
				Max M_z	-15.62	1.59	3.52	0.11	-0.01	▷ 1.63	BC 11
				Min M_z	3.13	-0.16	-1.77	-0.03	-0.00	▷ -0.36	BC 14
			0.583	Max N	▷ 3.15	-0.18	-1.33	-0.03	-0.95	-0.27	BC 14
			Links	Min N	▷ -15.21	1.44	2.54	0.10	1.83	0.71	BC 11
				Max V_y	-15.21	▷ 1.44	2.54	0.10	1.83	0.71	BC 11
				Min V_y	3.15	▷ -0.18	-1.33	-0.03	-0.95	-0.27	BC 14
				Max V_z	-14.36	1.23	▷ 2.97	0.10	2.13	0.54	BC 12
				Min V_z	0.85	0.19	▷ -1.39	-0.04	-0.99	0.04	BC 23
				Max M_T	-14.80	1.36	2.96	▷ 0.11	2.12	0.64	BC 13
				Min M_T	1.68	-0.07	-1.35	▷ -0.04	-0.97	-0.15	BC 22
				Max M_y	-14.73	1.26	2.97	0.10	▷ 2.13	0.57	BC 8
				Min M_y	0.85	0.19	-1.39	-0.04	▷ -0.99	0.04	BC 23
				Max M_z	-15.21	1.44	2.54	0.10	1.83	▷ 0.71	BC 11
				Min M_z	3.15	-0.18	-1.33	-0.03	-0.95	▷ -0.27	BC 14
			0.583	Max N	▷ 3.15	-0.18	-1.33	-0.03	-0.95	-0.27	BC 14
			Rechts	Min N	▷ -15.21	1.44	2.54	0.10	1.83	0.71	BC 11
				Max V_y	-15.21	▷ 1.44	2.54	0.10	1.83	0.71	BC 11
				Min V_y	3.15	▷ -0.18	-1.33	-0.03	-0.95	-0.27	BC 14
				Max V_z	-14.36	1.23	▷ 2.97	0.10	2.13	0.54	BC 12
				Min V_z	0.85	0.19	▷ -1.39	-0.04	-0.99	0.04	BC 23
				Max M_T	-14.80	1.36	2.96	▷ 0.11	2.12	0.64	BC 13
				Min M_T	1.68	-0.07	-1.35	▷ -0.04	-0.97	-0.15	BC 22
				Max M_y	-14.73	1.26	2.97	0.10	▷ 2.13	0.57	BC 8
				Min M_y	0.85	0.19	-1.39	-0.04	▷ -0.99	0.04	BC 23
				Max M_z	-15.21	1.44	2.54	0.10	1.83	▷ 0.71	BC 11
				Min M_z	3.15	-0.18	-1.33	-0.03	-0.95	▷ -0.27	BC 14
			0.679	Max N	▷ 3.16	-0.19	-1.18	-0.03	-1.07	-0.25	BC 14
			Links	Min N	▷ -15.08	1.37	2.23	0.10	2.06	0.57	BC 11

4.12 DOORSNEDES - SNEDEKRACHTEN

Resultaatcombinaties

Staaf No.	RC	Knoop No.	Snede x [m]		Krachten [kN] N	V_y	V_z	Momenten [kNm] M_T	M_y	M_z	Bijbehorend Belastingsgeval
29	RC1			Max V_y	-15.08	▷ 1.37	2.23	0.10	2.06	0.57	BC 11
				Min V_y	3.16	▷ -0.19	-1.18	-0.03	-1.07	-0.25	BC 14
				Max V_z	-14.23	1.17	▷ 2.61	0.10	2.40	0.42	BC 12
				Min V_z	0.86	0.17	▷ -1.22	-0.04	-1.11	0.02	BC 23
				Max M_T	-14.67	1.29	2.60	▷ 0.11	2.39	0.51	BC 13
				Min M_T	1.68	-0.08	-1.19	▷ -0.04	-1.09	-0.14	BC 22
				Max M_y	-14.61	1.20	2.60	0.10	▷ 2.40	0.45	BC 8
				Min M_y	0.86	0.17	-1.22	-0.04	▷ -1.11	0.02	BC 23
				Max M_z	-15.08	1.37	2.23	0.10	2.06	▷ 0.57	BC 11
				Min M_z	3.16	-0.19	-1.18	-0.03	-1.07	▷ -0.25	BC 14
			0.679	Max N	▷ 3.16	-0.19	-1.18	-0.03	-1.07	-0.25	BC 14
			Rechts	Min N	▷ -15.08	1.37	2.23	0.10	2.06	0.57	BC 11
				Max V_y	-15.08	▷ 1.37	2.23	0.10	2.06	0.57	BC 11
				Min V_y	3.16	▷ -0.19	-1.18	-0.03	-1.07	-0.25	BC 14
				Max V_z	-14.23	1.17	▷ 2.61	0.10	2.40	0.42	BC 12
				Min V_z	0.86	0.17	▷ -1.22	-0.04	-1.11	0.02	BC 23
				Max M_T	-14.67	1.29	2.60	▷ 0.11	2.39	0.51	BC 13
				Min M_T	1.68	-0.08	-1.19	▷ -0.04	-1.09	-0.14	BC 22
				Max M_y	-14.61	1.20	2.60	0.10	▷ 2.40	0.45	BC 8
				Min M_y	0.86	0.17	-1.22	-0.04	▷ -1.11	0.02	BC 23
				Max M_z	-15.08	1.37	2.23	0.10	2.06	▷ 0.57	BC 11
				Min M_z	3.16	-0.19	-1.18	-0.03	-1.07	▷ -0.25	BC 14
			0.707	Max N	▷ 3.16	-0.19	-1.13	-0.03	-1.11	-0.24	BC 14
			Links	Min N	▷ -15.04	1.35	2.14	0.10	2.12	0.53	BC 11
				Max V_y	-15.04	▷ 1.35	2.14	0.10	2.12	0.53	BC 11
				Min V_y	3.16	▷ -0.19	-1.13	-0.03	-1.11	-0.24	BC 14
				Max V_z	-14.19	1.14	▷ 2.50	0.10	2.47	0.39	BC 12
				Min V_z	0.86	0.17	▷ -1.17	-0.04	-1.15	0.02	BC 23
				Max M_T	-14.63	1.27	2.49	▷ 0.11	2.46	0.47	BC 13
				Min M_T	1.68	-0.08	-1.15	▷ -0.04	-1.12	-0.14	BC 22
				Max M_y	-14.57	1.18	2.49	0.10	▷ 2.47	0.41	BC 8
				Min M_y	0.86	0.17	-1.17	-0.04	▷ -1.15	0.02	BC 23
				Max M_z	-15.04	1.35	2.14	0.10	2.12	▷ 0.53	BC 11
				Min M_z	3.16	-0.19	-1.13	-0.03	-1.11	▷ -0.24	BC 14
			0.707	Max N	▷ 3.16	-0.19	-1.13	-0.03	-1.11	-0.24	BC 14
			Rechts	Min N	▷ -15.04	1.35	2.14	0.10	2.12	0.53	BC 11
				Max V_y	-15.04	▷ 1.35	2.14	0.10	2.12	0.53	BC 11
				Min V_y	3.16	▷ -0.19	-1.13	-0.03	-1.11	-0.24	BC 14
				Max V_z	-14.19	1.14	▷ 2.50	0.10	2.47	0.39	BC 12
				Min V_z	0.86	0.17	▷ -1.17	-0.04	-1.15	0.02	BC 23
				Max M_T	-14.63	1.27	2.49	▷ 0.11	2.46	0.47	BC 13
				Min M_T	1.68	-0.08	-1.15	▷ -0.04	-1.12	-0.14	BC 22
				Max M_y	-14.57	1.18	2.49	0.10	▷ 2.47	0.41	BC 8
				Min M_y	0.86	0.17	-1.17	-0.04	▷ -1.15	0.02	BC 23
				Max M_z	-15.04	1.35	2.14	0.10	2.12	▷ 0.53	BC 11
				Min M_z	3.16	-0.19	-1.13	-0.03	-1.11	▷ -0.24	BC 14
			2.552	Max N	▷ 3.29	-0.35	2.09	-0.03	-0.22	0.25	BC 14
			Links	Min N	▷ -12.46	-0.15	-3.95	0.10	0.33	-0.59	BC 11
				Max V_y	-6.38	▷ 0.19	-0.62	0.04	0.04	-0.38	BC 17
				Min V_y	3.29	▷ -0.35	2.09	-0.03	-0.22	0.25	BC 14
				Max V_z	-2.73	0.15	▷ 2.20	0.02	-0.18	-0.29	BC 21
				Min V_z	-12.06	-0.23	▷ -4.65	0.10	0.36	-0.48	BC 8
				Max M_T	-12.05	-0.20	-4.60	▷ 0.10	0.39	-0.53	BC 13
				Min M_T	1.80	-0.22	2.09	▷ -0.04	-0.25	0.14	BC 22
				Max M_y	-12.05	-0.20	-4.60	0.10	▷ 0.39	-0.53	BC 13
				Min M_y	1.80	-0.22	2.09	-0.04	▷ -0.25	0.14	BC 22
				Max M_z	3.29	-0.35	2.09	-0.03	-0.22	▷ 0.25	BC 14
				Min M_z	-12.46	-0.15	-3.95	0.10	0.33	▷ -0.59	BC 11
			2.552	Max N	▷ 3.29	-0.35	2.09	-0.03	-0.22	0.25	BC 14
			Rechts	Min N	▷ -12.46	-0.15	-3.95	0.10	0.33	-0.59	BC 11
				Max V_y	-6.38	▷ 0.19	-0.62	0.04	0.04	-0.38	BC 17
				Min V_y	3.29	▷ -0.35	2.09	-0.03	-0.22	0.25	BC 14
				Max V_z	-2.73	0.15	▷ 2.20	0.02	-0.18	-0.29	BC 21
				Min V_z	-12.06	-0.23	▷ -4.65	0.10	0.36	-0.48	BC 8
				Max M_T	-12.05	-0.20	-4.60	▷ 0.10	0.39	-0.53	BC 13
				Min M_T	1.80	-0.22	2.09	▷ -0.04	-0.25	0.14	BC 22
				Max M_y	-12.05	-0.20	-4.60	0.10	▷ 0.39	-0.53	BC 13
				Min M_y	1.80	-0.22	2.09	-0.04	▷ -0.25	0.14	BC 22
				Max M_z	3.29	-0.35	2.09	-0.03	-0.22	▷ 0.25	BC 14
				Min M_z	-12.46	-0.15	-3.95	0.10	0.33	▷ -0.59	BC 11
			2.581	Max N	▷ 3.29	-0.35	2.14	-0.03	-0.16	0.26	BC 14
			Links	Min N	▷ -12.42	-0.17	-4.04	0.10	0.22	-0.59	BC 11
				Max V_y	-6.37	▷ 0.19	-0.63	0.04	0.02	-0.38	BC 17
				Min V_y	3.29	▷ -0.35	2.14	-0.03	-0.16	0.26	BC 14
				Max V_z	-2.73	0.15	▷ 2.25	0.02	-0.12	-0.30	BC 21
				Min V_z	-12.02	-0.25	▷ -4.75	0.10	0.23	-0.47	BC 8
				Max M_T	-12.01	-0.22	-4.70	▷ 0.10	0.26	-0.53	BC 13
				Min M_T	1.81	-0.23	2.13	▷ -0.04	-0.20	0.15	BC 22
				Max M_y	-12.01	-0.22	-4.70	0.10	▷ 0.26	-0.53	BC 13
				Min M_y	1.81	-0.23	2.13	-0.04	▷ -0.20	0.15	BC 22
				Max M_z	3.29	-0.35	2.14	-0.03	-0.16	▷ 0.26	BC 14
				Min M_z	-12.42	-0.17	-4.04	0.10	0.22	▷ -0.59	BC 11
			2.581	Max N	▷ 3.29	-0.35	2.14	-0.03	-0.16	0.26	BC 14
			Rechts	Min N	▷ -12.42	-0.17	-4.04	0.10	0.22	-0.59	BC 11

4.12 DOORSNEDES - SNEDEKRACHTEN

Resultaatcombinaties

Staaf No.	RC	Knoop No.	Snede x [m]		Krachten [kN] N	V_y	V_z	Momenten [kNm] M_T	M_y	M_z	Bijbehorend Belastingsgeval
29	RC1			Max V_y	-6.37	▷ 0.19	-0.63	0.04	0.02	-0.38	BC 17
				Min V_y	3.29	▷ -0.35	2.14	-0.03	-0.16	0.26	BC 14
				Max V_z	-2.73	0.15	▷ 2.25	0.02	-0.12	-0.30	BC 21
				Min V_z	-12.02	-0.25	▷ -4.75	0.10	0.23	-0.47	BC 8
				Max M_T	-12.01	-0.22	-4.70	▷ 0.10	0.26	-0.53	BC 13
				Min M_T	1.81	-0.23	2.13	▷ -0.04	-0.20	0.15	BC 22
				Max M_y	-12.01	-0.22	-4.70	0.10	▷ 0.26	-0.53	BC 13
				Min M_y	1.81	-0.23	2.13	-0.04	▷ -0.20	0.15	BC 22
				Max M_z	3.29	-0.35	2.14	-0.03	-0.16	▷ 0.26	BC 14
				Min M_z	-12.42	-0.17	-4.04	0.10	0.22	▷ -0.59	BC 11
			2.677	Max N	▷ 3.30	-0.36	2.30	-0.03	0.06	0.30	BC 14
			Links	Min N	▷ -12.30	-0.24	-4.31	0.10	-0.19	-0.57	BC 11
				Max V_y	-6.35	▷ 0.17	-0.68	0.04	-0.04	-0.40	BC 17
				Min V_y	3.30	▷ -0.36	2.30	-0.03	0.06	0.30	BC 14
				Max V_z	-2.71	0.13	▷ 2.42	0.02	0.11	-0.31	BC 21
				Min V_z	-11.91	-0.31	▷ -5.07	0.09	-0.24	-0.44	BC 8
				Max M_T	-11.89	-0.30	-5.03	▷ 0.10	-0.21	-0.50	BC 13
				Min M_T	1.81	-0.23	2.29	▷ -0.04	0.02	0.17	BC 22
				Max M_y	-2.71	0.13	2.42	0.02	▷ 0.11	-0.31	BC 21
				Min M_y	-11.91	-0.31	-5.07	0.09	▷ -0.24	-0.44	BC 8
				Max M_z	3.30	-0.36	2.30	-0.03	0.06	▷ 0.30	BC 14
				Min M_z	-10.83	-0.03	-2.84	0.08	-0.13	▷ -0.58	BC 5
			2.677	Max N	▷ 3.30	-0.36	2.30	-0.03	0.06	0.30	BC 14
			Rechts	Min N	▷ -12.30	-0.24	-4.31	0.10	-0.19	-0.57	BC 11
				Max V_y	-6.35	▷ 0.17	-0.68	0.04	-0.04	-0.40	BC 17
				Min V_y	3.30	▷ -0.36	2.30	-0.03	0.06	0.30	BC 14
				Max V_z	-2.71	0.13	▷ 2.42	0.02	0.11	-0.31	BC 21
				Min V_z	-11.91	-0.31	▷ -5.07	0.09	-0.24	-0.44	BC 8
				Max M_T	-11.89	-0.30	-5.03	▷ 0.10	-0.21	-0.50	BC 13
				Min M_T	1.81	-0.23	2.29	▷ -0.04	0.02	0.17	BC 22
				Max M_y	-2.71	0.13	2.42	0.02	▷ 0.11	-0.31	BC 21
				Min M_y	-11.91	-0.31	-5.07	0.09	▷ -0.24	-0.44	BC 8
				Max M_z	3.30	-0.36	2.30	-0.03	0.06	▷ 0.30	BC 14
				Min M_z	-10.83	-0.03	-2.84	0.08	-0.13	▷ -0.58	BC 5
			3.260	Max N	▷ 3.32	-0.40	2.75	-0.03	1.58	0.52	BC 14
			Links	Min N	▷ -11.98	-0.44	-5.02	0.10	-2.98	-0.34	BC 11
				Max V_y	-6.27	▷ 0.09	-0.84	0.04	-0.50	-0.47	BC 17
				Min V_y	-11.23	▷ -0.51	-5.92	0.10	-3.52	-0.13	BC 12
				Max V_z	-2.66	0.08	▷ 2.87	0.02	1.70	-0.37	BC 21
				Min V_z	-11.61	-0.49	▷ -5.92	0.09	-3.54	-0.17	BC 8
				Max M_T	-11.58	-0.48	-5.87	▷ 0.10	-3.48	-0.24	BC 13
				Min M_T	1.84	-0.26	2.74	▷ -0.04	1.53	0.32	BC 22
				Max M_y	-2.66	0.08	2.87	0.02	▷ 1.70	-0.37	BC 21
				Min M_y	-11.61	-0.49	-5.92	0.09	▷ -3.54	-0.17	BC 8
				Max M_z	3.32	-0.40	2.75	-0.03	1.58	▷ 0.52	BC 14
				Min M_z	-10.61	-0.20	-3.33	0.08	-1.98	▷ -0.49	BC 5
		33	3.260	Max N	▷ 3.32	-0.40	2.75	-0.03	1.58	0.52	BC 14
			Rechts	Min N	▷ -11.98	-0.44	-5.02	0.10	-2.98	-0.34	BC 11
				Max V_y	-6.27	▷ 0.09	-0.84	0.04	-0.50	-0.47	BC 17
				Min V_y	-11.23	▷ -0.51	-5.92	0.10	-3.52	-0.13	BC 12
				Max V_z	-2.66	0.08	▷ 2.87	0.02	1.70	-0.37	BC 21
				Min V_z	-11.61	-0.49	▷ -5.92	0.09	-3.54	-0.17	BC 8
				Max M_T	-11.58	-0.48	-5.87	▷ 0.10	-3.48	-0.24	BC 13
				Min M_T	1.84	-0.26	2.74	▷ -0.04	1.53	0.32	BC 22
				Max M_y	-2.66	0.08	2.87	0.02	▷ 1.70	-0.37	BC 21
				Min M_y	-11.61	-0.49	-5.92	0.09	▷ -3.54	-0.17	BC 8
				Max M_z	3.32	-0.40	2.75	-0.03	1.58	▷ 0.52	BC 14
				Min M_z	-10.61	-0.20	-3.33	0.08	-1.98	▷ -0.49	BC 5
47	RC1	184	0.000	Max N	▷ 3.55	-0.38	0.39	-0.04	0.00	-0.59	BC 21
			Links	Min N	▷ -16.14	1.52	4.09	0.11	-0.01	1.58	BC 8
				Max V_y	-16.14	▷ 1.52	4.09	0.11	-0.01	1.58	BC 8
				Min V_y	3.55	▷ -0.38	0.39	-0.04	0.00	-0.59	BC 21
				Max V_z	-14.95	1.38	▷ 4.10	0.10	-0.01	1.40	BC 9
				Min V_z	1.09	0.08	▷ -1.82	-0.02	0.00	0.03	BC 14
				Max M_T	-16.14	1.52	4.09	▷ 0.11	-0.01	1.58	BC 8
				Min M_T	3.55	-0.38	0.39	▷ -0.04	0.00	-0.59	BC 21
				Max M_y	-0.28	-0.09	0.41	0.02	▷ 0.00	-0.14	BC 23
				Min M_y	-16.14	1.52	4.09	0.11	▷ -0.01	1.58	BC 8
				Max M_z	-16.14	1.52	4.09	0.11	-0.01	▷ 1.58	BC 8
				Min M_z	3.55	-0.38	0.39	-0.04	0.00	▷ -0.59	BC 21
			0.000	Max N	▷ 3.55	-0.38	0.39	-0.04	0.00	-0.59	BC 21
			Rechts	Min N	▷ -16.14	1.52	4.09	0.11	-0.01	1.58	BC 8
				Max V_y	-16.14	▷ 1.52	4.09	0.11	-0.01	1.58	BC 8
				Min V_y	3.55	▷ -0.38	0.39	-0.04	0.00	-0.59	BC 21
				Max V_z	-14.95	1.38	▷ 4.10	0.10	-0.01	1.40	BC 9
				Min V_z	1.09	0.08	▷ -1.82	-0.02	0.00	0.03	BC 14
				Max M_T	-16.14	1.52	4.09	▷ 0.11	-0.01	1.58	BC 8
				Min M_T	3.55	-0.38	0.39	▷ -0.04	0.00	-0.59	BC 21
				Max M_y	-0.28	-0.09	0.41	0.02	▷ 0.00	-0.14	BC 23
				Min M_y	-16.14	1.52	4.09	0.11	▷ -0.01	1.58	BC 8
				Max M_z	-16.14	1.52	4.09	0.11	-0.01	▷ 1.58	BC 8
				Min M_z	3.55	-0.38	0.39	-0.04	0.00	▷ -0.59	BC 21
			0.583	Max N	▷ 3.61	-0.37	0.27	-0.04	0.20	-0.37	BC 21
			Links	Min N	▷ -15.72	1.38	2.96	0.11	2.13	0.70	BC 8

4.12 DOORSNEDES - SNEDEKRACHTEN

Resultaatcombinaties

Staaf No.	RC	Knoop No.	Snede x [m]		Krachten [kN] N	V_y	V_z	Momenten [kNm] M_T	M_y	M_z	Bijbehorend Belastingsgeval
47	RC1			Max V_y	-15.72	▷ 1.38	2.96	0.11	2.13	0.70	BC 8
				Min V_y	3.61	▷ -0.37	0.27	-0.04	0.20	-0.37	BC 21
				Max V_z	-14.55	1.24	▷ 2.97	0.10	2.13	0.60	BC 9
				Min V_z	1.16	0.06	▷ -1.36	-0.02	-0.97	-0.01	BC 14
				Max M_T	-15.72	1.38	2.96	▷ 0.11	2.13	0.70	BC 8
				Min M_T	3.61	-0.37	0.27	▷ -0.04	0.20	-0.37	BC 21
				Max M_y	-14.55	1.24	2.97	0.10	▷ 2.13	0.60	BC 9
				Min M_y	1.16	0.06	-1.36	-0.02	▷ -0.97	-0.01	BC 14
				Max M_z	-15.72	1.38	2.96	0.11	2.13	▷ 0.70	BC 8
				Min M_z	3.61	-0.37	0.27	-0.04	0.20	▷ -0.37	BC 21
			0.583	Max N	▷ 3.61	-0.37	0.27	-0.04	0.20	-0.37	BC 21
			Rechts	Min N	▷ -15.72	1.38	2.96	0.11	2.13	0.70	BC 8
				Max V_y	-15.72	▷ 1.38	2.96	0.11	2.13	0.70	BC 8
				Min V_y	3.61	▷ -0.37	0.27	-0.04	0.20	-0.37	BC 21
				Max V_z	-14.55	1.24	▷ 2.97	0.10	2.13	0.60	BC 9
				Min V_z	1.16	0.06	▷ -1.36	-0.02	-0.97	-0.01	BC 14
				Max M_T	-15.72	1.38	2.96	▷ 0.11	2.13	0.70	BC 8
				Min M_T	3.61	-0.37	0.27	▷ -0.04	0.20	-0.37	BC 21
				Max M_y	-14.55	1.24	2.97	0.10	▷ 2.13	0.60	BC 9
				Min M_y	1.16	0.06	-1.36	-0.02	▷ -0.97	-0.01	BC 14
				Max M_z	-15.72	1.38	2.96	0.11	2.13	▷ 0.70	BC 8
				Min M_z	3.61	-0.37	0.27	-0.04	0.20	▷ -0.37	BC 21
			0.679	Max N	▷ 3.62	-0.37	0.24	-0.04	0.23	-0.34	BC 21
			Links	Min N	▷ -15.59	1.32	2.60	0.11	2.40	0.57	BC 8
				Max V_y	-15.59	▷ 1.32	2.60	0.11	2.40	0.57	BC 8
				Min V_y	3.62	▷ -0.37	0.24	-0.04	0.23	-0.34	BC 21
				Max V_z	-14.42	1.18	▷ 2.61	0.10	2.40	0.48	BC 9
				Min V_z	1.18	0.05	▷ -1.19	-0.02	-1.10	-0.01	BC 14
				Max M_T	-15.59	1.32	2.60	▷ 0.11	2.40	0.57	BC 8
				Min M_T	3.62	-0.37	0.24	▷ -0.04	0.23	-0.34	BC 21
				Max M_y	-14.42	1.18	2.61	0.10	▷ 2.40	0.48	BC 9
				Min M_y	1.18	0.05	-1.19	-0.02	▷ -1.10	-0.01	BC 14
				Max M_z	-15.59	1.32	2.60	0.11	2.40	▷ 0.57	BC 8
				Min M_z	3.62	-0.37	0.24	-0.04	0.23	▷ -0.34	BC 21
			0.679	Max N	▷ 3.62	-0.37	0.24	-0.04	0.23	-0.34	BC 21
			Rechts	Min N	▷ -15.59	1.32	2.60	0.11	2.40	0.57	BC 8
				Max V_y	-15.59	▷ 1.32	2.60	0.11	2.40	0.57	BC 8
				Min V_y	3.62	▷ -0.37	0.24	-0.04	0.23	-0.34	BC 21
				Max V_z	-14.42	1.18	▷ 2.61	0.10	2.40	0.48	BC 9
				Min V_z	1.18	0.05	▷ -1.19	-0.02	-1.10	-0.01	BC 14
				Max M_T	-15.59	1.32	2.60	▷ 0.11	2.40	0.57	BC 8
				Min M_T	3.62	-0.37	0.24	▷ -0.04	0.23	-0.34	BC 21
				Max M_y	-14.42	1.18	2.61	0.10	▷ 2.40	0.48	BC 9
				Min M_y	1.18	0.05	-1.19	-0.02	▷ -1.10	-0.01	BC 14
				Max M_z	-15.59	1.32	2.60	0.11	2.40	▷ 0.57	BC 8
				Min M_z	3.62	-0.37	0.24	-0.04	0.23	▷ -0.34	BC 21
			0.707	Max N	▷ 3.62	-0.37	0.23	-0.04	0.23	-0.33	BC 21
			Links	Min N	▷ -15.55	1.30	2.49	0.11	2.47	0.53	BC 8
				Max V_y	-15.55	▷ 1.30	2.49	0.11	2.47	0.53	BC 8
				Min V_y	3.62	▷ -0.37	0.23	-0.04	0.23	-0.33	BC 21
				Max V_z	-14.38	1.16	▷ 2.50	0.10	2.47	0.44	BC 9
				Min V_z	1.19	0.05	▷ -1.14	-0.02	-1.13	-0.02	BC 14
				Max M_T	-15.55	1.30	2.49	▷ 0.11	2.47	0.53	BC 8
				Min M_T	3.62	-0.37	0.23	▷ -0.04	0.23	-0.33	BC 21
				Max M_y	-14.38	1.16	2.50	0.10	▷ 2.47	0.44	BC 9
				Min M_y	1.19	0.05	-1.14	-0.02	▷ -1.13	-0.02	BC 14
				Max M_z	-15.55	1.30	2.49	0.11	2.47	▷ 0.53	BC 8
				Min M_z	3.62	-0.37	0.23	-0.04	0.23	▷ -0.33	BC 21
			0.707	Max N	▷ 3.62	-0.37	0.23	-0.04	0.23	-0.33	BC 21
			Rechts	Min N	▷ -15.55	1.30	2.49	0.11	2.47	0.53	BC 8
				Max V_y	-15.55	▷ 1.30	2.49	0.11	2.47	0.53	BC 8
				Min V_y	3.62	▷ -0.37	0.23	-0.04	0.23	-0.33	BC 21
				Max V_z	-14.38	1.16	▷ 2.50	0.10	2.47	0.44	BC 9
				Min V_z	1.19	0.05	▷ -1.14	-0.02	-1.13	-0.02	BC 14
				Max M_T	-15.55	1.30	2.49	▷ 0.11	2.47	0.53	BC 8
				Min M_T	3.62	-0.37	0.23	▷ -0.04	0.23	-0.33	BC 21
				Max M_y	-14.38	1.16	2.50	0.10	▷ 2.47	0.44	BC 9
				Min M_y	1.19	0.05	-1.14	-0.02	▷ -1.13	-0.02	BC 14
				Max M_z	-15.55	1.30	2.49	0.11	2.47	▷ 0.53	BC 8
				Min M_z	3.62	-0.37	0.23	-0.04	0.23	▷ -0.33	BC 21
			2.552	Max N	▷ 3.90	-0.36	-0.44	-0.04	0.04	0.34	BC 21
			Links	Min N	▷ -12.89	-0.10	-4.59	0.10	0.40	-0.59	BC 8
				Max V_y	-5.42	▷ 0.22	-0.59	0.02	0.06	-0.31	BC 18
				Min V_y	3.90	▷ -0.36	-0.44	-0.04	0.04	0.34	BC 21
				Max V_z	1.62	-0.08	▷ 2.22	-0.02	-0.14	0.02	BC 14
				Min V_z	-11.80	-0.15	▷ -4.63	0.10	0.39	-0.51	BC 9
				Max M_T	-12.89	-0.10	-4.59	▷ 0.10	0.40	-0.59	BC 8
				Min M_T	3.90	-0.36	-0.44	▷ -0.04	0.04	0.34	BC 21
				Max M_y	-11.56	-0.19	-4.58	0.09	▷ 0.40	-0.50	BC 10
				Min M_y	3.79	-0.20	2.13	-0.02	▷ -0.17	0.19	BC 15
				Max M_z	3.90	-0.36	-0.44	-0.04	0.04	▷ 0.34	BC 21
				Min M_z	-12.89	-0.10	-4.59	0.10	0.40	▷ -0.59	BC 8
			2.552	Max N	▷ 3.90	-0.36	-0.44	-0.04	0.04	0.34	BC 21
			Rechts	Min N	▷ -12.89	-0.10	-4.59	0.10	0.40	-0.59	BC 8

4.12 DOORSNEDES - SNEDEKRACHTEN

Resultaatcombinaties

Staaf No.	RC	Knoop No.	Snede x [m]		Krachten [kN] N	V_y	V_z	Momenten [kNm] M_T	M_y	M_z	Bijbehorend Belastingsgeval
47	RC1			Max V_y	-5.42	▷ 0.22	-0.59	0.02	0.06	-0.31	BC 18
				Min V_y	3.90	▷ -0.36	-0.44	-0.04	0.04	0.34	BC 21
				Max V_z	1.62	-0.08	▷ 2.22	-0.02	-0.14	0.02	BC 14
				Min V_z	-11.80	-0.15	▷ -4.63	0.10	0.39	-0.51	BC 9
				Max M_T	-12.89	-0.10	-4.59	▷ 0.10	0.40	-0.59	BC 8
				Min M_T	3.90	-0.36	-0.44	▷ -0.04	0.04	0.34	BC 21
				Max M_y	-11.56	-0.19	-4.58	0.09	▷ 0.40	-0.50	BC 10
				Min M_y	3.79	-0.20	2.13	-0.02	▷ -0.17	0.19	BC 15
				Max M_z	3.90	-0.36	-0.44	-0.04	0.04	▷ 0.34	BC 21
				Min M_z	-12.89	-0.10	-4.59	0.10	0.40	▷ -0.59	BC 8
			2.581	Max N	▷ 3.91	-0.36	-0.45	-0.04	0.02	0.35	BC 21
			Links	Min N	▷ -12.85	-0.12	-4.70	0.10	0.27	-0.59	BC 8
				Max V_y	-5.41	▷ 0.21	-0.60	0.02	0.05	-0.32	BC 18
				Min V_y	3.91	▷ -0.36	-0.45	-0.04	0.02	0.35	BC 21
				Max V_z	1.63	-0.08	▷ 2.27	-0.02	-0.07	0.02	BC 14
				Min V_z	-11.76	-0.17	▷ -4.73	0.10	0.26	-0.50	BC 9
				Max M_T	-12.85	-0.12	-4.70	▷ 0.10	0.27	-0.59	BC 8
				Min M_T	3.91	-0.36	-0.45	▷ -0.04	0.02	0.35	BC 21
				Max M_y	-11.52	-0.21	-4.68	0.09	▷ 0.27	-0.49	BC 10
				Min M_y	3.80	-0.20	2.18	-0.02	▷ -0.11	0.20	BC 15
				Max M_z	3.91	-0.36	-0.45	-0.04	0.02	▷ 0.35	BC 21
				Min M_z	-12.85	-0.12	-4.70	0.10	0.27	▷ -0.59	BC 8
			2.581	Max N	▷ 3.91	-0.36	-0.45	-0.04	0.02	0.35	BC 21
			Rechts	Min N	▷ -12.85	-0.12	-4.70	0.10	0.27	-0.59	BC 8
				Max V_y	-5.41	▷ 0.21	-0.60	0.02	0.05	-0.32	BC 18
				Min V_y	3.91	▷ -0.36	-0.45	-0.04	0.02	0.35	BC 21
				Max V_z	1.63	-0.08	▷ 2.27	-0.02	-0.07	0.02	BC 14
				Min V_z	-11.76	-0.17	▷ -4.73	0.10	0.26	-0.50	BC 9
				Max M_T	-12.85	-0.12	-4.70	▷ 0.10	0.27	-0.59	BC 8
				Min M_T	3.91	-0.36	-0.45	▷ -0.04	0.02	0.35	BC 21
				Max M_y	-11.52	-0.21	-4.68	0.09	▷ 0.27	-0.49	BC 10
				Min M_y	3.80	-0.20	2.18	-0.02	▷ -0.11	0.20	BC 15
				Max M_z	3.91	-0.36	-0.45	-0.04	0.02	▷ 0.35	BC 21
				Min M_z	-12.85	-0.12	-4.70	0.10	0.27	▷ -0.59	BC 8
			2.677	Max N	▷ 3.92	-0.36	-0.49	-0.04	-0.02	0.39	BC 21
			Links	Min N	▷ -12.73	-0.19	-5.02	0.10	-0.20	-0.57	BC 8
				Max V_y	-5.38	▷ 0.20	-0.65	0.02	-0.01	-0.34	BC 18
				Min V_y	3.92	▷ -0.36	-0.49	-0.04	-0.02	0.39	BC 21
				Max V_z	1.65	-0.09	▷ 2.43	-0.02	0.15	0.03	BC 14
				Min V_z	-11.64	-0.23	▷ -5.05	0.10	-0.22	-0.48	BC 9
				Max M_T	-12.73	-0.19	-5.02	▷ 0.10	-0.20	-0.57	BC 8
				Min M_T	3.92	-0.36	-0.49	▷ -0.04	-0.02	0.39	BC 21
				Max M_y	1.65	-0.09	2.43	-0.02	▷ 0.15	0.03	BC 14
				Min M_y	-11.64	-0.23	-5.05	0.10	▷ -0.22	-0.48	BC 9
				Max M_z	3.92	-0.36	-0.49	-0.04	-0.02	▷ 0.39	BC 21
				Min M_z	-11.70	0.07	-4.25	0.09	-0.15	▷ -0.59	BC 2
			2.677	Max N	▷ 3.92	-0.36	-0.49	-0.04	-0.02	0.39	BC 21
			Rechts	Min N	▷ -12.73	-0.19	-5.02	0.10	-0.20	-0.57	BC 8
				Max V_y	-5.38	▷ 0.20	-0.65	0.02	-0.01	-0.34	BC 18
				Min V_y	3.92	▷ -0.36	-0.49	-0.04	-0.02	0.39	BC 21
				Max V_z	1.65	-0.09	▷ 2.43	-0.02	0.15	0.03	BC 14
				Min V_z	-11.64	-0.23	▷ -5.05	0.10	-0.22	-0.48	BC 9
				Max M_T	-12.73	-0.19	-5.02	▷ 0.10	-0.20	-0.57	BC 8
				Min M_T	3.92	-0.36	-0.49	▷ -0.04	-0.02	0.39	BC 21
				Max M_y	1.65	-0.09	2.43	-0.02	▷ 0.15	0.03	BC 14
				Min M_y	-11.64	-0.23	-5.05	0.10	▷ -0.22	-0.48	BC 9
				Max M_z	3.92	-0.36	-0.49	-0.04	-0.02	▷ 0.39	BC 21
				Min M_z	-11.70	0.07	-4.25	0.09	-0.15	▷ -0.59	BC 2
			3.260	Max N	▷ 3.97	-0.37	-0.61	-0.04	-0.35	0.60	BC 21
			Links	Min N	▷ -12.40	-0.37	-5.86	0.10	-3.46	-0.38	BC 8
				Max V_y	-5.29	▷ 0.15	-0.81	0.02	-0.45	-0.44	BC 18
				Min V_y	-10.45	▷ -0.49	-5.03	0.08	-2.98	-0.17	BC 1
				Max V_z	1.72	-0.12	▷ 2.90	-0.02	1.76	0.09	BC 14
				Min V_z	-11.33	-0.40	▷ -5.90	0.10	-3.50	-0.27	BC 9
				Max M_T	-12.40	-0.37	-5.86	▷ 0.10	-3.46	-0.38	BC 8
				Min M_T	3.97	-0.37	-0.61	▷ -0.04	-0.35	0.60	BC 21
				Max M_y	1.72	-0.12	2.90	-0.02	▷ 1.76	0.09	BC 14
				Min M_y	-11.33	-0.40	-5.90	0.10	▷ -3.50	-0.27	BC 9
				Max M_z	3.97	-0.37	-0.61	-0.04	-0.35	▷ 0.60	BC 21
				Min M_z	-11.46	-0.07	-5.01	0.09	-2.93	▷ -0.57	BC 2
		58	3.260	Max N	▷ 3.97	-0.37	-0.61	-0.04	-0.35	0.60	BC 21
			Rechts	Min N	▷ -12.40	-0.37	-5.86	0.10	-3.46	-0.38	BC 8
				Max V_y	-5.29	▷ 0.15	-0.81	0.02	-0.45	-0.44	BC 18
				Min V_y	-10.45	▷ -0.49	-5.03	0.08	-2.98	-0.17	BC 1
				Max V_z	1.72	-0.12	▷ 2.90	-0.02	1.76	0.09	BC 14
				Min V_z	-11.33	-0.40	▷ -5.90	0.10	-3.50	-0.27	BC 9
				Max M_T	-12.40	-0.37	-5.86	▷ 0.10	-3.46	-0.38	BC 8
				Min M_T	3.97	-0.37	-0.61	▷ -0.04	-0.35	0.60	BC 21
				Max M_y	1.72	-0.12	2.90	-0.02	▷ 1.76	0.09	BC 14
				Min M_y	-11.33	-0.40	-5.90	0.10	▷ -3.50	-0.27	BC 9
				Max M_z	3.97	-0.37	-0.61	-0.04	-0.35	▷ 0.60	BC 21
				Min M_z	-11.46	-0.07	-5.01	0.09	-2.93	▷ -0.57	BC 2
48	RC1	182	0.000	Max N	▷ 0.00	0.00	0.00	0.00	0.00	0.00	
			Links	Min N	▷ -5.28	1.44	4.40	0.00	-0.01	1.29	BC 10

4.12 DOORSNEDES - SNEDEKRACHTEN

Resultaatcombinaties

Staaf No.	RC	Knoop No.	Snede x [m]		Krachten [kN] N	V_y	V_z	Momenten [kNm] M_T	M_y	M_z	Bijbehorend Belastingsgeval
48	RC1			Max V_y	-5.18	▷ 1.53	3.83	0.02	-0.01	1.43	BC 12
				Min V_y	-0.92	▷ -0.36	0.37	-0.03	0.00	-0.58	BC 21
				Max V_z	-4.87	1.37	▷ 4.43	0.01	-0.01	1.23	BC 9
				Min V_z	-1.33	0.14	▷ -1.88	0.01	0.00	0.13	BC 14
				Max M_T	-5.18	1.53	3.83	▷ 0.02	-0.01	1.43	BC 12
				Min M_T	-0.92	-0.36	0.37	▷ -0.03	0.00	-0.58	BC 21
				Max M_y	-0.86	-0.15	0.44	-0.03	▷ 0.00	-0.23	BC 23
				Min M_y	-5.23	1.52	4.41	0.01	▷ -0.01	1.44	BC 8
				Max M_z	-5.23	1.52	4.41	0.01	-0.01	▷ 1.44	BC 8
				Min M_z	-0.92	-0.36	0.37	-0.03	0.00	▷ -0.58	BC 21
			0.000	Max N	▷ 0.00	0.00	0.00	0.00	0.00	0.00	
			Rechts	Min N	▷ -5.28	1.44	4.40	0.00	-0.01	1.29	BC 10
				Max V_y	-5.18	▷ 1.53	3.83	0.02	-0.01	1.43	BC 12
				Min V_y	-0.92	▷ -0.36	0.37	-0.03	0.00	-0.58	BC 21
				Max V_z	-4.87	1.37	▷ 4.43	0.01	-0.01	1.23	BC 9
				Min V_z	-1.33	0.14	▷ -1.88	0.01	0.00	0.13	BC 14
				Max M_T	-5.18	1.53	3.83	▷ 0.02	-0.01	1.43	BC 12
				Min M_T	-0.92	-0.36	0.37	▷ -0.03	0.00	-0.58	BC 21
				Max M_y	-0.86	-0.15	0.44	-0.03	▷ 0.00	-0.23	BC 23
				Min M_y	-5.23	1.52	4.41	0.01	▷ -0.01	1.44	BC 8
				Max M_z	-5.23	1.52	4.41	0.01	-0.01	▷ 1.44	BC 8
				Min M_z	-0.92	-0.36	0.37	-0.03	0.00	▷ -0.58	BC 21
			0.583	Max N	▷ 0.00	0.00	0.00	0.00	0.00	0.00	
			Links	Min N	▷ -4.84	1.23	3.23	0.00	2.30	0.48	BC 10
				Max V_y	-4.79	▷ 1.32	3.24	0.01	2.31	0.58	BC 8
				Min V_y	-0.87	▷ -0.36	0.25	-0.03	0.19	-0.37	BC 21
				Max V_z	-4.45	1.17	▷ 3.25	0.01	2.32	0.46	BC 9
				Min V_z	-1.26	0.12	▷ -1.42	0.01	-1.01	0.05	BC 14
				Max M_T	-3.71	1.04	1.83	▷ 0.02	1.32	0.56	BC 6
				Min M_T	-0.87	-0.36	0.25	▷ -0.03	0.19	-0.37	BC 21
				Max M_y	-4.45	1.17	3.25	0.01	▷ 2.32	0.46	BC 9
				Min M_y	-1.26	0.12	-1.42	0.01	▷ -1.01	0.05	BC 14
				Max M_z	-4.79	1.32	3.24	0.01	2.31	▷ 0.58	BC 8
				Min M_z	-0.87	-0.36	0.25	-0.03	0.19	▷ -0.37	BC 21
			0.583	Max N	▷ 0.00	0.00	0.00	0.00	0.00	0.00	
			Rechts	Min N	▷ -4.84	1.23	3.23	0.00	2.30	0.48	BC 10
				Max V_y	-4.79	▷ 1.32	3.24	0.01	2.31	0.58	BC 8
				Min V_y	-0.87	▷ -0.36	0.25	-0.03	0.19	-0.37	BC 21
				Max V_z	-4.45	1.17	▷ 3.25	0.01	2.32	0.46	BC 9
				Min V_z	-1.26	0.12	▷ -1.42	0.01	-1.01	0.05	BC 14
				Max M_T	-3.71	1.04	1.83	▷ 0.02	1.32	0.56	BC 6
				Min M_T	-0.87	-0.36	0.25	▷ -0.03	0.19	-0.37	BC 21
				Max M_y	-4.45	1.17	3.25	0.01	▷ 2.32	0.46	BC 9
				Min M_y	-1.26	0.12	-1.42	0.01	▷ -1.01	0.05	BC 14
				Max M_z	-4.79	1.32	3.24	0.01	2.31	▷ 0.58	BC 8
				Min M_z	-0.87	-0.36	0.25	-0.03	0.19	▷ -0.37	BC 21
			0.679	Max N	▷ 0.00	0.00	0.00	0.00	0.00	0.00	
			Links	Min N	▷ -4.70	1.16	2.85	0.00	2.60	0.37	BC 10
				Max V_y	-4.65	▷ 1.25	2.87	0.01	2.60	0.45	BC 8
				Min V_y	-0.85	▷ -0.36	0.21	-0.03	0.21	-0.34	BC 21
				Max V_z	-4.31	1.10	▷ 2.87	0.01	2.61	0.35	BC 9
				Min V_z	-1.24	0.11	▷ -1.25	0.01	-1.14	0.04	BC 14
				Max M_T	-3.61	0.99	1.62	▷ 0.02	1.48	0.46	BC 6
				Min M_T	-0.85	-0.36	0.21	▷ -0.03	0.21	-0.34	BC 21
				Max M_y	-4.31	1.10	2.87	0.01	▷ 2.61	0.35	BC 9
				Min M_y	-1.24	0.11	-1.25	0.01	▷ -1.14	0.04	BC 14
				Max M_z	-3.72	1.00	2.39	0.00	2.17	▷ 0.47	BC 2
				Min M_z	-0.85	-0.36	0.21	-0.03	0.21	▷ -0.34	BC 21
			0.679	Max N	▷ 0.00	0.00	0.00	0.00	0.00	0.00	
			Rechts	Min N	▷ -4.70	1.16	2.85	0.00	2.60	0.37	BC 10
				Max V_y	-4.65	▷ 1.25	2.87	0.01	2.60	0.45	BC 8
				Min V_y	-0.85	▷ -0.36	0.21	-0.03	0.21	-0.34	BC 21
				Max V_z	-4.31	1.10	▷ 2.87	0.01	2.61	0.35	BC 9
				Min V_z	-1.24	0.11	▷ -1.25	0.01	-1.14	0.04	BC 14
				Max M_T	-3.61	0.99	1.62	▷ 0.02	1.48	0.46	BC 6
				Min M_T	-0.85	-0.36	0.21	▷ -0.03	0.21	-0.34	BC 21
				Max M_y	-4.31	1.10	2.87	0.01	▷ 2.61	0.35	BC 9
				Min M_y	-1.24	0.11	-1.25	0.01	▷ -1.14	0.04	BC 14
				Max M_z	-3.72	1.00	2.39	0.00	2.17	▷ 0.47	BC 2
				Min M_z	-0.85	-0.36	0.21	-0.03	0.21	▷ -0.34	BC 21
			0.707	Max N	▷ 0.00	0.00	0.00	0.00	0.00	0.00	
			Links	Min N	▷ -4.66	1.13	2.74	0.00	2.67	0.33	BC 10
				Max V_y	-4.61	▷ 1.22	2.75	0.01	2.68	0.42	BC 8
				Min V_y	-0.85	▷ -0.36	0.20	-0.03	0.22	-0.33	BC 21
				Max V_z	-4.27	1.08	▷ 2.75	0.01	2.69	0.32	BC 9
				Min V_z	-1.23	0.11	▷ -1.20	0.01	-1.18	0.04	BC 14
				Max M_T	-3.58	0.97	1.56	▷ 0.02	1.53	0.43	BC 6
				Min M_T	-0.85	-0.36	0.20	▷ -0.03	0.22	-0.33	BC 21
				Max M_y	-4.27	1.08	2.75	0.01	▷ 2.69	0.32	BC 9
				Min M_y	-1.23	0.11	-1.20	0.01	▷ -1.18	0.04	BC 14
				Max M_z	-3.69	0.98	2.30	0.00	2.24	▷ 0.44	BC 2
				Min M_z	-0.85	-0.36	0.20	-0.03	0.22	▷ -0.33	BC 21
			0.707	Max N	▷ 0.00	0.00	0.00	0.00	0.00	0.00	
			Rechts	Min N	▷ -4.66	1.13	2.74	0.00	2.67	0.33	BC 10

4.12 DOORSNEDES - SNEDEKRACHTEN

Resultaatcombinaties

Staaf No.	RC	Knoop No.	Snede x [m]		Krachten [kN] N	V_y	V_z	Momenten [kNm] M_T	M_y	M_z	Bijbehorend Belastingsgeval
48	RC1			Max V_y	-4.61	▷ 1.22	2.75	0.01	2.68	0.42	BC 8
				Min V_y	-0.85	▷ -0.36	0.20	-0.03	0.22	-0.33	BC 21
				Max V_z	-4.27	1.08	▷ 2.75	0.01	2.69	0.32	BC 9
				Min V_z	-1.23	0.11	▷ -1.20	0.01	-1.18	0.04	BC 14
				Max M_T	-3.58	0.97	1.56	▷ 0.02	1.53	0.43	BC 6
				Min M_T	-0.85	-0.36	0.20	▷ -0.03	0.22	-0.33	BC 21
				Max M_y	-4.27	1.08	2.75	0.01	▷ 2.69	0.32	BC 9
				Min M_y	-1.23	0.11	-1.20	0.01	▷ -1.18	0.04	BC 14
				Max M_z	-3.69	0.98	2.30	0.00	2.24	▷ 0.44	BC 2
				Min M_z	-0.85	-0.36	0.20	-0.03	0.22	▷ -0.33	BC 21
			2.552	Max N	▷ 0.00	0.00	0.00	0.00	0.00	0.00	
			Links	Min N	▷ -1.80	-0.33	-4.65	-0.01	0.80	-0.39	BC 10
				Max V_y	-1.04	▷ 0.22	-0.56	0.01	0.13	-0.31	BC 18
				Min V_y	-1.54	▷ -0.40	-4.70	-0.01	0.77	-0.29	BC 11
				Max V_z	-0.80	-0.02	▷ 2.17	0.01	-0.28	-0.04	BC 14
				Min V_z	-1.54	-0.40	▷ -4.70	-0.01	0.77	-0.29	BC 11
				Max M_T	-1.59	-0.01	-2.62	▷ 0.01	0.49	-0.45	BC 6
				Min M_T	-0.57	-0.35	-0.47	▷ -0.03	-0.03	0.33	BC 21
				Max M_y	-1.76	-0.24	-4.64	0.00	▷ 0.83	-0.47	BC 8
				Min M_y	-0.26	-0.16	2.08	0.01	▷ -0.33	0.16	BC 15
				Max M_z	-0.57	-0.35	-0.47	-0.03	-0.03	▷ 0.33	BC 21
				Min M_z	-1.71	0.03	-3.85	0.00	0.74	▷ -0.48	BC 2
			2.552	Max N	▷ 0.00	0.00	0.00	0.00	0.00	0.00	
			Rechts	Min N	▷ -1.80	-0.33	-4.65	-0.01	0.80	-0.39	BC 10
				Max V_y	-1.04	▷ 0.22	-0.56	0.01	0.13	-0.31	BC 18
				Min V_y	-1.54	▷ -0.40	-4.70	-0.01	0.77	-0.29	BC 11
				Max V_z	-0.80	-0.02	▷ 2.17	0.01	-0.28	-0.04	BC 14
				Min V_z	-1.54	-0.40	▷ -4.70	-0.01	0.77	-0.29	BC 11
				Max M_T	-1.59	-0.01	-2.62	▷ 0.01	0.49	-0.45	BC 6
				Min M_T	-0.57	-0.35	-0.47	▷ -0.03	-0.03	0.33	BC 21
				Max M_y	-1.76	-0.24	-4.64	0.00	▷ 0.83	-0.47	BC 8
				Min M_y	-0.26	-0.16	2.08	0.01	▷ -0.33	0.16	BC 15
				Max M_z	-0.57	-0.35	-0.47	-0.03	-0.03	▷ 0.33	BC 21
				Min M_z	-1.71	0.03	-3.85	0.00	0.74	▷ -0.48	BC 2
			2.581	Max N	▷ 0.00	0.00	0.00	0.00	0.00	0.00	
			Links	Min N	▷ -1.77	-0.17	-3.97	-0.02	0.57	-0.31	BC 4
				Max V_y	-1.03	▷ 0.22	-0.57	0.01	0.12	-0.31	BC 18
				Min V_y	-1.50	▷ -0.42	-4.81	-0.01	0.63	-0.28	BC 11
				Max V_z	-0.79	-0.02	▷ 2.22	0.01	-0.21	-0.04	BC 14
				Min V_z	-1.50	-0.42	▷ -4.81	-0.01	0.63	-0.28	BC 11
				Max M_T	-1.56	-0.02	-2.68	▷ 0.01	0.41	-0.45	BC 6
				Min M_T	-0.57	-0.35	-0.48	▷ -0.03	-0.05	0.34	BC 21
				Max M_y	-1.71	-0.27	-4.75	0.00	▷ 0.70	-0.46	BC 8
				Min M_y	-0.25	-0.16	2.13	0.01	▷ -0.27	0.16	BC 15
				Max M_z	-0.57	-0.35	-0.48	-0.03	-0.05	▷ 0.34	BC 21
				Min M_z	-1.68	0.01	-3.94	0.00	0.63	▷ -0.48	BC 2
			2.581	Max N	▷ 0.00	0.00	0.00	0.00	0.00	0.00	
			Rechts	Min N	▷ -1.77	-0.17	-3.97	-0.02	0.57	-0.31	BC 4
				Max V_y	-1.03	▷ 0.22	-0.57	0.01	0.12	-0.31	BC 18
				Min V_y	-1.50	▷ -0.42	-4.81	-0.01	0.63	-0.28	BC 11
				Max V_z	-0.79	-0.02	▷ 2.22	0.01	-0.21	-0.04	BC 14
				Min V_z	-1.50	-0.42	▷ -4.81	-0.01	0.63	-0.28	BC 11
				Max M_T	-1.56	-0.02	-2.68	▷ 0.01	0.41	-0.45	BC 6
				Min M_T	-0.57	-0.35	-0.48	▷ -0.03	-0.05	0.34	BC 21
				Max M_y	-1.71	-0.27	-4.75	0.00	▷ 0.70	-0.46	BC 8
				Min M_y	-0.25	-0.16	2.13	0.01	▷ -0.27	0.16	BC 15
				Max M_z	-0.57	-0.35	-0.48	-0.03	-0.05	▷ 0.34	BC 21
				Min M_z	-1.68	0.01	-3.94	0.00	0.63	▷ -0.48	BC 2
			2.677	Max N	▷ 0.00	0.00	0.00	0.00	0.00	0.00	
			Links	Min N	▷ -1.68	-0.21	-4.26	-0.02	0.17	-0.29	BC 4
				Max V_y	-1.00	▷ 0.21	-0.62	0.01	0.06	-0.33	BC 18
				Min V_y	-1.36	▷ -0.48	-5.15	-0.01	0.15	-0.23	BC 11
				Max V_z	-0.77	-0.03	▷ 2.39	0.01	0.01	-0.04	BC 14
				Min V_z	-1.36	-0.48	▷ -5.15	-0.01	0.15	-0.23	BC 11
				Max M_T	-1.47	-0.07	-2.87	▷ 0.01	0.15	-0.45	BC 6
				Min M_T	-0.55	-0.35	-0.52	▷ -0.03	-0.09	0.37	BC 21
				Max M_y	-1.58	-0.03	-4.23	0.00	▷ 0.23	-0.48	BC 2
				Min M_y	-0.55	-0.35	-0.52	-0.03	▷ -0.09	0.37	BC 21
				Max M_z	-0.55	-0.35	-0.52	-0.03	-0.09	▷ 0.37	BC 21
				Min M_z	-1.58	-0.03	-4.23	0.00	0.23	▷ -0.48	BC 2
			2.677	Max N	▷ 0.00	0.00	0.00	0.00	0.00	0.00	
			Rechts	Min N	▷ -1.68	-0.21	-4.26	-0.02	0.17	-0.29	BC 4
				Max V_y	-1.00	▷ 0.21	-0.62	0.01	0.06	-0.33	BC 18
				Min V_y	-1.36	▷ -0.48	-5.15	-0.01	0.15	-0.23	BC 11
				Max V_z	-0.77	-0.03	▷ 2.39	0.01	0.01	-0.04	BC 14
				Min V_z	-1.36	-0.48	▷ -5.15	-0.01	0.15	-0.23	BC 11
				Max M_T	-1.47	-0.07	-2.87	▷ 0.01	0.14	-0.45	BC 6
				Min M_T	-0.55	-0.35	-0.52	▷ -0.03	-0.09	0.37	BC 21
				Max M_y	-1.58	-0.03	-4.23	0.00	▷ 0.23	-0.48	BC 2
				Min M_y	-0.55	-0.35	-0.52	-0.03	▷ -0.09	0.37	BC 21
				Max M_z	-0.55	-0.35	-0.52	-0.03	-0.09	▷ 0.37	BC 21
				Min M_z	-1.58	-0.03	-4.23	0.00	0.23	▷ -0.48	BC 2
			3.260	Max N	▷ 0.00	0.00	0.00	0.00	0.00	0.00	
			Links	Min N	▷ -1.42	-0.34	-5.08	-0.02	-2.63	-0.10	BC 4

4.12 DOORSNEDES - SNEDEKRACHTEN

Resultaatcombinaties

Staaf No.	RC	Knoop No.	Snede x [m]		Krachten [kN] N	V_y	V_z	Momenten [kNm] M_T	M_y	M_z	Bijbehorend Belastingsgeval
48	RC1			Max V_y	-0.90	▷ 0.17	-0.78	0.01	-0.36	-0.44	BC 18
				Min V_y	-1.03	▷ -0.65	-6.09	-0.01	-3.22	0.13	BC 11
				Max V_z	-0.70	-0.05	▷ 2.85	0.01	1.58	-0.01	BC 14
				Min V_z	-1.03	-0.65	▷ -6.09	-0.01	-3.22	0.13	BC 11
				Max M_T	-1.21	-0.20	-3.41	▷ 0.01	-1.74	-0.36	BC 6
				Min M_T	-0.50	-0.35	-0.64	▷ -0.03	-0.44	0.58	BC 21
				Max M_y	-0.70	-0.05	2.85	0.01	▷ 1.58	-0.01	BC 14
				Min M_y	-1.03	-0.65	-6.09	-0.01	▷ -3.22	0.13	BC 11
				Max M_z	-0.50	-0.35	-0.64	-0.03	-0.44	▷ 0.58	BC 21
				Min M_z	-0.90	0.17	-0.78	0.01	-0.36	▷ -0.44	BC 18
		57	3.260	Max N	▷ 0.00	0.00	0.00	0.00	0.00	0.00	
			Rechts	Min N	▷ -1.42	-0.34	-5.08	-0.02	-2.63	-0.10	BC 4
				Max V_y	-0.90	▷ 0.17	-0.78	0.01	-0.36	-0.44	BC 18
				Min V_y	-1.03	▷ -0.65	-6.09	-0.01	-3.22	0.13	BC 11
				Max V_z	-0.70	-0.05	▷ 2.85	0.01	1.58	-0.01	BC 14
				Min V_z	-1.03	-0.65	▷ -6.09	-0.01	-3.22	0.13	BC 11
				Max M_T	-1.21	-0.20	-3.41	▷ 0.01	-1.74	-0.36	BC 6
				Min M_T	-0.50	-0.35	-0.64	▷ -0.03	-0.44	0.58	BC 21
				Max M_y	-0.70	-0.05	2.85	0.01	▷ 1.58	-0.01	BC 14
				Min M_y	-1.03	-0.65	-6.09	-0.01	▷ -3.22	0.13	BC 11
				Max M_z	-0.50	-0.35	-0.64	-0.03	-0.44	▷ 0.58	BC 21
				Min M_z	-0.90	0.17	-0.78	0.01	-0.36	▷ -0.44	BC 18
49	RC1	180	0.000	Max N	▷ 0.43	-0.14	-1.84	0.02	0.00	-0.23	BC 15
			Links	Min N	▷ -5.50	1.41	4.63	-0.05	-0.00	1.14	BC 10
				Max V_y	-4.81	▷ 1.50	4.07	-0.02	-0.00	1.28	BC 12
				Min V_y	-1.58	▷ -0.28	0.34	-0.02	0.00	-0.46	BC 21
				Max V_z	-4.68	1.32	▷ 4.65	-0.05	-0.00	1.06	BC 9
				Min V_z	-0.45	0.15	▷ -1.86	0.02	0.00	0.15	BC 14
				Max M_T	0.43	-0.14	-1.84	▷ 0.02	0.00	-0.23	BC 15
				Min M_T	-0.88	-0.21	0.41	▷ -0.09	0.00	-0.34	BC 23
				Max M_y	-0.88	-0.21	0.41	-0.09	▷ 0.00	-0.34	BC 23
				Min M_y	-4.68	1.32	4.65	-0.05	▷ -0.00	1.06	BC 9
				Max M_z	-4.81	1.50	4.07	-0.02	-0.00	▷ 1.28	BC 12
				Min M_z	-1.58	-0.28	0.34	-0.02	0.00	▷ -0.46	BC 21
			0.000	Max N	▷ 0.43	-0.14	-1.84	0.02	0.00	-0.23	BC 15
			Rechts	Min N	▷ -5.50	1.41	4.63	-0.05	-0.00	1.14	BC 10
				Max V_y	-4.81	▷ 1.50	4.07	-0.02	-0.00	1.28	BC 12
				Min V_y	-1.58	▷ -0.28	0.34	-0.02	0.00	-0.46	BC 21
				Max V_z	-4.68	1.32	▷ 4.65	-0.05	-0.00	1.06	BC 9
				Min V_z	-0.45	0.15	▷ -1.86	0.02	0.00	0.15	BC 14
				Max M_T	0.43	-0.14	-1.84	▷ 0.02	0.00	-0.23	BC 15
				Min M_T	-0.88	-0.21	0.41	▷ -0.09	0.00	-0.34	BC 23
				Max M_y	-0.88	-0.21	0.41	-0.09	▷ 0.00	-0.34	BC 23
				Min M_y	-4.68	1.32	4.65	-0.05	▷ -0.00	1.06	BC 9
				Max M_z	-4.81	1.50	4.07	-0.02	-0.00	▷ 1.28	BC 12
				Min M_z	-1.58	-0.28	0.34	-0.02	0.00	▷ -0.46	BC 21
			0.583	Max N	▷ 0.48	-0.14	-1.39	0.02	-0.99	-0.14	BC 15
			Links	Min N	▷ -5.04	1.18	3.39	-0.05	2.43	0.36	BC 10
				Max V_y	-4.35	▷ 1.27	2.98	-0.02	2.14	0.45	BC 12
				Min V_y	-1.52	▷ -0.29	0.21	-0.02	0.17	-0.30	BC 21
				Max V_z	-4.67	1.24	▷ 3.41	-0.05	2.44	0.43	BC 8
				Min V_z	-0.38	0.13	▷ -1.40	0.02	-1.00	0.06	BC 14
				Max M_T	0.48	-0.14	-1.39	▷ 0.02	-0.99	-0.14	BC 15
				Min M_T	-0.83	-0.21	0.29	▷ -0.09	0.22	-0.22	BC 23
				Max M_y	-4.23	1.10	3.41	-0.05	▷ 2.44	0.32	BC 9
				Min M_y	-0.38	0.13	-1.40	0.02	▷ -1.00	0.06	BC 14
				Max M_z	-2.97	0.99	1.95	0.01	1.40	▷ 0.46	BC 6
				Min M_z	-1.52	-0.29	0.21	-0.02	0.17	▷ -0.30	BC 21
			0.583	Max N	▷ 0.48	-0.14	-1.39	0.02	-0.99	-0.14	BC 15
			Rechts	Min N	▷ -5.04	1.18	3.39	-0.05	2.43	0.36	BC 10
				Max V_y	-4.35	▷ 1.27	2.98	-0.02	2.14	0.45	BC 12
				Min V_y	-1.52	▷ -0.29	0.21	-0.02	0.17	-0.30	BC 21
				Max V_z	-4.67	1.24	▷ 3.41	-0.05	2.44	0.43	BC 8
				Min V_z	-0.38	0.13	▷ -1.40	0.02	-1.00	0.06	BC 14
				Max M_T	0.48	-0.14	-1.39	▷ 0.02	-0.99	-0.14	BC 15
				Min M_T	-0.83	-0.21	0.29	▷ -0.09	0.22	-0.22	BC 23
				Max M_y	-4.23	1.10	3.41	-0.05	▷ 2.44	0.32	BC 9
				Min M_y	-0.38	0.13	-1.40	0.02	▷ -1.00	0.06	BC 14
				Max M_z	-2.97	0.99	1.95	0.01	1.40	▷ 0.46	BC 6
				Min M_z	-1.52	-0.29	0.21	-0.02	0.17	▷ -0.30	BC 21
			0.679	Max N	▷ 0.49	-0.14	-1.23	0.02	-1.11	-0.13	BC 15
			Links	Min N	▷ -4.89	1.10	2.99	-0.05	2.73	0.25	BC 10
				Max V_y	-4.20	▷ 1.19	2.63	-0.02	2.41	0.33	BC 12
				Min V_y	-1.51	▷ -0.29	0.18	-0.02	0.19	-0.27	BC 21
				Max V_z	-4.52	1.16	▷ 3.01	-0.05	2.75	0.31	BC 8
				Min V_z	-0.36	0.12	▷ -1.23	0.02	-1.12	0.05	BC 14
				Max M_T	0.49	-0.14	-1.23	▷ 0.02	-1.11	-0.13	BC 15
				Min M_T	-0.82	-0.21	0.26	▷ -0.09	0.24	-0.20	BC 23
				Max M_y	-4.08	1.03	3.01	-0.05	▷ 2.75	0.22	BC 9
				Min M_y	-0.36	0.12	-1.23	0.02	▷ -1.12	0.05	BC 14
				Max M_z	-2.86	0.93	1.73	0.00	1.58	▷ 0.37	BC 6
				Min M_z	-1.51	-0.29	0.18	-0.02	0.19	▷ -0.27	BC 21
			0.679	Max N	▷ 0.49	-0.14	-1.23	0.02	-1.11	-0.13	BC 15
			Rechts	Min N	▷ -4.89	1.10	2.99	-0.05	2.73	0.25	BC 10

4.12 DOORSNEDES - SNEDEKRACHTEN

Resultaatcombinaties

Staaf No.	RC	Knoop No.	Snede x [m]		Krachten [kN] N	V_y	V_z	Momenten [kNm] M_T	M_y	M_z	Bijbehorend Belastingsgeval
49	RC1			Max V_y	-4.20	▷ 1.19	2.63	-0.02	2.41	0.33	BC 12
				Min V_y	-1.51	▷ -0.29	0.18	-0.02	0.19	-0.27	BC 21
				Max V_z	-4.52	1.16	▷ 3.01	-0.05	2.75	0.31	BC 8
				Min V_z	-0.36	0.12	▷ -1.23	0.02	-1.12	0.05	BC 14
				Max M_T	0.49	-0.14	-1.23	▷ 0.02	-1.11	-0.13	BC 15
				Min M_T	-0.82	-0.21	0.26	▷ -0.09	0.24	-0.20	BC 23
				Max M_y	-4.08	1.03	3.01	-0.05	▷ 2.75	0.22	BC 9
				Min M_y	-0.36	0.12	-1.23	0.02	▷ -1.12	0.05	BC 14
				Max M_z	-2.86	0.93	1.73	0.00	1.58	▷ 0.37	BC 6
				Min M_z	-1.51	-0.29	0.18	-0.02	0.19	▷ -0.27	BC 21
			0.707	Max N	▷ 0.50	-0.14	-1.18	0.02	-1.15	-0.13	BC 15
			Links	Min N	▷ -4.85	1.07	2.87	-0.05	2.82	0.22	BC 10
				Max V_y	-4.15	▷ 1.16	2.52	-0.02	2.48	0.30	BC 12
				Min V_y	-1.51	▷ -0.29	0.17	-0.02	0.19	-0.26	BC 21
				Max V_z	-4.47	1.14	▷ 2.88	-0.05	2.83	0.28	BC 8
				Min V_z	-0.36	0.12	▷ -1.18	0.02	-1.16	0.05	BC 14
				Max M_T	0.50	-0.14	-1.18	▷ 0.02	-1.15	-0.13	BC 15
				Min M_T	-0.82	-0.21	0.25	▷ -0.09	0.25	-0.19	BC 23
				Max M_y	-4.04	1.00	2.88	-0.05	▷ 2.83	0.19	BC 9
				Min M_y	-0.36	0.12	-1.18	0.02	▷ -1.16	0.05	BC 14
				Max M_z	-2.83	0.92	1.66	0.00	1.63	▷ 0.35	BC 6
				Min M_z	-1.51	-0.29	0.17	-0.02	0.19	▷ -0.26	BC 21
			0.707	Max N	▷ 0.50	-0.14	-1.18	0.02	-1.15	-0.13	BC 15
			Rechts	Min N	▷ -4.85	1.07	2.87	-0.05	2.82	0.22	BC 10
				Max V_y	-4.15	▷ 1.16	2.52	-0.02	2.48	0.30	BC 12
				Min V_y	-1.51	▷ -0.29	0.17	-0.02	0.19	-0.26	BC 21
				Max V_z	-4.47	1.14	▷ 2.88	-0.05	2.83	0.28	BC 8
				Min V_z	-0.36	0.12	▷ -1.18	0.02	-1.16	0.05	BC 14
				Max M_T	0.50	-0.14	-1.18	▷ 0.02	-1.15	-0.13	BC 15
				Min M_T	-0.82	-0.21	0.25	▷ -0.09	0.25	-0.19	BC 23
				Max M_y	-4.04	1.00	2.88	-0.05	▷ 2.83	0.19	BC 9
				Min M_y	-0.36	0.12	-1.18	0.02	▷ -1.16	0.05	BC 14
				Max M_z	-2.83	0.92	1.66	0.00	1.63	▷ 0.35	BC 6
				Min M_z	-1.51	-0.29	0.17	-0.02	0.19	▷ -0.26	BC 21
			2.552	Max N	▷ 0.85	0.06	-0.64	0.02	0.10	-0.09	BC 19
			Links	Min N	▷ -2.11	-0.28	-4.09	-0.06	0.62	-0.23	BC 4
				Max V_y	0.14	▷ 0.18	-0.54	0.02	0.19	-0.27	BC 18
				Min V_y	-1.43	▷ -0.57	-5.04	-0.06	0.70	-0.19	BC 11
				Max V_z	0.08	-0.01	▷ 2.19	0.02	-0.23	-0.05	BC 14
				Min V_z	-1.43	-0.57	▷ -5.04	-0.06	0.70	-0.19	BC 11
				Max M_T	0.78	-0.13	2.08	▷ 0.02	-0.31	0.13	BC 15
				Min M_T	-0.54	-0.20	-0.43	▷ -0.09	0.08	0.18	BC 23
				Max M_y	-1.42	-0.45	-4.97	-0.06	▷ 0.79	-0.33	BC 8
				Min M_y	0.78	-0.13	2.08	0.02	▷ -0.31	0.13	BC 15
				Max M_z	-1.23	-0.27	-0.51	-0.02	-0.12	▷ 0.26	BC 21
				Min M_z	-0.72	-0.13	-2.79	0.00	0.53	▷ -0.37	BC 6
			2.552	Max N	▷ 0.85	0.06	-0.64	0.02	0.10	-0.09	BC 19
			Rechts	Min N	▷ -2.11	-0.28	-4.09	-0.06	0.62	-0.23	BC 4
				Max V_y	0.14	▷ 0.18	-0.54	0.02	0.19	-0.27	BC 18
				Min V_y	-1.43	▷ -0.57	-5.04	-0.06	0.70	-0.19	BC 11
				Max V_z	0.08	-0.01	▷ 2.19	0.02	-0.23	-0.05	BC 14
				Min V_z	-1.43	-0.57	▷ -5.04	-0.06	0.70	-0.19	BC 11
				Max M_T	0.78	-0.13	2.08	▷ 0.02	-0.31	0.13	BC 15
				Min M_T	-0.54	-0.20	-0.43	▷ -0.09	0.08	0.18	BC 23
				Max M_y	-1.41	-0.45	-4.97	-0.06	▷ 0.79	-0.33	BC 8
				Min M_y	0.78	-0.13	2.08	0.02	▷ -0.31	0.13	BC 15
				Max M_z	-1.23	-0.27	-0.51	-0.02	-0.12	▷ 0.26	BC 21
				Min M_z	-0.72	-0.13	-2.79	0.00	0.53	▷ -0.37	BC 6
			2.581	Max N	▷ 0.86	0.06	-0.65	0.02	0.08	-0.09	BC 19
			Links	Min N	▷ -2.08	-0.30	-4.18	-0.06	0.51	-0.22	BC 4
				Max V_y	0.15	▷ 0.18	-0.55	0.02	0.17	-0.27	BC 18
				Min V_y	-1.38	▷ -0.59	-5.15	-0.06	0.55	-0.17	BC 11
				Max V_z	0.08	-0.01	▷ 2.24	0.02	-0.16	-0.05	BC 14
				Min V_z	-1.38	-0.59	▷ -5.15	-0.06	0.55	-0.17	BC 11
				Max M_T	0.78	-0.13	2.13	▷ 0.02	-0.25	0.13	BC 15
				Min M_T	-0.53	-0.20	-0.44	▷ -0.09	0.07	0.19	BC 23
				Max M_y	-1.37	-0.47	-5.08	-0.06	▷ 0.65	-0.32	BC 8
				Min M_y	0.78	-0.13	2.13	0.02	▷ -0.25	0.13	BC 15
				Max M_z	-1.22	-0.27	-0.52	-0.02	-0.14	▷ 0.27	BC 21
				Min M_z	-0.69	-0.15	-2.85	0.00	0.45	▷ -0.36	BC 6
			2.581	Max N	▷ 0.86	0.06	-0.65	0.02	0.08	-0.09	BC 19
			Rechts	Min N	▷ -2.08	-0.30	-4.18	-0.06	0.51	-0.22	BC 4
				Max V_y	0.15	▷ 0.18	-0.55	0.02	0.17	-0.27	BC 18
				Min V_y	-1.38	▷ -0.59	-5.15	-0.06	0.55	-0.17	BC 11
				Max V_z	0.08	-0.01	▷ 2.24	0.02	-0.16	-0.05	BC 14
				Min V_z	-1.38	-0.59	▷ -5.15	-0.06	0.55	-0.17	BC 11
				Max M_T	0.78	-0.13	2.13	▷ 0.02	-0.25	0.13	BC 15
				Min M_T	-0.53	-0.20	-0.44	▷ -0.09	0.07	0.19	BC 23
				Max M_y	-1.37	-0.47	-5.08	-0.06	▷ 0.65	-0.32	BC 8
				Min M_y	0.78	-0.13	2.13	0.02	▷ -0.25	0.13	BC 15
				Max M_z	-1.22	-0.27	-0.52	-0.02	-0.14	▷ 0.27	BC 21
				Min M_z	-0.69	-0.15	-2.85	0.00	0.45	▷ -0.36	BC 6
			2.677	Max N	▷ 0.88	0.06	-0.70	0.02	0.01	-0.10	BC 19
			Links	Min N	▷ -1.98	-0.34	-4.49	-0.06	0.09	-0.19	BC 4

4.12 DOORSNEDES - SNEDEKRACHTEN

Resultaatcombinaties

Staaf No.	RC	Knoop No.	Snede x [m]		Krachten [kN] N	V_y	V_z	Momenten [kNm] M_T	M_y	M_z	Bijbehorend Belastingsgeval
49	RC1			Max V_y	0.18	▷ 0.16	-0.59	0.02	0.12	-0.29	BC 18
				Min V_y	-1.24	▷ -0.66	-5.52	-0.06	0.04	-0.11	BC 11
				Max V_z	0.11	-0.02	▷ 2.41	0.02	0.06	-0.05	BC 14
				Min V_z	-1.24	-0.66	▷ -5.52	-0.06	0.04	-0.11	BC 11
				Max M_T	0.80	-0.13	2.29	▷ 0.02	-0.04	0.14	BC 15
				Min M_T	-0.52	-0.19	-0.47	▷ -0.09	0.03	0.21	BC 23
				Max M_y	-1.23	-0.21	-4.44	-0.05	▷ 0.19	-0.32	BC 2
				Min M_y	-1.21	-0.27	-0.55	-0.02	▷ -0.19	0.30	BC 21
				Max M_z	-1.21	-0.27	-0.55	-0.02	-0.19	▷ 0.30	BC 21
				Min M_z	-0.58	-0.20	-3.06	0.00	0.16	▷ -0.35	BC 6
			2.677	Max N	▷ 0.88	0.06	-0.70	0.02	0.01	-0.10	BC 19
			Rechts	Min N	▷ -1.98	-0.34	-4.49	-0.06	0.09	-0.19	BC 4
				Max V_y	0.18	▷ 0.16	-0.59	0.02	0.12	-0.29	BC 18
				Min V_y	-1.24	▷ -0.66	-5.52	-0.06	0.04	-0.11	BC 11
				Max V_z	0.11	-0.02	▷ 2.41	0.02	0.06	-0.05	BC 14
				Min V_z	-1.24	-0.66	▷ -5.52	-0.06	0.04	-0.11	BC 11
				Max M_T	0.80	-0.13	2.29	▷ 0.02	-0.04	0.14	BC 15
				Min M_T	-0.52	-0.19	-0.47	▷ -0.09	0.03	0.21	BC 23
				Max M_y	-1.23	-0.21	-4.44	-0.05	▷ 0.19	-0.32	BC 2
				Min M_y	-1.21	-0.27	-0.55	-0.02	▷ -0.19	0.30	BC 21
				Max M_z	-1.21	-0.27	-0.55	-0.02	-0.19	▷ 0.30	BC 21
				Min M_z	-0.58	-0.20	-3.06	0.00	0.16	▷ -0.35	BC 6
			3.260	Max N	▷ 0.96	0.04	-0.88	0.02	-0.46	-0.13	BC 19
			Links	Min N	▷ -1.84	-0.19	-0.55	-0.02	-0.38	0.21	BC 20
				Max V_y	0.28	▷ 0.13	-0.76	0.02	-0.29	-0.37	BC 18
				Min V_y	-0.88	▷ -0.84	-6.52	-0.06	-3.57	0.36	BC 11
				Max V_z	0.18	-0.04	▷ 2.87	0.02	1.65	-0.03	BC 14
				Min V_z	-0.88	-0.84	▷ -6.52	-0.06	-3.57	0.36	BC 11
				Max M_T	0.84	-0.13	2.74	▷ 0.02	1.47	0.22	BC 15
				Min M_T	-1.14	-0.11	-0.47	▷ -0.09	-0.12	0.08	BC 22
				Max M_y	0.18	-0.04	2.87	0.02	▷ 1.65	-0.03	BC 14
				Min M_y	-0.88	-0.84	-6.52	-0.06	▷ -3.57	0.36	BC 11
				Max M_z	-1.16	-0.28	-0.67	-0.02	-0.55	▷ 0.46	BC 21
				Min M_z	0.28	0.13	-0.76	0.02	-0.29	▷ -0.37	BC 18
		56	3.260	Max N	▷ 0.96	0.04	-0.88	0.02	-0.46	-0.13	BC 19
			Rechts	Min N	▷ -1.84	-0.19	-0.55	-0.02	-0.38	0.21	BC 20
				Max V_y	0.28	▷ 0.13	-0.76	0.02	-0.29	-0.37	BC 18
				Min V_y	-0.88	▷ -0.84	-6.52	-0.06	-3.57	0.36	BC 11
				Max V_z	0.18	-0.04	▷ 2.87	0.02	1.65	-0.03	BC 14
				Min V_z	-0.88	-0.84	▷ -6.52	-0.06	-3.57	0.36	BC 11
				Max M_T	0.84	-0.13	2.74	▷ 0.02	1.47	0.22	BC 15
				Min M_T	-1.14	-0.11	-0.47	▷ -0.09	-0.12	0.08	BC 22
				Max M_y	0.18	-0.04	2.87	0.02	▷ 1.65	-0.03	BC 14
				Min M_y	-0.88	-0.84	-6.52	-0.06	▷ -3.57	0.36	BC 11
				Max M_z	-1.16	-0.28	-0.67	-0.02	-0.55	▷ 0.46	BC 21
				Min M_z	0.28	0.13	-0.76	0.02	-0.29	▷ -0.37	BC 18
50	RC1	166	0.000	Max N	▷ 1.43	0.40	1.90	-0.10	-0.00	0.44	BC 23
			Links	Min N	▷ -5.50	1.41	-4.63	0.05	0.00	1.14	BC 10
				Max V_y	-4.59	▷ 1.51	-4.62	0.04	0.00	1.24	BC 9
				Min V_y	0.00	▷ 0.00	0.00	0.00	0.00	0.00	
				Max V_z	1.43	0.40	▷ 1.90	-0.10	-0.00	0.44	BC 23
				Min V_z	-5.32	1.42	▷ -4.65	0.07	0.01	1.17	BC 12
				Max M_T	-4.32	0.99	-3.82	▷ 0.09	0.00	0.88	BC 6
				Min M_T	1.43	0.40	1.90	▷ -0.10	-0.00	0.44	BC 23
				Max M_y	-5.32	1.42	-4.65	0.07	▷ 0.01	1.17	BC 12
				Min M_y	1.43	0.40	1.90	-0.10	▷ -0.00	0.44	BC 23
				Max M_z	-5.13	1.47	-4.65	0.05	0.00	▷ 1.25	BC 8
				Min M_z	-1.39	0.08	-0.28	0.02	0.00	▷ -0.10	BC 21
			0.000	Max N	▷ 1.43	0.40	1.90	-0.10	-0.00	0.44	BC 23
			Rechts	Min N	▷ -5.50	1.41	-4.63	0.05	0.00	1.14	BC 10
				Max V_y	-4.59	▷ 1.51	-4.62	0.04	0.00	1.24	BC 9
				Min V_y	0.00	▷ 0.00	0.00	0.00	0.00	0.00	
				Max V_z	1.43	0.40	▷ 1.90	-0.10	-0.00	0.44	BC 23
				Min V_z	-5.32	1.42	▷ -4.65	0.07	0.01	1.17	BC 12
				Max M_T	-4.32	0.99	-3.82	▷ 0.09	0.00	0.88	BC 6
				Min M_T	1.43	0.40	1.90	▷ -0.10	-0.00	0.44	BC 23
				Max M_y	-5.32	1.42	-4.65	0.07	▷ 0.01	1.17	BC 12
				Min M_y	1.43	0.40	1.90	-0.10	▷ -0.00	0.44	BC 23
				Max M_z	-5.13	1.47	-4.65	0.05	0.00	▷ 1.25	BC 8
				Min M_z	-1.39	0.08	-0.28	0.02	0.00	▷ -0.10	BC 21
			0.583	Max N	▷ 1.47	0.35	1.44	-0.10	1.02	0.21	BC 23
			Links	Min N	▷ -5.04	1.18	-3.39	0.05	-2.43	0.36	BC 10
				Max V_y	-4.14	▷ 1.27	-3.38	0.05	-2.42	0.40	BC 9
				Min V_y	-2.40	▷ -0.02	-0.21	0.02	-0.16	-0.09	BC 20
				Max V_z	1.47	0.35	▷ 1.44	-0.10	1.02	0.21	BC 23
				Min V_z	-4.86	1.19	▷ -3.41	0.07	-2.44	0.38	BC 12
				Max M_T	-4.00	0.85	-2.81	▷ 0.09	-2.00	0.32	BC 6
				Min M_T	1.47	0.35	1.44	▷ -0.10	1.02	0.21	BC 23
				Max M_y	0.66	0.17	1.44	-0.03	▷ 1.02	0.01	BC 15
				Min M_y	-4.86	1.19	-3.41	0.07	▷ -2.44	0.38	BC 12
				Max M_z	-4.67	1.24	-3.41	0.05	-2.44	▷ 0.43	BC 8
				Min M_z	-1.34	0.03	-0.17	0.02	-0.14	▷ -0.14	BC 21
			0.583	Max N	▷ 1.47	0.35	1.44	-0.10	1.02	0.21	BC 23
			Rechts	Min N	▷ -5.04	1.18	-3.39	0.05	-2.43	0.36	BC 10

4.12 DOORSNEDES - SNEDEKRACHTEN

Resultaatcombinaties

Staaf No.	RC	Knoop No.	Snede x [m]		Krachten [kN] N	V_y	V_z	Momenten [kNm] M_T	M_y	M_z	Bijbehorend Belastingsgeval
50	RC1			Max V_y	-4.14	▷ 1.27	-3.38	0.05	-2.42	0.40	BC 9
				Min V_y	-2.40	▷ -0.02	-0.21	0.02	-0.16	-0.09	BC 20
				Max V_z	1.47	0.35	▷ 1.44	-0.10	1.02	0.21	BC 23
				Min V_z	-4.86	1.19	▷ -3.41	0.07	-2.44	0.38	BC 12
				Max M_T	-4.00	0.85	-2.81	▷ 0.09	-2.00	0.32	BC 6
				Min M_T	1.47	0.35	1.44	▷ -0.10	1.02	0.21	BC 23
				Max M_y	0.66	0.17	1.44	-0.03	▷ 1.02	0.01	BC 15
				Min M_y	-4.86	1.19	-3.41	0.07	▷ -2.44	0.38	BC 12
				Max M_z	-4.67	1.24	-3.41	0.05	-2.44	▷ 0.43	BC 8
				Min M_z	-1.34	0.03	-0.17	0.02	-0.14	▷ -0.14	BC 21
			0.679	Max N	▷ 1.49	0.34	1.27	-0.10	1.15	0.17	BC 23
			Links	Min N	▷ -4.89	1.10	-2.99	0.05	-2.73	0.25	BC 10
				Max V_y	-3.99	▷ 1.18	-2.98	0.05	-2.73	0.29	BC 9
				Min V_y	-2.37	▷ -0.02	-0.18	0.02	-0.18	-0.09	BC 20
				Max V_z	1.49	0.34	▷ 1.27	-0.10	1.15	0.17	BC 23
				Min V_z	-4.71	1.11	▷ -3.01	0.07	-2.75	0.27	BC 12
				Max M_T	-3.90	0.80	-2.49	▷ 0.09	-2.26	0.24	BC 6
				Min M_T	1.49	0.34	1.27	▷ -0.10	1.15	0.17	BC 23
				Max M_y	0.68	0.15	1.27	-0.03	▷ 1.15	-0.00	BC 15
				Min M_y	-4.71	1.11	-3.01	0.07	▷ -2.75	0.27	BC 12
				Max M_z	-3.51	0.89	-2.48	0.05	-2.26	▷ 0.33	BC 2
				Min M_z	-1.32	0.01	-0.14	0.02	-0.15	▷ -0.14	BC 21
			0.679	Max N	▷ 1.49	0.34	1.27	-0.10	1.15	0.17	BC 23
			Rechts	Min N	▷ -4.89	1.10	-2.99	0.05	-2.73	0.25	BC 10
				Max V_y	-3.99	▷ 1.18	-2.98	0.05	-2.73	0.29	BC 9
				Min V_y	-2.37	▷ -0.02	-0.18	0.02	-0.18	-0.09	BC 20
				Max V_z	1.49	0.34	▷ 1.27	-0.10	1.15	0.17	BC 23
				Min V_z	-4.71	1.11	▷ -3.01	0.07	-2.75	0.27	BC 12
				Max M_T	-3.90	0.80	-2.49	▷ 0.09	-2.26	0.24	BC 6
				Min M_T	1.49	0.34	1.27	▷ -0.10	1.15	0.17	BC 23
				Max M_y	0.68	0.15	1.27	-0.03	▷ 1.15	-0.00	BC 15
				Min M_y	-4.71	1.11	-3.01	0.07	▷ -2.75	0.27	BC 12
				Max M_z	-3.51	0.89	-2.48	0.05	-2.26	▷ 0.33	BC 2
				Min M_z	-1.32	0.01	-0.14	0.02	-0.15	▷ -0.14	BC 21
			0.707	Max N	▷ 1.49	0.33	1.22	-0.10	1.18	0.16	BC 23
			Links	Min N	▷ -4.85	1.07	-2.87	0.05	-2.82	0.22	BC 10
				Max V_y	-3.95	▷ 1.16	-2.86	0.05	-2.81	0.25	BC 9
				Min V_y	-2.37	▷ -0.02	-0.17	0.02	-0.18	-0.08	BC 20
				Max V_z	1.49	0.33	▷ 1.22	-0.10	1.18	0.16	BC 23
				Min V_z	-4.67	1.09	▷ -2.89	0.07	-2.83	0.24	BC 12
				Max M_T	-3.87	0.78	-2.38	▷ 0.09	-2.33	0.22	BC 6
				Min M_T	1.49	0.33	1.22	▷ -0.10	1.18	0.16	BC 23
				Max M_y	0.68	0.15	1.22	-0.03	▷ 1.18	-0.01	BC 15
				Min M_y	-4.67	1.09	-2.89	0.07	▷ -2.83	0.24	BC 12
				Max M_z	-3.48	0.88	-2.38	0.05	-2.33	▷ 0.31	BC 2
				Min M_z	-1.32	0.00	-0.13	0.02	-0.15	▷ -0.14	BC 21
			0.707	Max N	▷ 1.49	0.33	1.22	-0.10	1.18	0.16	BC 23
			Rechts	Min N	▷ -4.85	1.07	-2.87	0.05	-2.82	0.22	BC 10
				Max V_y	-3.95	▷ 1.16	-2.86	0.05	-2.81	0.25	BC 9
				Min V_y	-2.37	▷ -0.02	-0.17	0.02	-0.18	-0.08	BC 20
				Max V_z	1.49	0.33	▷ 1.22	-0.10	1.18	0.16	BC 23
				Min V_z	-4.67	1.09	▷ -2.89	0.07	-2.83	0.24	BC 12
				Max M_T	-3.87	0.78	-2.38	▷ 0.09	-2.33	0.22	BC 6
				Min M_T	1.49	0.33	1.22	▷ -0.10	1.18	0.16	BC 23
				Max M_y	0.68	0.15	1.22	-0.03	▷ 1.18	-0.01	BC 15
				Min M_y	-4.67	1.09	-2.89	0.07	▷ -2.83	0.24	BC 12
				Max M_z	-3.48	0.88	-2.38	0.05	-2.33	▷ 0.31	BC 2
				Min M_z	-1.32	0.00	-0.13	0.02	-0.15	▷ -0.14	BC 21
			2.552	Max N	▷ 1.76	0.04	-2.11	-0.11	0.37	-0.18	BC 23
			Links	Min N	▷ -2.11	-0.28	4.09	0.06	-0.62	-0.23	BC 4
				Max V_y	0.88	▷ 0.19	-2.18	-0.10	0.24	-0.23	BC 22
				Min V_y	-1.34	▷ -0.59	5.02	0.06	-0.68	-0.25	BC 11
				Max V_z	-1.34	-0.59	▷ 5.02	0.06	-0.68	-0.25	BC 11
				Min V_z	0.08	-0.01	▷ -2.19	-0.02	0.23	-0.05	BC 14
				Max M_T	-1.76	-0.23	4.05	▷ 0.09	-0.73	-0.27	BC 6
				Min M_T	1.76	0.04	-2.11	▷ -0.11	0.37	-0.18	BC 23
				Max M_y	1.76	0.04	-2.11	-0.11	▷ 0.37	-0.18	BC 23
				Min M_y	-1.61	-0.48	4.97	0.07	▷ -0.79	-0.30	BC 12
				Max M_z	-1.04	-0.31	0.47	0.02	0.16	▷ 0.14	BC 21
				Min M_z	-1.37	-0.15	4.04	0.05	-0.72	▷ -0.35	BC 2
			2.552	Max N	▷ 1.76	0.04	-2.11	-0.11	0.37	-0.18	BC 23
			Rechts	Min N	▷ -2.11	-0.28	4.09	0.06	-0.62	-0.23	BC 4
				Max V_y	0.88	▷ 0.19	-2.18	-0.10	0.24	-0.23	BC 22
				Min V_y	-1.34	▷ -0.59	5.02	0.06	-0.68	-0.25	BC 11
				Max V_z	-1.34	-0.59	▷ 5.02	0.06	-0.68	-0.25	BC 11
				Min V_z	0.08	-0.01	▷ -2.19	-0.02	0.23	-0.05	BC 14
				Max M_T	-1.76	-0.23	4.05	▷ 0.09	-0.73	-0.27	BC 6
				Min M_T	1.76	0.04	-2.11	▷ -0.11	0.37	-0.18	BC 23
				Max M_y	1.76	0.04	-2.11	-0.11	▷ 0.37	-0.18	BC 23
				Min M_y	-1.61	-0.48	4.97	0.07	▷ -0.79	-0.30	BC 12
				Max M_z	-1.04	-0.31	0.47	0.02	0.16	▷ 0.14	BC 21
				Min M_z	-1.37	-0.15	4.04	0.05	-0.72	▷ -0.35	BC 2
			2.581	Max N	▷ 1.77	0.04	-2.16	-0.11	0.31	-0.18	BC 23
			Links	Min N	▷ -2.08	-0.30	4.18	0.06	-0.51	-0.22	BC 4

4.12 DOORSNEDES - SNEDEKRACHTEN

Resultaatcombinaties

Staaf No.	RC	Knoop No.	Snede x [m]		Krachten [kN] N	V_y	V_z	Momenten [kNm] M_T	M_y	M_z	Bijbehorend Belastingsgeval
50	RC1			Max V_y	0.88	▷ 0.19	-2.23	-0.10	0.17	-0.23	BC 22
				Min V_y	-1.29	▷ -0.61	5.13	0.06	-0.53	-0.23	BC 11
				Max V_z	-1.29	-0.61	▷ 5.13	0.06	-0.53	-0.23	BC 11
				Min V_z	0.08	-0.01	▷ -2.24	-0.02	0.16	-0.05	BC 14
				Max M_T	-1.73	-0.24	4.14	▷ 0.09	-0.61	-0.26	BC 6
				Min M_T	1.77	0.04	-2.16	▷ -0.11	0.31	-0.18	BC 23
				Max M_y	1.77	0.04	-2.16	-0.11	▷ 0.31	-0.18	BC 23
				Min M_y	-1.56	-0.51	5.08	0.07	▷ -0.65	-0.28	BC 12
				Max M_z	-1.03	-0.31	0.48	0.02	0.18	▷ 0.15	BC 21
				Min M_z	-1.34	-0.17	4.14	0.05	-0.61	▷ -0.34	BC 2
			2.581	Max N	▷ 1.77	0.04	-2.16	-0.11	0.31	-0.18	BC 23
			Rechts	Min N	▷ -2.08	-0.30	4.18	0.06	-0.51	-0.22	BC 4
				Max V_y	0.88	▷ 0.19	-2.23	-0.10	0.17	-0.23	BC 22
				Min V_y	-1.29	▷ -0.61	5.13	0.06	-0.53	-0.23	BC 11
				Max V_z	-1.29	-0.61	▷ 5.13	0.06	-0.53	-0.23	BC 11
				Min V_z	0.08	-0.01	▷ -2.24	-0.02	0.16	-0.05	BC 14
				Max M_T	-1.73	-0.24	4.14	▷ 0.09	-0.61	-0.26	BC 6
				Min M_T	1.77	0.04	-2.16	▷ -0.11	0.31	-0.18	BC 23
				Max M_y	1.77	0.04	-2.16	-0.11	▷ 0.31	-0.18	BC 23
				Min M_y	-1.56	-0.51	5.08	0.07	▷ -0.65	-0.28	BC 12
				Max M_z	-1.03	-0.31	0.48	0.02	0.18	▷ 0.15	BC 21
				Min M_z	-1.34	-0.17	4.14	0.05	-0.61	▷ -0.34	BC 2
			2.677	Max N	▷ 1.78	0.02	-2.33	-0.11	0.09	-0.18	BC 23
			Links	Min N	▷ -1.98	-0.34	4.49	0.06	-0.09	-0.19	BC 4
				Max V_y	0.91	▷ 0.18	-2.40	-0.10	-0.05	-0.25	BC 22
				Min V_y	-1.15	▷ -0.69	5.50	0.06	-0.02	-0.16	BC 11
				Max V_z	-1.15	-0.69	▷ 5.50	0.06	-0.02	-0.16	BC 11
				Min V_z	0.11	-0.02	▷ -2.41	-0.02	-0.06	-0.05	BC 14
				Max M_T	-1.62	-0.29	4.45	▷ 0.09	-0.20	-0.24	BC 6
				Min M_T	1.78	0.02	-2.33	▷ -0.11	0.09	-0.18	BC 23
				Max M_y	-1.02	-0.33	0.51	0.02	▷ 0.22	0.18	BC 21
				Min M_y	-1.62	-0.29	4.45	0.09	▷ -0.20	-0.24	BC 6
				Max M_z	-1.02	-0.33	0.51	0.02	0.22	▷ 0.18	BC 21
				Min M_z	-1.23	-0.21	4.44	0.05	-0.19	▷ -0.32	BC 2
			2.677	Max N	▷ 1.78	0.02	-2.33	-0.11	0.09	-0.18	BC 23
			Rechts	Min N	▷ -1.98	-0.34	4.49	0.06	-0.09	-0.19	BC 4
				Max V_y	0.91	▷ 0.18	-2.40	-0.10	-0.05	-0.25	BC 22
				Min V_y	-1.15	▷ -0.69	5.50	0.06	-0.02	-0.16	BC 11
				Max V_z	-1.15	-0.69	▷ 5.50	0.06	-0.02	-0.16	BC 11
				Min V_z	0.11	-0.02	▷ -2.41	-0.02	-0.06	-0.05	BC 14
				Max M_T	-1.62	-0.29	4.45	▷ 0.09	-0.20	-0.24	BC 6
				Min M_T	1.78	0.02	-2.33	▷ -0.11	0.09	-0.18	BC 23
				Max M_y	-1.02	-0.33	0.51	0.02	▷ 0.22	0.18	BC 21
				Min M_y	-1.62	-0.29	4.45	0.09	▷ -0.20	-0.24	BC 6
				Max M_z	-1.02	-0.33	0.51	0.02	0.22	▷ 0.18	BC 21
				Min M_z	-1.23	-0.21	4.44	0.05	-0.19	▷ -0.32	BC 2
			3.260	Max N	▷ 1.83	-0.02	-2.79	-0.11	-1.45	-0.16	BC 23
			Links	Min N	▷ -1.84	-0.19	0.55	0.02	0.38	0.21	BC 20
				Max V_y	0.97	▷ 0.16	-2.86	-0.10	-1.63	-0.34	BC 22
				Min V_y	-0.79	▷ -0.90	6.49	0.06	3.58	0.33	BC 11
				Max V_z	-0.79	-0.90	▷ 6.49	0.06	3.58	0.33	BC 11
				Min V_z	0.18	-0.04	▷ -2.87	-0.02	-1.65	-0.03	BC 14
				Max M_T	-1.35	-0.42	5.30	▷ 0.09	2.73	0.00	BC 6
				Min M_T	1.83	-0.02	-2.79	▷ -0.11	-1.45	-0.16	BC 23
				Max M_y	-0.79	-0.90	6.49	0.06	▷ 3.58	0.33	BC 11
				Min M_y	0.18	-0.04	-2.87	-0.02	▷ -1.65	-0.03	BC 14
				Max M_z	-0.97	-0.38	0.62	0.02	0.56	▷ 0.39	BC 21
				Min M_z	0.97	0.16	-2.86	-0.10	-1.63	▷ -0.34	BC 22
		59	3.260	Max N	▷ 1.83	-0.02	-2.79	-0.11	-1.45	-0.16	BC 23
			Rechts	Min N	▷ -1.84	-0.19	0.55	0.02	0.38	0.21	BC 20
				Max V_y	0.97	▷ 0.16	-2.86	-0.10	-1.63	-0.34	BC 22
				Min V_y	-0.79	▷ -0.90	6.49	0.06	3.58	0.33	BC 11
				Max V_z	-0.79	-0.90	▷ 6.49	0.06	3.58	0.33	BC 11
				Min V_z	0.18	-0.04	▷ -2.87	-0.02	-1.65	-0.03	BC 14
				Max M_T	-1.35	-0.42	5.30	▷ 0.09	2.73	0.00	BC 6
				Min M_T	1.83	-0.02	-2.79	▷ -0.11	-1.45	-0.16	BC 23
				Max M_y	-0.79	-0.90	6.49	0.06	▷ 3.58	0.33	BC 11
				Min M_y	0.18	-0.04	-2.87	-0.02	▷ -1.65	-0.03	BC 14
				Max M_z	-0.97	-0.38	0.62	0.02	0.56	▷ 0.39	BC 21
				Min M_z	0.97	0.16	-2.86	-0.10	-1.63	▷ -0.34	BC 22
51	RC1	168	0.000	Max N	▷ 0.00	0.00	0.00	0.00	0.00	0.00	
			Links	Min N	▷ -5.28	1.44	-4.40	-0.00	0.01	1.29	BC 10
				Max V_y	-4.83	▷ 1.55	-4.40	-0.01	0.01	1.41	BC 9
				Min V_y	-1.64	▷ -0.04	-0.34	0.03	0.00	-0.17	BC 20
				Max V_z	-0.39	0.31	▷ 1.93	-0.03	-0.00	0.30	BC 23
				Min V_z	-5.26	1.48	▷ -4.43	-0.01	0.01	1.38	BC 12
				Max M_T	-1.64	-0.04	-0.34	▷ 0.03	0.00	-0.17	BC 20
				Min M_T	-0.39	0.31	1.93	▷ -0.03	-0.00	0.30	BC 23
				Max M_y	-5.26	1.48	-4.43	-0.01	▷ 0.01	1.38	BC 12
				Min M_y	-1.20	0.27	1.92	-0.03	▷ -0.00	0.37	BC 22
				Max M_z	-5.23	1.52	-4.41	-0.01	0.01	▷ 1.44	BC 8
				Min M_z	-0.83	-0.01	-0.32	0.03	0.00	▷ -0.24	BC 21
			0.000	Max N	▷ 0.00	0.00	0.00	0.00	0.00	0.00	
			Rechts	Min N	▷ -5.28	1.44	-4.40	-0.00	0.01	1.29	BC 10

4.12 DOORSNEDES - SNEDEKRACHTEN

Resultaatcombinaties

Staaf No.	RC	Knoop No.	Snede x [m]		Krachten [kN] N	V_y	V_z	Momenten [kNm] M_T	M_y	M_z	Bijbehorend Belastingsgeval
51	RC1			Max V_y	-4.83	1.55	-4.40	-0.01	0.01	1.41	BC 9
				Min V_y	-1.64	-0.04	-0.34	0.03	0.00	-0.17	BC 20
				Max V_z	-0.39	0.31	1.93	-0.03	-0.00	0.30	BC 23
				Min V_z	-5.26	1.48	-4.43	-0.01	0.01	1.38	BC 12
				Max M_T	-1.64	-0.04	-0.34	0.03	0.00	-0.17	BC 20
				Min M_T	-0.39	0.31	1.93	-0.03	-0.00	0.30	BC 23
				Max M_y	-5.26	1.48	-4.43	-0.01	0.01	1.38	BC 12
				Min M_y	-1.20	0.27	1.92	-0.03	-0.00	0.37	BC 22
				Max M_z	-5.23	1.52	-4.41	-0.01	0.01	1.44	BC 8
				Min M_z	-0.83	-0.01	-0.32	0.03	0.00	-0.24	BC 21
			0.583	Max N	0.00	0.00	0.00	0.00	0.00	0.00	
			Links	Min N	-4.84	1.23	-3.23	-0.00	-2.30	0.48	BC 10
				Max V_y	-4.40	1.33	-3.23	-0.01	-2.30	0.54	BC 9
				Min V_y	-1.57	-0.07	-0.23	0.03	-0.17	-0.14	BC 20
				Max V_z	-0.34	0.26	1.47	-0.03	1.04	0.12	BC 23
				Min V_z	-4.82	1.28	-3.25	-0.00	-2.31	0.54	BC 12
				Max M_T	-1.57	-0.07	-0.23	0.03	-0.17	-0.14	BC 20
				Min M_T	-0.34	0.26	1.47	-0.03	1.04	0.12	BC 23
				Max M_y	-0.34	0.26	1.47	-0.03	1.04	0.12	BC 23
				Min M_y	-4.82	1.28	-3.25	-0.00	-2.31	0.54	BC 12
				Max M_z	-4.79	1.32	-3.24	-0.01	-2.31	0.58	BC 8
				Min M_z	-0.78	-0.06	-0.21	0.03	-0.16	-0.23	BC 21
			0.583	Max N	0.00	0.00	0.00	0.00	0.00	0.00	
			Rechts	Min N	-4.84	1.23	-3.23	-0.00	-2.30	0.48	BC 10
				Max V_y	-4.40	1.32	-3.23	-0.01	-2.30	0.54	BC 9
				Min V_y	-1.57	-0.07	-0.23	0.03	-0.17	-0.14	BC 20
				Max V_z	-0.34	0.26	1.47	-0.03	1.04	0.12	BC 23
				Min V_z	-4.82	1.28	-3.25	-0.00	-2.31	0.54	BC 12
				Max M_T	-1.57	-0.07	-0.23	0.03	-0.17	-0.14	BC 20
				Min M_T	-0.34	0.26	1.47	-0.03	1.04	0.12	BC 23
				Max M_y	-0.34	0.26	1.47	-0.03	1.04	0.12	BC 23
				Min M_y	-4.82	1.28	-3.25	-0.00	-2.31	0.54	BC 12
				Max M_z	-4.79	1.32	-3.24	-0.01	-2.31	0.58	BC 8
				Min M_z	-0.78	-0.06	-0.21	0.03	-0.16	-0.23	BC 21
			0.679	Max N	0.00	0.00	0.00	0.00	0.00	0.00	
			Links	Min N	-4.70	1.16	-2.85	-0.00	-2.60	0.37	BC 10
				Max V_y	-4.26	1.25	-2.85	-0.01	-2.59	0.41	BC 9
				Min V_y	-0.77	-0.07	-0.18	0.03	-0.18	-0.22	BC 21
				Max V_z	-0.33	0.25	1.31	-0.03	1.17	0.10	BC 23
				Min V_z	-4.69	1.20	-2.88	-0.00	-2.61	0.42	BC 12
				Max M_T	-1.55	-0.07	-0.20	0.03	-0.19	-0.13	BC 20
				Min M_T	-0.33	0.25	1.31	-0.03	1.17	0.10	BC 23
				Max M_y	-0.33	0.25	1.31	-0.03	1.17	0.10	BC 23
				Min M_y	-4.69	1.20	-2.88	-0.00	-2.61	0.42	BC 12
				Max M_z	-3.72	1.00	-2.39	-0.00	-2.17	0.47	BC 2
				Min M_z	-0.77	-0.07	-0.18	0.03	-0.18	-0.22	BC 21
			0.679	Max N	0.00	0.00	0.00	0.00	0.00	0.00	
			Rechts	Min N	-4.70	1.16	-2.85	-0.00	-2.60	0.37	BC 10
				Max V_y	-4.26	1.25	-2.85	-0.01	-2.59	0.41	BC 9
				Min V_y	-0.77	-0.07	-0.18	0.03	-0.18	-0.22	BC 21
				Max V_z	-0.33	0.25	1.31	-0.03	1.17	0.10	BC 23
				Min V_z	-4.69	1.20	-2.88	-0.00	-2.61	0.42	BC 12
				Max M_T	-1.55	-0.07	-0.20	0.03	-0.19	-0.13	BC 20
				Min M_T	-0.33	0.25	1.31	-0.03	1.17	0.10	BC 23
				Max M_y	-0.33	0.25	1.31	-0.03	1.17	0.10	BC 23
				Min M_y	-4.69	1.20	-2.88	-0.00	-2.61	0.42	BC 12
				Max M_z	-3.72	1.00	-2.39	-0.00	-2.17	0.47	BC 2
				Min M_z	-0.77	-0.07	-0.18	0.03	-0.18	-0.22	BC 21
			0.707	Max N	0.00	0.00	0.00	0.00	0.00	0.00	
			Links	Min N	-4.66	1.13	-2.74	-0.00	-2.67	0.33	BC 10
				Max V_y	-4.22	1.22	-2.73	-0.01	-2.67	0.38	BC 9
				Min V_y	-0.76	-0.08	-0.17	0.03	-0.18	-0.22	BC 21
				Max V_z	-0.33	0.25	1.26	-0.03	1.21	0.09	BC 23
				Min V_z	-4.64	1.18	-2.76	-0.00	-2.69	0.38	BC 12
				Max M_T	-1.54	-0.08	-0.19	0.03	-0.20	-0.13	BC 20
				Min M_T	-0.33	0.25	1.26	-0.03	1.21	0.09	BC 23
				Max M_y	-0.33	0.25	1.26	-0.03	1.21	0.09	BC 23
				Min M_y	-4.64	1.18	-2.76	-0.00	-2.69	0.38	BC 12
				Max M_z	-3.69	0.98	-2.30	-0.00	-2.24	0.44	BC 2
				Min M_z	-0.76	-0.08	-0.17	0.03	-0.18	-0.22	BC 21
			0.707	Max N	0.00	0.00	0.00	0.00	0.00	0.00	
			Rechts	Min N	-4.66	1.13	-2.74	-0.00	-2.67	0.33	BC 10
				Max V_y	-4.22	1.22	-2.73	-0.01	-2.67	0.38	BC 9
				Min V_y	-0.76	-0.08	-0.17	0.03	-0.18	-0.22	BC 21
				Max V_z	-0.33	0.25	1.26	-0.03	1.21	0.09	BC 23
				Min V_z	-4.64	1.18	-2.76	-0.00	-2.69	0.38	BC 12
				Max M_T	-1.54	-0.08	-0.19	0.03	-0.20	-0.13	BC 20
				Min M_T	-0.33	0.25	1.26	-0.03	1.21	0.09	BC 23
				Max M_y	-0.33	0.25	1.26	-0.03	1.21	0.09	BC 23
				Min M_y	-4.64	1.18	-2.76	-0.00	-2.69	0.38	BC 12
				Max M_z	-3.69	0.98	-2.30	-0.00	-2.24	0.44	BC 2
				Min M_z	-0.76	-0.08	-0.17	0.03	-0.18	-0.22	BC 21
			2.552	Max N	0.00	0.00	0.00	0.00	0.00	0.00	
			Links	Min N	-1.80	-0.33	4.65	0.01	-0.80	-0.39	BC 10

4.12 DOORSNEDES - SNEDEKRACHTEN

Resultaatcombinaties

Staaf No.	RC	Knoop No.	Snede x [m]		Krachten [kN] N	V_y	V_z	Momenten [kNm] M_T	M_y	M_z	Bijbehorend Belastingsgeval
51	RC1			Max V_y	-1.22	▷ 0.17	1.77	0.02	-0.42	-0.26	BC 18
				Min V_y	-1.49	▷ -0.43	4.68	0.01	-0.75	-0.34	BC 11
				Max V_z	-1.49	-0.43	▷ 4.68	0.01	-0.75	-0.34	BC 11
				Min V_z	-0.80	-0.02	▷ -2.17	-0.01	0.28	-0.04	BC 14
				Max M_T	-0.49	-0.39	0.43	▷ 0.03	0.07	0.22	BC 21
				Min M_T	-0.06	-0.04	-2.09	▷ -0.04	0.44	-0.10	BC 23
				Max M_y	-0.06	-0.04	-2.09	-0.04	▷ 0.44	-0.10	BC 23
				Min M_y	-1.79	-0.27	4.63	0.00	▷ -0.85	-0.44	BC 12
				Max M_z	-0.49	-0.39	0.43	0.03	0.07	▷ 0.22	BC 21
				Min M_z	-1.71	0.03	3.85	-0.00	-0.74	▷ -0.48	BC 2
			2.552	Max N	▷ 0.00	0.00	0.00	0.00	0.00	0.00	
			Rechts	Min N	▷ -1.80	-0.33	4.65	0.01	-0.80	-0.39	BC 10
				Max V_y	-1.22	▷ 0.17	1.77	0.02	-0.42	-0.26	BC 18
				Min V_y	-1.49	▷ -0.43	4.68	0.01	-0.75	-0.34	BC 11
				Max V_z	-1.49	-0.43	▷ 4.68	0.01	-0.75	-0.34	BC 11
				Min V_z	-0.80	-0.02	▷ -2.17	-0.01	0.28	-0.04	BC 14
				Max M_T	-0.49	-0.39	0.43	▷ 0.03	0.07	0.22	BC 21
				Min M_T	-0.06	-0.04	-2.09	▷ -0.04	0.44	-0.10	BC 23
				Max M_y	-0.06	-0.04	-2.09	-0.04	▷ 0.44	-0.10	BC 23
				Min M_y	-1.79	-0.27	4.63	0.00	▷ -0.85	-0.44	BC 12
				Max M_z	-0.49	-0.39	0.43	0.03	0.07	▷ 0.22	BC 21
				Min M_z	-1.71	0.03	3.85	-0.00	-0.74	▷ -0.48	BC 2
			2.581	Max N	▷ 0.00	0.00	0.00	0.00	0.00	0.00	
			Links	Min N	▷ -1.77	-0.17	3.97	0.02	-0.57	-0.31	BC 4
				Max V_y	-1.21	▷ 0.17	1.82	0.02	-0.37	-0.27	BC 18
				Min V_y	-1.45	▷ -0.45	4.78	0.01	-0.62	-0.33	BC 11
				Max V_z	-1.45	-0.45	▷ 4.78	0.01	-0.62	-0.33	BC 11
				Min V_z	-0.79	-0.02	▷ -2.22	-0.01	0.21	-0.04	BC 14
				Max M_T	-0.48	-0.40	0.44	▷ 0.03	0.08	0.23	BC 21
				Min M_T	-0.05	-0.05	-2.14	▷ -0.04	0.38	-0.09	BC 23
				Max M_y	-0.05	-0.05	-2.14	-0.04	▷ 0.38	-0.09	BC 23
				Min M_y	-1.75	-0.29	4.74	0.00	▷ -0.71	-0.43	BC 12
				Max M_z	-0.48	-0.40	0.44	0.03	0.08	▷ 0.23	BC 21
				Min M_z	-1.68	0.01	3.94	-0.00	-0.63	▷ -0.48	BC 2
			2.581	Max N	▷ 0.00	0.00	0.00	0.00	0.00	0.00	
			Rechts	Min N	▷ -1.77	-0.17	3.97	0.02	-0.57	-0.31	BC 4
				Max V_y	-1.21	▷ 0.17	1.82	0.02	-0.37	-0.27	BC 18
				Min V_y	-1.45	▷ -0.45	4.78	0.01	-0.62	-0.33	BC 11
				Max V_z	-1.45	-0.45	▷ 4.78	0.01	-0.62	-0.33	BC 11
				Min V_z	-0.79	-0.02	▷ -2.22	-0.01	0.21	-0.04	BC 14
				Max M_T	-0.48	-0.40	0.44	▷ 0.03	0.08	0.23	BC 21
				Min M_T	-0.05	-0.05	-2.14	▷ -0.04	0.38	-0.09	BC 23
				Max M_y	-0.05	-0.05	-2.14	-0.04	▷ 0.38	-0.09	BC 23
				Min M_y	-1.75	-0.29	4.74	0.00	▷ -0.71	-0.43	BC 12
				Max M_z	-0.48	-0.40	0.44	0.03	0.08	▷ 0.23	BC 21
				Min M_z	-1.68	0.01	3.94	-0.00	-0.63	▷ -0.48	BC 2
			2.677	Max N	▷ 0.00	0.00	0.00	0.00	0.00	0.00	
			Links	Min N	▷ -1.68	-0.21	4.26	0.02	-0.17	-0.29	BC 4
				Max V_y	-1.18	▷ 0.16	1.96	0.02	-0.19	-0.28	BC 18
				Min V_y	-1.32	▷ -0.52	5.13	0.01	-0.14	-0.28	BC 11
				Max V_z	-1.32	-0.52	▷ 5.13	0.01	-0.14	-0.28	BC 11
				Min V_z	-0.77	-0.03	▷ -2.39	-0.01	-0.01	-0.04	BC 14
				Max M_T	-0.47	-0.41	0.47	▷ 0.03	0.12	0.27	BC 21
				Min M_T	-0.04	-0.06	-2.30	▷ -0.04	0.17	-0.09	BC 23
				Max M_y	-0.04	-0.06	-2.30	-0.04	▷ 0.17	-0.09	BC 23
				Min M_y	-1.65	-0.09	4.22	0.01	▷ -0.27	-0.41	BC 6
				Max M_z	-0.47	-0.41	0.47	0.03	0.12	▷ 0.27	BC 21
				Min M_z	-1.58	-0.03	4.23	-0.00	-0.23	▷ -0.48	BC 2
			2.677	Max N	▷ 0.00	0.00	0.00	0.00	0.00	0.00	
			Rechts	Min N	▷ -1.68	-0.21	4.26	0.02	-0.17	-0.29	BC 4
				Max V_y	-1.18	▷ 0.16	1.96	0.02	-0.19	-0.28	BC 18
				Min V_y	-1.32	▷ -0.52	5.13	0.01	-0.14	-0.28	BC 11
				Max V_z	-1.32	-0.52	▷ 5.13	0.01	-0.14	-0.28	BC 11
				Min V_z	-0.77	-0.03	▷ -2.39	-0.01	-0.01	-0.04	BC 14
				Max M_T	-0.47	-0.41	0.47	▷ 0.03	0.12	0.27	BC 21
				Min M_T	-0.04	-0.06	-2.30	▷ -0.04	0.17	-0.09	BC 23
				Max M_y	-0.04	-0.06	-2.30	-0.04	▷ 0.17	-0.09	BC 23
				Min M_y	-1.65	-0.09	4.22	0.01	▷ -0.27	-0.41	BC 6
				Max M_z	-0.47	-0.41	0.47	0.03	0.12	▷ 0.27	BC 21
				Min M_z	-1.58	-0.03	4.23	-0.00	-0.23	▷ -0.48	BC 2
			3.260	Max N	▷ 0.01	-0.11	-2.76	-0.04	-1.36	-0.02	BC 23
			Links	Min N	▷ -1.42	-0.34	5.08	0.02	2.63	-0.10	BC 4
				Max V_y	-1.09	▷ 0.13	2.40	0.02	1.12	-0.36	BC 18
				Min V_y	-0.98	▷ -0.71	6.06	0.01	3.22	0.11	BC 11
				Max V_z	-0.98	-0.71	▷ 6.06	0.01	3.22	0.11	BC 11
				Min V_z	-0.70	-0.05	▷ -2.85	-0.01	-1.58	-0.01	BC 14
				Max M_T	-0.42	-0.46	0.58	▷ 0.03	0.44	0.53	BC 21
				Min M_T	0.01	-0.11	-2.76	▷ -0.04	-1.36	-0.02	BC 23
				Max M_y	-0.98	-0.71	6.06	0.01	▷ 3.22	0.11	BC 11
				Min M_y	-0.70	-0.05	-2.85	-0.01	▷ -1.58	-0.01	BC 14
				Max M_z	-0.42	-0.46	0.58	0.03	0.44	▷ 0.53	BC 21
				Min M_z	-1.33	-0.15	5.05	0.00	2.55	▷ -0.40	BC 2
		66	3.260	Max N	▷ 0.01	-0.11	-2.76	-0.04	-1.36	-0.02	BC 23
			Rechts	Min N	▷ -1.42	-0.34	5.08	0.02	2.63	-0.10	BC 4

4.12 DOORSNEDES - SNEDEKRACHTEN

Resultaatcombinaties

Staaf No.	RC	Knoop No.	Snede x [m]		Krachten [kN] N	V_y	V_z	Momenten [kNm] M_T	M_y	M_z	Bijbehorend Belastingsgeval
51	RC1			Max V_y	-1.09	▷ 0.13	2.40	0.02	1.12	-0.36	BC 18
				Min V_y	-0.98	▷ -0.71	6.06	0.01	3.22	0.11	BC 11
				Max V_z	-0.98	-0.71	▷ 6.06	0.01	3.22	0.11	BC 11
				Min V_z	-0.70	-0.05	▷ -2.85	-0.01	-1.58	-0.01	BC 14
				Max M_T	-0.42	-0.46	0.58	▷ 0.03	0.44	0.53	BC 21
				Min M_T	0.01	-0.11	-2.76	▷ -0.04	-1.36	-0.02	BC 23
				Max M_y	-0.98	-0.71	6.06	0.01	▷ 3.22	0.11	BC 11
				Min M_y	-0.70	-0.05	-2.85	-0.01	▷ -1.58	-0.01	BC 14
				Max M_z	-0.42	-0.46	0.58	0.03	0.44	▷ 0.53	BC 21
				Min M_z	-1.33	-0.15	5.05	0.00	2.55	▷ -0.40	BC 2
52	RC1	170	0.000	Max N	▷ 2.36	-0.03	-0.35	0.04	0.00	-0.27	BC 21
			Links	Min N	▷ -16.14	1.52	-4.09	-0.11	0.01	1.58	BC 8
				Max V_y	-15.57	▷ 1.55	-4.08	-0.11	0.01	1.56	BC 9
				Min V_y	1.20	▷ -0.08	-0.35	0.03	0.00	-0.22	BC 20
				Max V_z	0.80	0.23	▷ 1.84	0.04	-0.00	0.18	BC 23
				Min V_z	-15.76	1.48	▷ -4.09	-0.11	0.01	1.53	BC 12
				Max M_T	2.36	-0.03	-0.35	▷ 0.04	0.00	-0.27	BC 21
				Min M_T	-15.76	1.48	-4.09	▷ -0.11	0.01	1.53	BC 12
				Max M_y	-15.76	1.48	-4.09	-0.11	▷ 0.01	1.53	BC 12
				Min M_y	-0.36	0.18	1.84	0.03	▷ -0.00	0.22	BC 22
				Max M_z	-16.14	1.52	-4.09	-0.11	0.01	▷ 1.58	BC 8
				Min M_z	2.36	-0.03	-0.35	0.04	0.00	▷ -0.27	BC 21
			0.000	Max N	▷ 2.36	-0.03	-0.35	0.04	0.00	-0.27	BC 21
			Rechts	Min N	▷ -16.14	1.52	-4.09	-0.11	0.01	1.58	BC 8
				Max V_y	-15.57	▷ 1.55	-4.08	-0.11	0.01	1.56	BC 9
				Min V_y	1.20	▷ -0.08	-0.35	0.03	0.00	-0.22	BC 20
				Max V_z	0.80	0.23	▷ 1.84	0.04	-0.00	0.18	BC 23
				Min V_z	-15.76	1.48	▷ -4.09	-0.11	0.01	1.53	BC 12
				Max M_T	2.36	-0.03	-0.35	▷ 0.04	0.00	-0.27	BC 21
				Min M_T	-15.76	1.48	-4.09	▷ -0.11	0.01	1.53	BC 12
				Max M_y	-15.76	1.48	-4.09	-0.11	▷ 0.01	1.53	BC 12
				Min M_y	-0.36	0.18	1.84	0.03	▷ -0.00	0.22	BC 22
				Max M_z	-16.14	1.52	-4.09	-0.11	0.01	▷ 1.58	BC 8
				Min M_z	2.36	-0.03	-0.35	0.04	0.00	▷ -0.27	BC 21
			0.583	Max N	▷ 2.41	-0.08	-0.24	0.04	-0.18	-0.24	BC 21
			Links	Min N	▷ -15.72	1.38	-2.96	-0.11	-2.13	0.70	BC 8
				Max V_y	-15.17	▷ 1.39	-2.96	-0.10	-2.12	0.67	BC 9
				Min V_y	1.28	▷ -0.10	-0.25	0.03	-0.18	-0.17	BC 20
				Max V_z	0.85	0.19	▷ 1.39	0.04	0.99	0.04	BC 23
				Min V_z	-15.35	1.35	▷ -2.97	-0.11	-2.13	0.67	BC 12
				Max M_T	2.41	-0.08	-0.24	▷ 0.04	-0.18	-0.24	BC 21
				Min M_T	-15.35	1.35	-2.97	▷ -0.11	-2.13	0.67	BC 12
				Max M_y	0.85	0.19	1.39	0.04	▷ 0.99	0.04	BC 23
				Min M_y	-15.72	1.38	-2.96	-0.11	▷ -2.13	0.70	BC 8
				Max M_z	-15.72	1.38	-2.96	-0.11	-2.13	▷ 0.70	BC 8
				Min M_z	2.41	-0.08	-0.24	0.04	-0.18	▷ -0.24	BC 21
			0.583	Max N	▷ 2.41	-0.08	-0.24	0.04	-0.18	-0.24	BC 21
			Rechts	Min N	▷ -15.72	1.38	-2.96	-0.11	-2.13	0.70	BC 8
				Max V_y	-15.17	▷ 1.39	-2.96	-0.10	-2.12	0.67	BC 9
				Min V_y	1.28	▷ -0.10	-0.25	0.03	-0.18	-0.17	BC 20
				Max V_z	0.85	0.19	▷ 1.39	0.04	0.99	0.04	BC 23
				Min V_z	-15.35	1.34	▷ -2.97	-0.11	-2.13	0.67	BC 12
				Max M_T	2.41	-0.08	-0.24	▷ 0.04	-0.18	-0.24	BC 21
				Min M_T	-15.35	1.34	-2.97	▷ -0.11	-2.13	0.67	BC 12
				Max M_y	0.85	0.19	1.39	0.04	▷ 0.99	0.04	BC 23
				Min M_y	-15.72	1.38	-2.96	-0.11	▷ -2.13	0.70	BC 8
				Max M_z	-15.72	1.38	-2.96	-0.11	-2.13	▷ 0.70	BC 8
				Min M_z	2.41	-0.08	-0.24	0.04	-0.18	▷ -0.24	BC 21
			0.679	Max N	▷ 2.43	-0.09	-0.21	0.04	-0.20	-0.23	BC 21
			Links	Min N	▷ -15.59	1.32	-2.60	-0.11	-2.40	0.57	BC 8
				Max V_y	-15.04	▷ 1.33	-2.59	-0.10	-2.39	0.53	BC 9
				Min V_y	1.30	▷ -0.11	-0.22	0.03	-0.20	-0.16	BC 20
				Max V_z	0.86	0.17	▷ 1.22	0.04	1.11	0.02	BC 23
				Min V_z	-15.22	1.28	▷ -2.61	-0.11	-2.39	0.54	BC 12
				Max M_T	2.43	-0.09	-0.21	▷ 0.04	-0.20	-0.23	BC 21
				Min M_T	-15.22	1.28	-2.61	▷ -0.11	-2.39	0.54	BC 12
				Max M_y	0.86	0.17	1.22	0.04	▷ 1.11	0.02	BC 23
				Min M_y	-15.59	1.32	-2.60	-0.11	▷ -2.40	0.57	BC 8
				Max M_z	-15.59	1.32	-2.60	-0.11	-2.40	▷ 0.57	BC 8
				Min M_z	2.43	-0.09	-0.21	0.04	-0.20	▷ -0.23	BC 21
			0.679	Max N	▷ 2.43	-0.09	-0.21	0.04	-0.20	-0.23	BC 21
			Rechts	Min N	▷ -15.59	1.32	-2.60	-0.11	-2.40	0.57	BC 8
				Max V_y	-15.04	▷ 1.33	-2.59	-0.10	-2.39	0.53	BC 9
				Min V_y	1.30	▷ -0.11	-0.22	0.03	-0.20	-0.16	BC 20
				Max V_z	0.86	0.17	▷ 1.22	0.04	1.11	0.02	BC 23
				Min V_z	-15.22	1.28	▷ -2.61	-0.11	-2.39	0.54	BC 12
				Max M_T	2.43	-0.09	-0.21	▷ 0.04	-0.20	-0.23	BC 21
				Min M_T	-15.22	1.28	-2.61	▷ -0.11	-2.39	0.54	BC 12
				Max M_y	0.86	0.17	1.22	0.04	▷ 1.11	0.02	BC 23
				Min M_y	-15.59	1.32	-2.60	-0.11	▷ -2.40	0.57	BC 8
				Max M_z	-15.59	1.32	-2.60	-0.11	-2.40	▷ 0.57	BC 8
				Min M_z	2.43	-0.09	-0.21	0.04	-0.20	▷ -0.23	BC 21
			0.707	Max N	▷ 2.43	-0.10	-0.20	0.04	-0.20	-0.23	BC 21
			Links	Min N	▷ -15.55	1.30	-2.49	-0.11	-2.47	0.53	BC 8

4.12 DOORSNEDES - SNEDEKRACHTEN

Resultaatcombinaties

Staaf No.	RC	Knoop No.	Snede x [m]		Krachten [kN] N	V_y	V_z	Momenten [kNm] M_T	M_y	M_z	Bijbehorend Belastingsgeval
52	RC1			Max V_y	-15.00	▷ 1.31	-2.48	-0.10	-2.46	0.50	BC 9
				Min V_y	1.31	▷ -0.11	-0.21	0.03	-0.21	-0.16	BC 20
				Max V_z	0.86	0.17	▷ 1.17	0.04	1.15	0.02	BC 23
				Min V_z	-15.18	1.26	▷ -2.50	-0.11	-2.47	0.50	BC 12
				Max M_T	2.43	-0.10	-0.20	▷ 0.04	-0.20	-0.23	BC 21
				Min M_T	-15.18	1.26	-2.50	▷ -0.11	-2.47	0.50	BC 12
				Max M_y	0.86	0.17	1.17	0.04	▷ 1.15	0.02	BC 23
				Min M_y	-15.55	1.30	-2.49	-0.11	▷ -2.47	0.53	BC 8
				Max M_z	-15.55	1.30	-2.49	-0.11	-2.47	▷ 0.53	BC 8
				Min M_z	2.43	-0.10	-0.20	0.04	-0.20	▷ -0.23	BC 21
			0.707	Max N	▷ 2.43	-0.10	-0.20	0.04	-0.20	-0.23	BC 21
			Rechts	Min N	▷ -15.55	1.30	-2.49	-0.11	-2.47	0.53	BC 8
				Max V_y	-15.00	▷ 1.31	-2.48	-0.10	-2.46	0.50	BC 9
				Min V_y	1.31	▷ -0.11	-0.21	0.03	-0.21	-0.16	BC 20
				Max V_z	0.86	0.17	▷ 1.17	0.04	1.15	0.02	BC 23
				Min V_z	-15.18	1.26	▷ -2.50	-0.11	-2.47	0.50	BC 12
				Max M_T	2.43	-0.10	-0.20	▷ 0.04	-0.20	-0.23	BC 21
				Min M_T	-15.18	1.26	-2.50	▷ -0.11	-2.47	0.50	BC 12
				Max M_y	0.86	0.17	1.17	0.04	▷ 1.15	0.02	BC 23
				Min M_y	-15.55	1.30	-2.49	-0.11	▷ -2.47	0.53	BC 8
				Max M_z	-15.55	1.30	-2.49	-0.11	-2.47	▷ 0.53	BC 8
				Min M_z	2.43	-0.10	-0.20	0.04	-0.20	▷ -0.23	BC 21
			2.552	Max N	▷ 2.71	-0.41	0.40	0.04	-0.02	0.24	BC 21
			Links	Min N	▷ -12.89	-0.10	4.59	-0.10	-0.40	-0.59	BC 8
				Max V_y	-6.54	▷ 0.23	1.87	-0.05	-0.21	-0.33	BC 18
				Min V_y	2.71	▷ -0.41	0.40	0.04	-0.02	0.24	BC 21
				Max V_z	-12.42	-0.18	▷ 4.61	-0.10	-0.38	-0.56	BC 9
				Min V_z	1.62	-0.08	▷ -2.22	0.02	0.14	0.02	BC 14
				Max M_T	2.71	-0.41	0.40	▷ 0.04	-0.02	0.24	BC 21
				Min M_T	-12.52	-0.12	4.59	▷ -0.11	-0.41	-0.57	BC 12
				Max M_y	1.13	-0.12	-2.17	0.03	▷ 0.22	-0.03	BC 23
				Min M_y	-12.52	-0.12	4.59	-0.11	▷ -0.41	-0.57	BC 12
				Max M_z	2.71	-0.41	0.40	0.04	-0.02	▷ 0.24	BC 21
				Min M_z	-12.89	-0.10	4.59	-0.10	-0.40	▷ -0.59	BC 8
			2.552	Max N	▷ 2.71	-0.41	0.40	0.04	-0.02	0.24	BC 21
			Rechts	Min N	▷ -12.89	-0.10	4.59	-0.10	-0.40	-0.59	BC 8
				Max V_y	-6.54	▷ 0.23	1.87	-0.05	-0.21	-0.33	BC 18
				Min V_y	2.71	▷ -0.41	0.40	0.04	-0.02	0.24	BC 21
				Max V_z	-12.42	-0.18	▷ 4.61	-0.10	-0.38	-0.56	BC 9
				Min V_z	1.62	-0.08	▷ -2.22	0.02	0.14	0.02	BC 14
				Max M_T	2.71	-0.41	0.40	▷ 0.04	-0.02	0.24	BC 21
				Min M_T	-12.52	-0.12	4.59	▷ -0.11	-0.41	-0.57	BC 12
				Max M_y	1.13	-0.12	-2.17	0.03	▷ 0.22	-0.03	BC 23
				Min M_y	-12.52	-0.12	4.59	-0.11	▷ -0.41	-0.57	BC 12
				Max M_z	2.71	-0.41	0.40	0.04	-0.02	▷ 0.24	BC 21
				Min M_z	-12.89	-0.10	4.59	-0.10	-0.40	▷ -0.59	BC 8
			2.581	Max N	▷ 2.71	-0.41	0.41	0.04	-0.01	0.25	BC 21
			Links	Min N	▷ -12.85	-0.12	4.70	-0.10	-0.27	-0.59	BC 8
				Max V_y	-6.53	▷ 0.23	1.92	-0.05	-0.15	-0.33	BC 18
				Min V_y	2.71	▷ -0.41	0.41	0.04	-0.01	0.25	BC 21
				Max V_z	-12.38	-0.20	▷ 4.71	-0.10	-0.25	-0.55	BC 9
				Min V_z	1.63	-0.08	▷ -2.27	0.02	0.07	0.02	BC 14
				Max M_T	2.71	-0.41	0.41	▷ 0.04	-0.01	0.25	BC 21
				Min M_T	-12.48	-0.14	4.69	▷ -0.11	-0.28	-0.57	BC 12
				Max M_y	1.14	-0.12	-2.22	0.03	▷ 0.16	-0.02	BC 23
				Min M_y	-12.48	-0.14	4.69	-0.11	▷ -0.28	-0.57	BC 12
				Max M_z	2.71	-0.41	0.41	0.04	-0.01	▷ 0.25	BC 21
				Min M_z	-12.85	-0.12	4.70	-0.10	-0.27	▷ -0.59	BC 8
			2.581	Max N	▷ 2.71	-0.41	0.41	0.04	-0.01	0.25	BC 21
			Rechts	Min N	▷ -12.85	-0.12	4.70	-0.10	-0.27	-0.59	BC 8
				Max V_y	-6.53	▷ 0.23	1.92	-0.05	-0.15	-0.33	BC 18
				Min V_y	2.71	▷ -0.41	0.41	0.04	-0.01	0.25	BC 21
				Max V_z	-12.38	-0.20	▷ 4.71	-0.10	-0.25	-0.55	BC 9
				Min V_z	1.63	-0.08	▷ -2.27	0.02	0.07	0.02	BC 14
				Max M_T	2.71	-0.41	0.41	▷ 0.04	-0.01	0.25	BC 21
				Min M_T	-12.48	-0.14	4.69	▷ -0.11	-0.28	-0.57	BC 12
				Max M_y	1.14	-0.12	-2.22	0.03	▷ 0.16	-0.02	BC 23
				Min M_y	-12.48	-0.14	4.69	-0.11	▷ -0.28	-0.57	BC 12
				Max M_z	2.71	-0.41	0.41	0.04	-0.01	▷ 0.25	BC 21
				Min M_z	-12.85	-0.12	4.70	-0.10	-0.27	▷ -0.59	BC 8
			2.677	Max N	▷ 2.73	-0.43	0.44	0.04	0.03	0.29	BC 21
			Links	Min N	▷ -12.73	-0.19	5.02	-0.10	0.20	-0.57	BC 8
				Max V_y	-6.50	▷ 0.22	2.06	-0.05	0.04	-0.35	BC 18
				Min V_y	2.73	▷ -0.43	0.44	0.04	0.03	0.29	BC 21
				Max V_z	-12.25	-0.28	▷ 5.03	-0.10	0.22	-0.53	BC 9
				Min V_z	1.65	-0.09	▷ -2.43	0.02	-0.15	0.03	BC 14
				Max M_T	2.73	-0.43	0.44	▷ 0.04	0.03	0.29	BC 21
				Min M_T	-12.36	-0.21	5.01	▷ -0.11	0.18	-0.55	BC 12
				Max M_y	-12.25	-0.28	5.03	-0.10	▷ 0.22	-0.53	BC 9
				Min M_y	1.65	-0.09	-2.43	0.02	▷ -0.15	0.03	BC 14
				Max M_z	2.73	-0.43	0.44	0.04	0.03	▷ 0.29	BC 21
				Min M_z	-11.70	0.07	4.25	-0.09	0.15	▷ -0.59	BC 2
			2.677	Max N	▷ 2.73	-0.43	0.44	0.04	0.03	0.29	BC 21
			Rechts	Min N	▷ -12.73	-0.19	5.02	-0.10	0.20	-0.57	BC 8

4.12 DOORSNEDES - SNEDEKRACHTEN

Resultaatcombinaties

Staaf No.	RC	Knoop No.	Snede x [m]		Krachten [kN] N	V_y	V_z	Momenten [kNm] M_T	M_y	M_z	Bijbehorend Belastingsgeval
52	RC1			Max V_y	-6.50	▷ 0.22	2.06	-0.05	0.04	-0.35	BC 18
				Min V_y	2.73	▷ -0.43	0.44	0.04	0.03	0.29	BC 21
				Max V_z	-12.25	-0.28	▷ 5.03	-0.10	0.22	-0.53	BC 9
				Min V_z	1.65	-0.09	▷ -2.43	0.02	-0.15	0.03	BC 14
				Max M_T	2.73	-0.43	0.44	▷ 0.04	0.03	0.29	BC 21
				Min M_T	-12.36	-0.21	5.01	▷ -0.11	0.19	-0.55	BC 12
				Max M_y	-12.25	-0.28	5.03	-0.10	▷ 0.22	-0.53	BC 9
				Min M_y	1.65	-0.09	-2.43	0.02	▷ -0.15	0.03	BC 14
				Max M_z	2.73	-0.43	0.44	0.04	0.03	▷ 0.29	BC 21
				Min M_z	-11.70	0.07	4.25	-0.09	0.15	▷ -0.59	BC 2
			3.260	Max N	▷ 2.78	-0.49	0.55	0.04	0.33	0.56	BC 21
			Links	Min N	▷ -12.40	-0.37	5.86	-0.10	3.46	-0.38	BC 8
				Max V_y	-6.41	▷ 0.17	2.50	-0.05	1.40	-0.46	BC 18
				Min V_y	-10.62	▷ -0.56	5.87	-0.08	3.49	-0.12	BC 11
				Max V_z	-11.94	-0.47	▷ 5.87	-0.10	3.49	-0.28	BC 9
				Min V_z	1.72	-0.12	▷ -2.90	0.02	-1.76	0.09	BC 14
				Max M_T	2.78	-0.49	0.55	▷ 0.04	0.33	0.56	BC 21
				Min M_T	-12.03	-0.39	5.85	▷ -0.11	3.44	-0.34	BC 12
				Max M_y	-11.94	-0.47	5.87	-0.10	▷ 3.49	-0.28	BC 9
				Min M_y	1.72	-0.12	-2.90	0.02	▷ -1.76	0.09	BC 14
				Max M_z	2.78	-0.49	0.55	0.04	0.33	▷ 0.56	BC 21
				Min M_z	-11.46	-0.07	5.01	-0.09	2.93	▷ -0.57	BC 2
		67	3.260	Max N	▷ 2.78	-0.49	0.55	0.04	0.33	0.56	BC 21
			Rechts	Min N	▷ -12.40	-0.37	5.86	-0.10	3.46	-0.38	BC 8
				Max V_y	-6.41	▷ 0.17	2.50	-0.05	1.40	-0.46	BC 18
				Min V_y	-10.62	▷ -0.56	5.87	-0.08	3.49	-0.12	BC 11
				Max V_z	-11.94	-0.47	▷ 5.87	-0.10	3.49	-0.28	BC 9
				Min V_z	1.72	-0.12	▷ -2.90	0.02	-1.76	0.09	BC 14
				Max M_T	2.78	-0.49	0.55	▷ 0.04	0.33	0.56	BC 21
				Min M_T	-12.03	-0.39	5.85	▷ -0.11	3.44	-0.34	BC 12
				Max M_y	-11.94	-0.47	5.87	-0.10	▷ 3.49	-0.28	BC 9
				Min M_y	1.72	-0.12	-2.90	0.02	▷ -1.76	0.09	BC 14
				Max M_z	2.78	-0.49	0.55	0.04	0.33	▷ 0.56	BC 21
				Min M_z	-11.46	-0.07	5.01	-0.09	2.93	▷ -0.57	BC 2
53	RC1	184	0.000	Max N	▷ 3.89	-0.30	1.78	0.03	0.00	-0.46	BC 15
			Links	Min N	▷ -16.86	1.66	-4.16	-0.14	0.01	1.83	BC 8
				Max V_y	-16.86	▷ 1.66	-4.16	-0.14	0.01	1.83	BC 8
				Min V_y	3.89	▷ -0.30	1.78	0.03	0.00	-0.46	BC 15
				Max V_z	3.06	-0.21	▷ 1.78	0.02	0.00	-0.44	BC 14
				Min V_z	-16.86	1.66	▷ -4.16	-0.14	0.01	1.83	BC 8
				Max M_T	3.89	-0.30	1.78	▷ 0.03	0.00	-0.46	BC 15
				Min M_T	-16.86	1.66	-4.16	▷ -0.14	0.01	1.83	BC 8
				Max M_y	-16.44	1.61	-4.16	-0.14	▷ 0.01	1.82	BC 9
				Min M_y	-0.14	-0.11	-0.41	-0.02	▷ -0.00	-0.18	BC 23
				Max M_z	-16.86	1.66	-4.16	-0.14	0.01	▷ 1.83	BC 8
				Min M_z	3.89	-0.30	1.78	0.03	0.00	▷ -0.46	BC 15
			0.000	Max N	▷ 3.89	-0.30	1.78	0.03	0.00	-0.46	BC 15
			Rechts	Min N	▷ -16.86	1.66	-4.16	-0.14	0.01	1.83	BC 8
				Max V_y	-16.86	▷ 1.66	-4.16	-0.14	0.01	1.83	BC 8
				Min V_y	3.89	▷ -0.30	1.78	0.03	0.00	-0.46	BC 15
				Max V_z	3.06	-0.21	▷ 1.78	0.02	0.00	-0.44	BC 14
				Min V_z	-16.86	1.66	▷ -4.16	-0.14	0.01	1.83	BC 8
				Max M_T	3.89	-0.30	1.78	▷ 0.03	0.00	-0.46	BC 15
				Min M_T	-16.86	1.66	-4.16	▷ -0.14	0.01	1.83	BC 8
				Max M_y	-16.44	1.61	-4.16	-0.14	▷ 0.01	1.82	BC 9
				Min M_y	-0.14	-0.11	-0.41	-0.02	▷ -0.00	-0.18	BC 23
				Max M_z	-16.86	1.66	-4.16	-0.14	0.01	▷ 1.83	BC 8
				Min M_z	3.89	-0.30	1.78	0.03	0.00	▷ -0.46	BC 15
			0.583	Max N	▷ 3.93	-0.29	1.34	0.03	0.95	-0.29	BC 15
			Links	Min N	▷ -16.47	1.54	-3.03	-0.14	-2.17	0.86	BC 8
				Max V_y	-16.47	▷ 1.54	-3.03	-0.14	-2.17	0.86	BC 8
				Min V_y	3.93	▷ -0.29	1.34	0.03	0.95	-0.29	BC 15
				Max V_z	3.08	-0.23	▷ 1.34	0.02	0.96	-0.32	BC 14
				Min V_z	-16.47	1.54	▷ -3.03	-0.14	-2.17	0.86	BC 8
				Max M_T	3.93	-0.29	1.34	▷ 0.03	0.95	-0.29	BC 15
				Min M_T	-16.47	1.54	-3.03	▷ -0.14	-2.17	0.86	BC 8
				Max M_y	3.08	-0.23	1.34	0.02	▷ 0.96	-0.32	BC 14
				Min M_y	-16.47	1.54	-3.03	-0.14	▷ -2.17	0.86	BC 8
				Max M_z	-16.04	1.50	-3.03	-0.13	-2.16	▷ 0.88	BC 9
				Min M_z	3.08	-0.23	1.34	0.02	0.96	▷ -0.32	BC 14
			0.583	Max N	▷ 3.93	-0.29	1.34	0.03	0.95	-0.29	BC 15
			Rechts	Min N	▷ -16.47	1.54	-3.03	-0.14	-2.17	0.86	BC 8
				Max V_y	-16.47	▷ 1.54	-3.03	-0.14	-2.17	0.86	BC 8
				Min V_y	3.93	▷ -0.29	1.34	0.03	0.95	-0.29	BC 15
				Max V_z	3.08	-0.23	▷ 1.34	0.02	0.96	-0.32	BC 14
				Min V_z	-16.47	1.54	▷ -3.03	-0.14	-2.17	0.86	BC 8
				Max M_T	3.93	-0.29	1.34	▷ 0.03	0.95	-0.29	BC 15
				Min M_T	-16.47	1.54	-3.03	▷ -0.14	-2.17	0.86	BC 8
				Max M_y	3.08	-0.23	1.34	0.02	▷ 0.96	-0.32	BC 14
				Min M_y	-16.47	1.54	-3.03	-0.14	▷ -2.17	0.86	BC 8
				Max M_z	-16.04	1.50	-3.03	-0.13	-2.16	▷ 0.88	BC 9
				Min M_z	3.08	-0.23	1.34	0.02	0.96	▷ -0.32	BC 14
			0.679	Max N	▷ 3.95	-0.29	1.18	0.03	1.08	-0.26	BC 15
			Links	Min N	▷ -16.35	1.48	-2.66	-0.14	-2.44	0.72	BC 8

4.12 DOORSNEDES - SNEDEKRACHTEN

Resultaatcombinaties

Staaf No.	RC	Knoop No.	Snede x [m]		Krachten [kN] N	V_y	V_z	Momenten [kNm] M_T	M_y	M_z	Bijbehorend Belastingsgeval
53	RC1			Max V_y	-16.35	▷ 1.48	-2.66	-0.14	-2.44	0.72	BC 8
				Min V_y	3.95	▷ -0.29	1.18	0.03	1.08	-0.26	BC 15
				Max V_z	3.09	-0.24	▷ 1.18	0.02	1.08	-0.30	BC 14
				Min V_z	-15.91	1.45	▷ -2.66	-0.13	-2.44	0.73	BC 9
				Max M_T	3.95	-0.29	1.18	▷ 0.03	1.08	-0.26	BC 15
				Min M_T	-16.35	1.48	-2.66	▷ -0.14	-2.44	0.72	BC 8
				Max M_y	3.09	-0.24	1.18	0.02	▷ 1.08	-0.30	BC 14
				Min M_y	-16.35	1.48	-2.66	-0.14	▷ -2.44	0.72	BC 8
				Max M_z	-15.91	1.45	-2.66	-0.13	-2.44	▷ 0.73	BC 9
				Min M_z	3.09	-0.24	1.18	0.02	1.08	▷ -0.30	BC 14
			0.679	Max N	▷ 3.95	-0.29	1.18	0.03	1.08	-0.26	BC 15
			Rechts	Min N	▷ -16.35	1.48	-2.66	-0.14	-2.44	0.72	BC 8
				Max V_y	-16.35	▷ 1.48	-2.66	-0.14	-2.44	0.72	BC 8
				Min V_y	3.95	▷ -0.29	1.18	0.03	1.08	-0.26	BC 15
				Max V_z	3.09	-0.24	▷ 1.18	0.02	1.08	-0.30	BC 14
				Min V_z	-15.91	1.45	▷ -2.66	-0.13	-2.44	0.73	BC 9
				Max M_T	3.95	-0.29	1.18	▷ 0.03	1.08	-0.26	BC 15
				Min M_T	-16.35	1.48	-2.66	▷ -0.14	-2.44	0.72	BC 8
				Max M_y	3.09	-0.24	1.18	0.02	▷ 1.08	-0.30	BC 14
				Min M_y	-16.35	1.48	-2.66	-0.14	▷ -2.44	0.72	BC 8
				Max M_z	-15.91	1.45	-2.66	-0.13	-2.44	▷ 0.73	BC 9
				Min M_z	3.09	-0.24	1.18	0.02	1.08	▷ -0.30	BC 14
			0.707	Max N	▷ 3.95	-0.29	1.13	0.03	1.11	-0.25	BC 15
			Links	Min N	▷ -16.31	1.46	-2.55	-0.14	-2.51	0.67	BC 8
				Max V_y	-16.31	▷ 1.46	-2.55	-0.14	-2.51	0.67	BC 8
				Min V_y	3.95	▷ -0.29	1.13	0.03	1.11	-0.25	BC 15
				Max V_z	3.09	-0.24	▷ 1.13	0.02	1.11	-0.29	BC 14
				Min V_z	-15.87	1.43	▷ -2.55	-0.13	-2.51	0.69	BC 9
				Max M_T	3.95	-0.29	1.13	▷ 0.03	1.11	-0.25	BC 15
				Min M_T	-16.31	1.46	-2.55	▷ -0.14	-2.51	0.67	BC 8
				Max M_y	3.09	-0.24	1.13	0.02	▷ 1.11	-0.29	BC 14
				Min M_y	-16.31	1.46	-2.55	-0.14	▷ -2.51	0.67	BC 8
				Max M_z	-15.87	1.43	-2.55	-0.13	-2.51	▷ 0.69	BC 9
				Min M_z	3.09	-0.24	1.13	0.02	1.11	▷ -0.29	BC 14
			0.707	Max N	▷ 3.95	-0.29	1.13	0.03	1.11	-0.25	BC 15
			Rechts	Min N	▷ -16.31	1.46	-2.55	-0.14	-2.51	0.67	BC 8
				Max V_y	-16.31	▷ 1.46	-2.55	-0.14	-2.51	0.67	BC 8
				Min V_y	3.95	▷ -0.29	1.13	0.03	1.11	-0.25	BC 15
				Max V_z	3.09	-0.24	▷ 1.13	0.02	1.11	-0.29	BC 14
				Min V_z	-15.87	1.43	▷ -2.55	-0.13	-2.51	0.69	BC 9
				Max M_T	3.95	-0.29	1.13	▷ 0.03	1.11	-0.25	BC 15
				Min M_T	-16.31	1.46	-2.55	▷ -0.14	-2.51	0.67	BC 8
				Max M_y	3.09	-0.24	1.13	0.02	▷ 1.11	-0.29	BC 14
				Min M_y	-16.31	1.46	-2.55	-0.14	▷ -2.51	0.67	BC 8
				Max M_z	-15.87	1.43	-2.55	-0.13	-2.51	▷ 0.69	BC 9
				Min M_z	3.09	-0.24	1.13	0.02	1.11	▷ -0.29	BC 14
			2.552	Max N	▷ 4.23	-0.28	-2.11	0.03	0.20	0.27	BC 15
			Links	Min N	▷ -13.82	0.04	4.62	-0.13	-0.47	-0.74	BC 8
				Max V_y	-10.87	▷ 0.24	3.93	-0.11	-0.41	-0.61	BC 3
				Min V_y	3.22	▷ -0.40	-2.09	0.02	0.23	0.30	BC 14
				Max V_z	-13.82	0.04	▷ 4.62	-0.13	-0.47	-0.74	BC 8
				Min V_z	2.79	-0.01	▷ -2.15	0.02	0.14	0.02	BC 21
				Max M_T	4.23	-0.28	-2.11	▷ 0.03	0.20	0.27	BC 15
				Min M_T	-13.82	0.04	4.62	▷ -0.13	-0.47	-0.74	BC 8
				Max M_y	3.22	-0.40	-2.09	0.02	▷ 0.23	0.30	BC 14
				Min M_y	-13.30	0.11	4.60	-0.13	▷ -0.49	-0.76	BC 9
				Max M_z	3.22	-0.40	-2.09	0.02	0.23	▷ 0.30	BC 14
				Min M_z	-13.30	0.11	4.60	-0.13	-0.49	▷ -0.76	BC 9
			2.552	Max N	▷ 4.23	-0.28	-2.11	0.03	0.20	0.27	BC 15
			Rechts	Min N	▷ -13.82	0.04	4.62	-0.13	-0.47	-0.74	BC 8
				Max V_y	-10.87	▷ 0.24	3.93	-0.11	-0.41	-0.61	BC 3
				Min V_y	3.22	▷ -0.40	-2.09	0.02	0.23	0.30	BC 14
				Max V_z	-13.82	0.04	▷ 4.62	-0.13	-0.47	-0.74	BC 8
				Min V_z	2.79	-0.01	▷ -2.15	0.02	0.13	0.02	BC 21
				Max M_T	4.23	-0.28	-2.11	▷ 0.03	0.20	0.27	BC 15
				Min M_T	-13.82	0.04	4.62	▷ -0.13	-0.47	-0.74	BC 8
				Max M_y	3.22	-0.40	-2.09	0.02	▷ 0.23	0.30	BC 14
				Min M_y	-13.30	0.11	4.60	-0.13	▷ -0.49	-0.76	BC 9
				Max M_z	3.22	-0.40	-2.09	0.02	0.23	▷ 0.30	BC 14
				Min M_z	-13.30	0.11	4.60	-0.13	-0.49	▷ -0.76	BC 9
			2.581	Max N	▷ 4.23	-0.28	-2.16	0.03	0.14	0.27	BC 15
			Links	Min N	▷ -13.78	0.02	4.73	-0.13	-0.34	-0.74	BC 8
				Max V_y	-3.50	▷ 0.23	0.66	-0.03	-0.09	-0.26	BC 17
				Min V_y	3.22	▷ -0.40	-2.14	0.02	0.17	0.31	BC 14
				Max V_z	-13.78	0.02	▷ 4.73	-0.13	-0.34	-0.74	BC 8
				Min V_z	2.79	-0.01	▷ -2.20	0.02	0.07	0.02	BC 21
				Max M_T	4.23	-0.28	-2.16	▷ 0.03	0.14	0.27	BC 15
				Min M_T	-13.78	0.02	4.73	▷ -0.13	-0.34	-0.74	BC 8
				Max M_y	3.22	-0.40	-2.14	0.02	▷ 0.17	0.31	BC 14
				Min M_y	-13.26	0.09	4.71	-0.13	▷ -0.36	-0.76	BC 9
				Max M_z	3.22	-0.40	-2.14	0.02	0.17	▷ 0.31	BC 14
				Min M_z	-13.26	0.09	4.71	-0.13	-0.36	▷ -0.76	BC 9
			2.581	Max N	▷ 4.23	-0.28	-2.16	0.03	0.14	0.27	BC 15
			Rechts	Min N	▷ -13.78	0.02	4.73	-0.13	-0.34	-0.74	BC 8

4.12 DOORSNEDES - SNEDEKRACHTEN

Resultaatcombinaties

Staaf No.	RC	Knoop No.	Snede x [m]		Krachten [kN] N	V_y	V_z	Momenten [kNm] M_T	M_y	M_z	Bijbehorend Belastingsgeval
53	RC1			Max V_y	-3.50	▷ 0.23	0.66	-0.03	-0.09	-0.26	BC 17
				Min V_y	3.22	▷ -0.40	-2.14	0.02	0.17	0.31	BC 14
				Max V_z	-13.78	0.02	▷ 4.73	-0.13	-0.34	-0.74	BC 8
				Min V_z	2.79	-0.01	▷ -2.20	0.02	0.07	0.02	BC 21
				Max M_T	4.23	-0.28	-2.16	▷ 0.03	0.14	0.27	BC 15
				Min M_T	-13.78	0.02	4.73	▷ -0.13	-0.34	-0.74	BC 8
				Max M_y	3.22	-0.40	-2.14	0.02	▷ 0.17	0.31	BC 14
				Min M_y	-13.26	0.09	4.71	-0.13	▷ -0.36	-0.76	BC 9
				Max M_z	3.22	-0.40	-2.14	0.02	0.17	▷ 0.31	BC 14
				Min M_z	-13.26	0.09	4.71	-0.13	-0.36	▷ -0.76	BC 9
			2.677	Max N	▷ 4.25	-0.28	-2.32	0.03	-0.08	0.30	BC 15
			Links	Min N	▷ -13.66	-0.05	5.05	-0.13	0.13	-0.73	BC 8
				Max V_y	-3.47	▷ 0.23	0.71	-0.03	-0.02	-0.28	BC 17
				Min V_y	3.22	▷ -0.41	-2.30	0.02	-0.04	0.35	BC 14
				Max V_z	-13.66	-0.05	▷ 5.05	-0.13	0.13	-0.73	BC 8
				Min V_z	2.81	-0.01	▷ -2.36	0.02	-0.15	0.02	BC 21
				Max M_T	4.25	-0.28	-2.32	▷ 0.03	-0.08	0.30	BC 15
				Min M_T	-13.66	-0.05	5.05	▷ -0.13	0.13	-0.73	BC 8
				Max M_y	-11.80	0.04	4.34	-0.11	▷ 0.14	-0.58	BC 2
				Min M_y	2.81	-0.01	-2.36	0.02	▷ -0.15	0.02	BC 21
				Max M_z	3.22	-0.41	-2.30	0.02	-0.04	▷ 0.35	BC 14
				Min M_z	-13.14	0.02	5.03	-0.13	0.11	▷ -0.76	BC 9
			2.677	Max N	▷ 4.25	-0.28	-2.32	0.03	-0.08	0.30	BC 15
			Rechts	Min N	▷ -13.66	-0.05	5.05	-0.13	0.13	-0.73	BC 8
				Max V_y	-3.47	▷ 0.23	0.71	-0.03	-0.02	-0.28	BC 17
				Min V_y	3.22	▷ -0.41	-2.30	0.02	-0.04	0.35	BC 14
				Max V_z	-13.66	-0.05	▷ 5.05	-0.13	0.13	-0.73	BC 8
				Min V_z	2.81	-0.01	▷ -2.36	0.02	-0.15	0.02	BC 21
				Max M_T	4.25	-0.28	-2.32	▷ 0.03	-0.08	0.30	BC 15
				Min M_T	-13.66	-0.05	5.05	▷ -0.13	0.13	-0.73	BC 8
				Max M_y	-11.80	0.04	4.34	-0.11	▷ 0.14	-0.58	BC 2
				Min M_y	2.81	-0.01	-2.36	0.02	▷ -0.15	0.02	BC 21
				Max M_z	3.22	-0.41	-2.30	0.02	-0.04	▷ 0.35	BC 14
				Min M_z	-13.14	0.02	5.03	-0.13	0.11	▷ -0.76	BC 9
			3.260	Max N	▷ 4.30	-0.29	-2.78	0.03	-1.61	0.47	BC 15
			Links	Min N	▷ -13.36	-0.26	5.90	-0.13	3.41	-0.62	BC 8
				Max V_y	-3.40	▷ 0.20	0.88	-0.03	0.45	-0.40	BC 17
				Min V_y	3.25	▷ -0.45	-2.74	0.02	-1.56	0.60	BC 14
				Max V_z	-13.36	-0.26	▷ 5.90	-0.13	3.41	-0.62	BC 8
				Min V_z	2.85	-0.02	▷ -2.81	0.02	-1.70	0.03	BC 21
				Max M_T	4.30	-0.29	-2.78	▷ 0.03	-1.61	0.47	BC 15
				Min M_T	-13.36	-0.26	5.90	▷ -0.13	3.41	-0.62	BC 8
				Max M_y	-13.36	-0.26	5.90	-0.13	▷ 3.41	-0.62	BC 8
				Min M_y	2.85	-0.02	-2.81	0.02	▷ -1.70	0.03	BC 21
				Max M_z	3.25	-0.45	-2.74	0.02	-1.56	▷ 0.60	BC 14
				Min M_z	-12.83	-0.17	5.88	-0.13	3.38	▷ -0.69	BC 9
		70	3.260	Max N	▷ 4.30	-0.29	-2.78	0.03	-1.61	0.47	BC 15
			Rechts	Min N	▷ -13.36	-0.26	5.90	-0.13	3.41	-0.62	BC 8
				Max V_y	-3.40	▷ 0.20	0.88	-0.03	0.45	-0.40	BC 17
				Min V_y	3.25	▷ -0.45	-2.74	0.02	-1.56	0.60	BC 14
				Max V_z	-13.36	-0.26	▷ 5.90	-0.13	3.41	-0.62	BC 8
				Min V_z	2.85	-0.02	▷ -2.81	0.02	-1.70	0.03	BC 21
				Max M_T	4.30	-0.29	-2.78	▷ 0.03	-1.61	0.47	BC 15
				Min M_T	-13.36	-0.26	5.90	▷ -0.13	3.41	-0.62	BC 8
				Max M_y	-13.36	-0.26	5.90	-0.13	▷ 3.41	-0.62	BC 8
				Min M_y	2.85	-0.02	-2.81	0.02	▷ -1.70	0.03	BC 21
				Max M_z	3.25	-0.45	-2.74	0.02	-1.56	▷ 0.60	BC 14
				Min M_z	-12.83	-0.17	5.88	-0.13	3.38	▷ -0.69	BC 9
54	RC1	182	0.000	Max N	▷ 0.00	0.00	0.00	0.00	0.00	0.00	
			Links	Min N	▷ -4.89	1.66	-4.50	-0.04	0.01	1.65	BC 8
				Max V_y	-4.89	▷ 1.66	-4.50	-0.04	0.01	1.65	BC 8
				Min V_y	-0.61	▷ -0.25	1.87	-0.00	0.00	-0.41	BC 15
				Max V_z	-0.75	-0.18	▷ 1.88	-0.02	0.00	-0.42	BC 14
				Min V_z	-4.83	1.62	▷ -4.51	-0.04	0.01	1.66	BC 9
				Max M_T	-0.86	-0.17	-0.44	▷ 0.03	-0.00	-0.27	BC 23
				Min M_T	-4.85	1.65	-3.92	▷ -0.05	0.01	1.62	BC 12
				Max M_y	-4.83	1.62	-4.51	-0.04	▷ 0.01	1.66	BC 9
				Min M_y	-0.86	-0.17	-0.44	0.03	▷ -0.00	-0.27	BC 23
				Max M_z	-4.83	1.62	-4.51	-0.04	0.01	▷ 1.66	BC 9
				Min M_z	-0.75	-0.18	1.88	-0.02	0.00	▷ -0.42	BC 14
			0.000	Max N	▷ 0.00	0.00	0.00	0.00	0.00	0.00	
			Rechts	Min N	▷ -4.89	1.66	-4.50	-0.04	0.01	1.65	BC 8
				Max V_y	-4.89	▷ 1.66	-4.50	-0.04	0.01	1.65	BC 8
				Min V_y	-0.61	▷ -0.25	1.87	-0.00	0.00	-0.41	BC 15
				Max V_z	-0.75	-0.18	▷ 1.88	-0.02	0.00	-0.42	BC 14
				Min V_z	-4.83	1.62	▷ -4.51	-0.04	0.01	1.66	BC 9
				Max M_T	-0.86	-0.17	-0.44	▷ 0.03	-0.00	-0.27	BC 23
				Min M_T	-4.85	1.65	-3.92	▷ -0.05	0.01	1.62	BC 12
				Max M_y	-4.83	1.62	-4.51	-0.04	▷ 0.01	1.66	BC 9
				Min M_y	-0.86	-0.17	-0.44	0.03	▷ -0.00	-0.27	BC 23
				Max M_z	-4.83	1.62	-4.51	-0.04	0.01	▷ 1.66	BC 9
				Min M_z	-0.75	-0.18	1.88	-0.02	0.00	▷ -0.42	BC 14
			0.583	Max N	▷ 0.00	0.00	0.00	0.00	0.00	0.00	
			Links	Min N	▷ -4.48	1.45	-3.32	-0.04	-2.36	0.71	BC 8

4.12 DOORSNEDES - SNEDEKRACHTEN

Resultaatcombinaties

Staaf No.	RC	Knoop No.	Snede x [m]		Krachten [kN] N	V_y	V_z	Momenten [kNm] M_T	M_y	M_z	Bijbehorend Belastingsgeval
54	RC1			Max V_y	-4.48	▷ 1.45	-3.32	-0.04	-2.36	0.71	BC 8
				Min V_y	-0.56	▷ -0.26	1.42	-0.00	1.01	-0.26	BC 15
				Max V_z	-0.72	-0.21	▷ 1.43	-0.02	1.01	-0.31	BC 14
				Min V_z	-4.40	1.43	▷ -3.33	-0.03	-2.36	0.74	BC 9
				Max M_T	-0.81	-0.17	-0.32	▷ 0.03	-0.23	-0.17	BC 23
				Min M_T	-4.43	1.44	-2.88	▷ -0.04	-2.05	0.69	BC 12
				Max M_y	-0.72	-0.21	1.43	-0.02	▷ 1.01	-0.31	BC 14
				Min M_y	-4.40	1.43	-3.33	-0.03	▷ -2.36	0.74	BC 9
				Max M_z	-4.40	1.43	-3.33	-0.03	-2.36	▷ 0.74	BC 9
				Min M_z	-0.72	-0.21	1.43	-0.02	1.01	▷ -0.31	BC 14
			0.583	Max N	▷ 0.00	0.00	0.00	0.00	0.00	0.00	
			Rechts	Min N	▷ -4.48	1.45	-3.32	-0.04	-2.36	0.71	BC 8
				Max V_y	-4.48	▷ 1.45	-3.32	-0.04	-2.36	0.71	BC 8
				Min V_y	-0.56	▷ -0.26	1.42	-0.00	1.01	-0.26	BC 15
				Max V_z	-0.72	-0.21	▷ 1.43	-0.02	1.01	-0.31	BC 14
				Min V_z	-4.40	1.43	▷ -3.33	-0.03	-2.36	0.74	BC 9
				Max M_T	-0.81	-0.17	-0.32	▷ 0.03	-0.23	-0.17	BC 23
				Min M_T	-4.43	1.44	-2.88	▷ -0.04	-2.05	0.69	BC 12
				Max M_y	-0.72	-0.21	1.43	-0.02	▷ 1.01	-0.31	BC 14
				Min M_y	-4.40	1.43	-3.33	-0.03	▷ -2.36	0.74	BC 9
				Max M_z	-4.40	1.43	-3.33	-0.03	-2.36	▷ 0.74	BC 9
				Min M_z	-0.72	-0.21	1.43	-0.02	1.01	▷ -0.31	BC 14
			0.679	Max N	▷ 0.00	0.00	0.00	0.00	0.00	0.00	
			Links	Min N	▷ -4.35	1.38	-2.94	-0.04	-2.66	0.57	BC 8
				Max V_y	-4.35	▷ 1.38	-2.94	-0.04	-2.66	0.57	BC 8
				Min V_y	-0.55	▷ -0.25	1.26	-0.00	1.14	-0.23	BC 15
				Max V_z	-0.72	-0.22	▷ 1.27	-0.02	1.14	-0.29	BC 14
				Min V_z	-4.27	1.36	▷ -2.95	-0.03	-2.66	0.60	BC 9
				Max M_T	-0.80	-0.17	-0.28	▷ 0.03	-0.26	-0.16	BC 23
				Min M_T	-4.30	1.36	-2.55	▷ -0.04	-2.31	0.56	BC 12
				Max M_y	-0.72	-0.22	1.27	-0.02	▷ 1.14	-0.29	BC 14
				Min M_y	-4.27	1.36	-2.95	-0.03	▷ -2.66	0.60	BC 9
				Max M_z	-4.27	1.36	-2.95	-0.03	-2.66	▷ 0.60	BC 9
				Min M_z	-0.72	-0.22	1.27	-0.02	1.14	▷ -0.29	BC 14
			0.679	Max N	▷ 0.00	0.00	0.00	0.00	0.00	0.00	
			Rechts	Min N	▷ -4.35	1.38	-2.94	-0.04	-2.66	0.57	BC 8
				Max V_y	-4.35	▷ 1.38	-2.94	-0.04	-2.66	0.57	BC 8
				Min V_y	-0.55	▷ -0.25	1.26	-0.00	1.14	-0.23	BC 15
				Max V_z	-0.72	-0.22	▷ 1.27	-0.02	1.14	-0.29	BC 14
				Min V_z	-4.27	1.36	▷ -2.95	-0.03	-2.66	0.60	BC 9
				Max M_T	-0.80	-0.17	-0.28	▷ 0.03	-0.26	-0.16	BC 23
				Min M_T	-4.30	1.36	-2.55	▷ -0.04	-2.31	0.56	BC 12
				Max M_y	-0.72	-0.22	1.27	-0.02	▷ 1.14	-0.29	BC 14
				Min M_y	-4.27	1.36	-2.95	-0.03	▷ -2.66	0.60	BC 9
				Max M_z	-4.27	1.36	-2.95	-0.03	-2.66	▷ 0.60	BC 9
				Min M_z	-0.72	-0.22	1.27	-0.02	1.14	▷ -0.29	BC 14
			0.707	Max N	▷ 0.00	0.00	0.00	0.00	0.00	0.00	
			Links	Min N	▷ -4.31	1.36	-2.83	-0.04	-2.74	0.54	BC 8
				Max V_y	-4.31	▷ 1.36	-2.83	-0.04	-2.74	0.54	BC 8
				Min V_y	-0.55	▷ -0.25	1.21	-0.00	1.17	-0.23	BC 15
				Max V_z	-0.72	-0.22	▷ 1.22	-0.02	1.18	-0.28	BC 14
				Min V_z	-4.23	1.34	▷ -2.83	-0.03	-2.74	0.56	BC 9
				Max M_T	-0.80	-0.17	-0.27	▷ 0.03	-0.27	-0.15	BC 23
				Min M_T	-4.26	1.34	-2.45	▷ -0.04	-2.38	0.52	BC 12
				Max M_y	-0.72	-0.22	1.22	-0.02	▷ 1.18	-0.28	BC 14
				Min M_y	-4.23	1.34	-2.83	-0.03	▷ -2.74	0.56	BC 9
				Max M_z	-4.23	1.34	-2.83	-0.03	-2.74	▷ 0.56	BC 9
				Min M_z	-0.72	-0.22	1.22	-0.02	1.18	▷ -0.28	BC 14
			0.707	Max N	▷ 0.00	0.00	0.00	0.00	0.00	0.00	
			Rechts	Min N	▷ -4.31	1.36	-2.83	-0.04	-2.74	0.54	BC 8
				Max V_y	-4.31	▷ 1.36	-2.83	-0.04	-2.74	0.54	BC 8
				Min V_y	-0.55	▷ -0.25	1.21	-0.00	1.17	-0.23	BC 15
				Max V_z	-0.72	-0.22	▷ 1.22	-0.02	1.18	-0.28	BC 14
				Min V_z	-4.23	1.34	▷ -2.83	-0.03	-2.74	0.56	BC 9
				Max M_T	-0.80	-0.17	-0.27	▷ 0.03	-0.27	-0.15	BC 23
				Min M_T	-4.26	1.34	-2.45	▷ -0.04	-2.38	0.52	BC 12
				Max M_y	-0.72	-0.22	1.22	-0.02	▷ 1.18	-0.28	BC 14
				Min M_y	-4.23	1.34	-2.83	-0.03	▷ -2.74	0.56	BC 9
				Max M_z	-4.23	1.34	-2.83	-0.03	-2.74	▷ 0.56	BC 9
				Min M_z	-0.72	-0.22	1.22	-0.02	1.18	▷ -0.28	BC 14
			2.552	Max N	▷ 0.02	0.02	-2.10	-0.00	0.28	-0.02	BC 21
			Links	Min N	▷ -1.63	-0.13	4.63	-0.03	-0.97	-0.58	BC 8
				Max V_y	-0.42	▷ 0.19	0.60	-0.00	-0.21	-0.21	BC 17
				Min V_y	-0.59	▷ -0.39	-2.03	-0.02	0.43	0.28	BC 14
				Max V_z	-1.63	-0.13	▷ 4.63	-0.03	-0.97	-0.58	BC 8
				Min V_z	0.02	0.02	▷ -2.10	-0.00	0.28	-0.02	BC 21
				Max M_T	-0.52	-0.15	0.41	▷ 0.03	-0.14	0.14	BC 23
				Min M_T	-1.36	-0.11	2.69	▷ -0.03	-0.52	-0.38	BC 6
				Max M_y	-0.59	-0.39	-2.03	-0.02	▷ 0.43	0.28	BC 14
				Min M_y	-1.47	-0.05	4.61	-0.02	▷ -0.99	-0.61	BC 9
				Max M_z	-0.59	-0.39	-2.03	-0.02	0.43	▷ 0.28	BC 14
				Min M_z	-1.47	-0.05	4.61	-0.02	-0.99	▷ -0.61	BC 9
			2.552	Max N	▷ 0.02	0.02	-2.10	-0.00	0.27	-0.02	BC 21
			Rechts	Min N	▷ -1.63	-0.13	4.63	-0.03	-0.97	-0.58	BC 8

4.12 DOORSNEDES - SNEDEKRACHTEN

Resultaatcombinaties

Staaf No.	RC	Knoop No.	Snede x [m]		Krachten [kN] N	V_y	V_z	Momenten [kNm] M_T	M_y	M_z	Bijbehorend Belastingsgeval
54	RC1			Max V_y	-0.42	▷ 0.19	0.60	-0.00	-0.21	-0.21	BC 17
				Min V_y	-0.59	▷ -0.39	-2.03	-0.02	0.43	0.28	BC 14
				Max V_z	-1.63	-0.13	▷ 4.63	-0.03	-0.97	-0.58	BC 8
				Min V_z	0.02	0.02	▷ -2.10	-0.00	0.27	-0.02	BC 21
				Max M_T	-0.52	-0.15	0.41	▷ 0.03	-0.14	0.14	BC 23
				Min M_T	-1.36	-0.11	2.69	▷ -0.03	-0.52	-0.38	BC 6
				Max M_y	-0.59	-0.39	-2.03	-0.02	▷ 0.43	0.28	BC 14
				Min M_y	-1.47	-0.05	4.61	-0.02	▷ -0.99	-0.61	BC 9
				Max M_z	-0.59	-0.39	-2.03	-0.02	0.43	▷ 0.28	BC 14
				Min M_z	-1.47	-0.05	4.61	-0.02	-0.99	▷ -0.61	BC 9
			2.581	Max N	▷ 0.02	0.02	-2.15	-0.00	0.21	-0.02	BC 21
			Links	Min N	▷ -1.59	-0.15	4.74	-0.03	-0.83	-0.58	BC 8
				Max V_y	-0.41	▷ 0.19	0.61	-0.00	-0.19	-0.21	BC 17
				Min V_y	-0.59	▷ -0.39	-2.07	-0.02	0.38	0.29	BC 14
				Max V_z	-1.59	-0.15	▷ 4.74	-0.03	-0.83	-0.58	BC 8
				Min V_z	0.02	0.02	▷ -2.15	-0.00	0.21	-0.02	BC 21
				Max M_T	-0.51	-0.15	0.42	▷ 0.03	-0.13	0.15	BC 23
				Min M_T	-1.34	-0.12	2.76	▷ -0.03	-0.44	-0.37	BC 6
				Max M_y	-0.59	-0.39	-2.07	-0.02	▷ 0.38	0.29	BC 14
				Min M_y	-1.42	-0.07	4.72	-0.02	▷ -0.86	-0.61	BC 9
				Max M_z	-0.59	-0.39	-2.07	-0.02	0.38	▷ 0.29	BC 14
				Min M_z	-1.42	-0.07	4.72	-0.02	-0.86	▷ -0.61	BC 9
			2.581	Max N	▷ 0.02	0.02	-2.15	-0.00	0.21	-0.02	BC 21
			Rechts	Min N	▷ -1.59	-0.15	4.74	-0.03	-0.83	-0.58	BC 8
				Max V_y	-0.41	▷ 0.19	0.61	-0.00	-0.19	-0.21	BC 17
				Min V_y	-0.59	▷ -0.39	-2.07	-0.02	0.38	0.29	BC 14
				Max V_z	-1.59	-0.15	▷ 4.74	-0.03	-0.83	-0.58	BC 8
				Min V_z	0.02	0.02	▷ -2.15	-0.00	0.21	-0.02	BC 21
				Max M_T	-0.51	-0.15	0.42	▷ 0.03	-0.13	0.15	BC 23
				Min M_T	-1.34	-0.12	2.76	▷ -0.03	-0.44	-0.37	BC 6
				Max M_y	-0.59	-0.39	-2.07	-0.02	▷ 0.38	0.29	BC 14
				Min M_y	-1.42	-0.07	4.72	-0.02	▷ -0.86	-0.61	BC 9
				Max M_z	-0.59	-0.39	-2.07	-0.02	0.38	▷ 0.29	BC 14
				Min M_z	-1.42	-0.07	4.72	-0.02	-0.86	▷ -0.61	BC 9
			2.677	Max N	▷ 0.03	0.02	-2.31	-0.00	-0.00	-0.02	BC 21
			Links	Min N	▷ -1.46	-0.22	5.09	-0.03	-0.36	-0.56	BC 8
				Max V_y	-0.39	▷ 0.19	0.66	-0.00	-0.13	-0.23	BC 17
				Min V_y	-0.58	▷ -0.40	-2.23	-0.02	0.17	0.33	BC 14
				Max V_z	-1.46	-0.22	▷ 5.09	-0.03	-0.36	-0.56	BC 8
				Min V_z	0.03	0.02	▷ -2.31	-0.00	-0.00	-0.02	BC 21
				Max M_T	-0.50	-0.15	0.45	▷ 0.03	-0.09	0.16	BC 23
				Min M_T	-1.26	-0.17	2.96	▷ -0.03	-0.17	-0.36	BC 6
				Max M_y	-0.58	-0.40	-2.23	-0.02	▷ 0.17	0.33	BC 14
				Min M_y	-1.29	-0.14	5.07	-0.02	▷ -0.39	-0.60	BC 9
				Max M_z	-0.58	-0.40	-2.23	-0.02	0.17	▷ 0.33	BC 14
				Min M_z	-1.29	-0.14	5.07	-0.02	-0.39	▷ -0.60	BC 9
			2.677	Max N	▷ 0.03	0.02	-2.31	-0.00	-0.00	-0.02	BC 21
			Rechts	Min N	▷ -1.46	-0.22	5.09	-0.03	-0.36	-0.56	BC 8
				Max V_y	-0.39	▷ 0.19	0.66	-0.00	-0.13	-0.23	BC 17
				Min V_y	-0.58	▷ -0.40	-2.23	-0.02	0.17	0.33	BC 14
				Max V_z	-1.46	-0.22	▷ 5.09	-0.03	-0.36	-0.56	BC 8
				Min V_z	0.03	0.02	▷ -2.31	-0.00	-0.00	-0.02	BC 21
				Max M_T	-0.50	-0.15	0.45	▷ 0.03	-0.09	0.16	BC 23
				Min M_T	-1.26	-0.17	2.96	▷ -0.03	-0.17	-0.36	BC 6
				Max M_y	-0.58	-0.40	-2.23	-0.02	▷ 0.17	0.33	BC 14
				Min M_y	-1.29	-0.14	5.07	-0.02	▷ -0.39	-0.60	BC 9
				Max M_z	-0.58	-0.40	-2.23	-0.02	0.17	▷ 0.33	BC 14
				Min M_z	-1.29	-0.14	5.07	-0.02	-0.39	▷ -0.60	BC 9
			3.260	Max N	▷ 0.08	0.02	-2.76	-0.00	-1.53	-0.03	BC 21
			Links	Min N	▷ -1.17	-0.23	5.15	-0.02	2.56	-0.30	BC 2
				Max V_y	-0.32	▷ 0.17	0.84	-0.00	0.32	-0.33	BC 17
				Min V_y	-1.07	▷ -0.44	5.21	-0.03	2.58	-0.31	BC 12
				Max V_z	-1.13	-0.40	▷ 6.03	-0.02	2.97	-0.35	BC 8
				Min V_z	0.08	0.02	▷ -2.76	-0.00	-1.53	-0.03	BC 21
				Max M_T	-0.45	-0.15	0.57	▷ 0.03	0.22	0.25	BC 23
				Min M_T	-1.04	-0.30	3.51	▷ -0.03	1.77	-0.21	BC 6
				Max M_y	-1.13	-0.40	6.03	-0.02	▷ 2.97	-0.35	BC 8
				Min M_y	0.08	0.02	-2.76	-0.00	▷ -1.53	-0.03	BC 21
				Max M_z	-0.56	-0.42	-2.68	-0.02	-1.31	▷ 0.57	BC 14
				Min M_z	-0.81	-0.04	5.10	-0.01	2.48	▷ -0.47	BC 3
		69	3.260	Max N	▷ 0.08	0.02	-2.76	-0.00	-1.53	-0.03	BC 21
			Rechts	Min N	▷ -1.17	-0.23	5.15	-0.02	2.56	-0.30	BC 2
				Max V_y	-0.32	▷ 0.17	0.84	-0.00	0.32	-0.33	BC 17
				Min V_y	-1.07	▷ -0.44	5.21	-0.03	2.58	-0.31	BC 12
				Max V_z	-1.13	-0.40	▷ 6.03	-0.02	2.98	-0.35	BC 8
				Min V_z	0.08	0.02	▷ -2.76	-0.00	-1.53	-0.03	BC 21
				Max M_T	-0.45	-0.15	0.57	▷ 0.03	0.22	0.25	BC 23
				Min M_T	-1.04	-0.30	3.51	▷ -0.03	1.77	-0.21	BC 6
				Max M_y	-1.13	-0.40	6.03	-0.02	▷ 2.98	-0.35	BC 8
				Min M_y	0.08	0.02	-2.76	-0.00	▷ -1.53	-0.03	BC 21
				Max M_z	-0.56	-0.42	-2.68	-0.02	-1.31	▷ 0.57	BC 14
				Min M_z	-0.81	-0.04	5.10	-0.01	2.48	▷ -0.47	BC 3
55	RC1	180	0.000	Max N	▷ 1.27	-0.10	1.88	-0.03	0.00	-0.29	BC 14
			Links	Min N	▷ -5.92	1.50	-4.22	0.03	0.00	1.36	BC 11

4.12 DOORSNEDES - SNEDEKRACHTEN

Resultaatcombinaties

Staaf No.	RC	Knoop No.	Snede x [m]		Krachten [kN] N	V_y	V_z	Momenten [kNm] M_T	M_y	M_z	Bijbehorend Belastingsgeval
55	RC1			Max V_y	-5.16	▷ 1.57	-4.19	0.00	0.00	1.39	BC 12
				Min V_y	-0.75	▷ -0.23	-0.41	0.09	-0.00	-0.37	BC 23
				Max V_z	1.27	-0.10	▷ 1.88	-0.03	0.00	-0.29	BC 14
				Min V_z	-5.78	1.50	▷ -4.78	0.03	0.00	1.36	BC 9
				Max M_T	-0.75	-0.23	-0.41	▷ 0.09	-0.00	-0.37	BC 23
				Min M_T	0.55	0.30	-0.62	▷ -0.04	-0.00	0.29	BC 18
				Max M_y	-5.78	1.50	-4.78	0.03	▷ 0.00	1.36	BC 9
				Min M_y	-0.75	-0.23	-0.41	0.09	▷ -0.00	-0.37	BC 23
				Max M_z	-5.16	1.57	-4.19	0.00	0.00	▷ 1.39	BC 12
				Min M_z	-0.75	-0.23	-0.41	0.09	-0.00	▷ -0.37	BC 23
			0.000	Max N	▷ 1.27	-0.10	1.88	-0.03	0.00	-0.29	BC 14
			Rechts	Min N	▷ -5.92	1.50	-4.22	0.03	0.00	1.36	BC 11
				Max V_y	-5.16	▷ 1.57	-4.19	0.00	0.00	1.39	BC 12
				Min V_y	-0.75	▷ -0.23	-0.41	0.09	-0.00	-0.37	BC 23
				Max V_z	1.27	-0.10	▷ 1.88	-0.03	0.00	-0.29	BC 14
				Min V_z	-5.78	1.50	▷ -4.78	0.03	0.00	1.36	BC 9
				Max M_T	-0.75	-0.23	-0.41	▷ 0.09	-0.00	-0.37	BC 23
				Min M_T	0.55	0.30	-0.62	▷ -0.04	-0.00	0.29	BC 18
				Max M_y	-5.78	1.50	-4.78	0.03	▷ 0.00	1.36	BC 9
				Min M_y	-0.75	-0.23	-0.41	0.09	▷ -0.00	-0.37	BC 23
				Max M_z	-5.16	1.57	-4.19	0.00	0.00	▷ 1.39	BC 12
				Min M_z	-0.75	-0.23	-0.41	0.09	-0.00	▷ -0.37	BC 23
			0.583	Max N	▷ 1.29	-0.13	1.44	-0.03	1.01	-0.22	BC 14
			Links	Min N	▷ -5.46	1.29	-3.11	0.03	-2.21	0.52	BC 11
				Max V_y	-4.71	▷ 1.34	-3.08	0.01	-2.20	0.52	BC 12
				Min V_y	-0.70	▷ -0.23	-0.28	0.09	-0.21	-0.24	BC 23
				Max V_z	1.29	-0.13	▷ 1.44	-0.03	1.01	-0.22	BC 14
				Min V_z	-5.34	1.29	▷ -3.53	0.04	-2.51	0.52	BC 9
				Max M_T	-0.70	-0.23	-0.28	▷ 0.09	-0.21	-0.24	BC 23
				Min M_T	0.60	0.25	-0.44	▷ -0.03	-0.32	0.13	BC 18
				Max M_y	1.29	-0.13	1.44	-0.03	▷ 1.01	-0.22	BC 14
				Min M_y	-5.34	1.29	-3.53	0.04	▷ -2.51	0.52	BC 9
				Max M_z	-4.97	1.30	-3.10	0.01	-2.20	▷ 0.53	BC 13
				Min M_z	-0.20	-0.16	-0.27	0.08	-0.20	▷ -0.26	BC 22
			0.583	Max N	▷ 1.29	-0.13	1.44	-0.03	1.01	-0.22	BC 14
			Rechts	Min N	▷ -5.46	1.29	-3.11	0.03	-2.21	0.52	BC 11
				Max V_y	-4.71	▷ 1.34	-3.08	0.01	-2.20	0.52	BC 12
				Min V_y	-0.70	▷ -0.23	-0.28	0.09	-0.21	-0.24	BC 23
				Max V_z	1.29	-0.13	▷ 1.44	-0.03	1.01	-0.22	BC 14
				Min V_z	-5.34	1.29	▷ -3.53	0.04	-2.51	0.52	BC 9
				Max M_T	-0.70	-0.23	-0.28	▷ 0.09	-0.21	-0.24	BC 23
				Min M_T	0.60	0.25	-0.44	▷ -0.03	-0.32	0.13	BC 18
				Max M_y	1.29	-0.13	1.44	-0.03	▷ 1.01	-0.22	BC 14
				Min M_y	-5.34	1.29	-3.53	0.04	▷ -2.51	0.52	BC 9
				Max M_z	-4.97	1.30	-3.10	0.01	-2.20	▷ 0.53	BC 13
				Min M_z	-0.20	-0.16	-0.27	0.08	-0.20	▷ -0.26	BC 22
			0.679	Max N	▷ 1.30	-0.14	1.28	-0.03	1.14	-0.21	BC 14
			Links	Min N	▷ -5.32	1.21	-2.76	0.03	-2.49	0.40	BC 11
				Max V_y	-4.57	▷ 1.26	-2.73	0.01	-2.48	0.39	BC 12
				Min V_y	-0.69	▷ -0.23	-0.25	0.09	-0.24	-0.21	BC 23
				Max V_z	1.30	-0.14	▷ 1.28	-0.03	1.14	-0.21	BC 14
				Min V_z	-5.19	1.21	▷ -3.13	0.04	-2.83	0.40	BC 9
				Max M_T	-0.69	-0.23	-0.25	▷ 0.09	-0.24	-0.21	BC 23
				Min M_T	0.61	0.24	-0.38	▷ -0.03	-0.36	0.11	BC 18
				Max M_y	1.30	-0.14	1.28	-0.03	▷ 1.14	-0.21	BC 14
				Min M_y	-5.19	1.21	-3.13	0.04	▷ -2.83	0.40	BC 9
				Max M_z	-4.82	1.23	-2.74	0.01	-2.48	▷ 0.41	BC 13
				Min M_z	-0.19	-0.17	-0.23	0.08	-0.23	▷ -0.24	BC 22
			0.679	Max N	▷ 1.30	-0.14	1.28	-0.03	1.14	-0.21	BC 14
			Rechts	Min N	▷ -5.32	1.21	-2.76	0.03	-2.49	0.40	BC 11
				Max V_y	-4.57	▷ 1.26	-2.73	0.01	-2.48	0.39	BC 12
				Min V_y	-0.69	▷ -0.23	-0.25	0.09	-0.24	-0.21	BC 23
				Max V_z	1.30	-0.14	▷ 1.28	-0.03	1.14	-0.21	BC 14
				Min V_z	-5.19	1.21	▷ -3.13	0.04	-2.83	0.40	BC 9
				Max M_T	-0.69	-0.23	-0.25	▷ 0.09	-0.24	-0.21	BC 23
				Min M_T	0.61	0.24	-0.38	▷ -0.03	-0.36	0.11	BC 18
				Max M_y	1.30	-0.14	1.28	-0.03	▷ 1.14	-0.21	BC 14
				Min M_y	-5.19	1.21	-3.13	0.04	▷ -2.83	0.40	BC 9
				Max M_z	-4.82	1.23	-2.74	0.01	-2.48	▷ 0.41	BC 13
				Min M_z	-0.19	-0.17	-0.23	0.08	-0.23	▷ -0.24	BC 22
			0.707	Max N	▷ 1.30	-0.14	1.23	-0.03	1.18	-0.20	BC 14
			Links	Min N	▷ -5.27	1.19	-2.65	0.03	-2.57	0.36	BC 11
				Max V_y	-4.53	▷ 1.23	-2.62	0.01	-2.55	0.36	BC 12
				Min V_y	-0.68	▷ -0.23	-0.24	0.09	-0.24	-0.21	BC 23
				Max V_z	1.30	-0.14	▷ 1.23	-0.03	1.18	-0.20	BC 14
				Min V_z	-5.15	1.19	▷ -3.00	0.04	-2.91	0.36	BC 9
				Max M_T	-0.68	-0.23	-0.24	▷ 0.09	-0.24	-0.21	BC 23
				Min M_T	0.62	0.24	-0.37	▷ -0.03	-0.37	0.10	BC 18
				Max M_y	1.30	-0.14	1.23	-0.03	▷ 1.18	-0.20	BC 14
				Min M_y	-5.15	1.19	-3.00	0.04	▷ -2.91	0.36	BC 9
				Max M_z	-4.78	1.20	-2.63	0.01	-2.56	▷ 0.37	BC 13
				Min M_z	-0.19	-0.17	-0.22	0.08	-0.23	▷ -0.24	BC 22
			0.707	Max N	▷ 1.30	-0.14	1.23	-0.03	1.18	-0.20	BC 14
			Rechts	Min N	▷ -5.27	1.19	-2.65	0.03	-2.57	0.36	BC 11

4.12 DOORSNEDES - SNEDEKRACHTEN

Resultaatcombinaties

Staaf No.	RC	Knoop No.	Snede x [m]		Krachten [kN] N	V_y	V_z	Momenten [kNm] M_T	M_y	M_z	Bijbehorend Belastingsgeval
55	RC1			Max V_y	-4.53	▷ 1.23	-2.62	0.01	-2.55	0.36	BC 12
				Min V_y	-0.68	▷ -0.23	-0.24	0.09	-0.24	-0.21	BC 23
				Max V_z	1.30	-0.14	▷ 1.23	-0.03	1.18	-0.20	BC 14
				Min V_z	-5.15	1.19	▷ -3.00	0.04	-2.91	0.36	BC 9
				Max M_T	-0.68	-0.23	-0.24	▷ 0.09	-0.24	-0.21	BC 23
				Min M_T	0.62	0.24	-0.37	▷ -0.03	-0.37	0.10	BC 18
				Max M_y	1.30	-0.14	1.23	-0.03	▷ 1.18	-0.20	BC 14
				Min M_y	-5.15	1.19	-3.00	0.04	▷ -2.91	0.36	BC 9
				Max M_z	-4.78	1.20	-2.63	0.01	-2.56	▷ 0.37	BC 13
				Min M_z	-0.19	-0.17	-0.22	0.08	-0.23	▷ -0.24	BC 22
			2.552	Max N	▷ 1.42	-0.30	-2.00	-0.03	0.46	0.20	BC 14
			Links	Min N	▷ -2.30	-0.33	4.29	0.04	-0.94	-0.41	BC 11
				Max V_y	0.54	▷ 0.11	0.61	-0.02	-0.18	-0.14	BC 19
				Min V_y	-2.13	▷ -0.39	4.31	0.04	-0.91	-0.39	BC 10
				Max V_z	-2.02	-0.38	▷ 4.94	0.04	-0.99	-0.40	BC 8
				Min V_z	-0.35	-0.01	▷ -2.12	-0.02	0.23	0.01	BC 21
				Max M_T	-0.41	-0.21	0.44	▷ 0.09	-0.06	0.20	BC 23
				Min M_T	0.88	-0.01	0.65	▷ -0.03	-0.11	-0.11	BC 18
				Max M_y	1.42	-0.30	-2.00	-0.03	▷ 0.46	0.20	BC 14
				Min M_y	-2.19	-0.32	4.92	0.05	▷ -1.03	-0.41	BC 9
				Max M_z	-0.06	-0.33	0.48	0.08	0.01	▷ 0.22	BC 22
				Min M_z	-2.19	-0.32	4.92	0.05	-1.03	▷ -0.41	BC 9
			2.552	Max N	▷ 1.42	-0.30	-2.00	-0.03	0.46	0.20	BC 14
			Rechts	Min N	▷ -2.30	-0.33	4.29	0.04	-0.94	-0.41	BC 11
				Max V_y	0.54	▷ 0.11	0.61	-0.02	-0.18	-0.14	BC 19
				Min V_y	-2.13	▷ -0.39	4.31	0.04	-0.91	-0.39	BC 10
				Max V_z	-2.02	-0.38	▷ 4.94	0.04	-0.99	-0.40	BC 8
				Min V_z	-0.35	-0.01	▷ -2.12	-0.02	0.23	0.01	BC 21
				Max M_T	-0.41	-0.21	0.44	▷ 0.09	-0.06	0.20	BC 23
				Min M_T	0.88	-0.01	0.65	▷ -0.03	-0.11	-0.11	BC 18
				Max M_y	1.42	-0.30	-2.00	-0.03	▷ 0.46	0.20	BC 14
				Min M_y	-2.19	-0.32	4.92	0.05	▷ -1.03	-0.41	BC 9
				Max M_z	-0.06	-0.33	0.48	0.08	0.01	▷ 0.22	BC 22
				Min M_z	-2.19	-0.32	4.92	0.05	-1.03	▷ -0.41	BC 9
			2.581	Max N	▷ 1.43	-0.30	-2.05	-0.03	0.40	0.21	BC 14
			Links	Min N	▷ -2.26	-0.35	4.39	0.04	-0.82	-0.40	BC 11
				Max V_y	0.55	▷ 0.11	0.62	-0.02	-0.16	-0.14	BC 19
				Min V_y	-2.09	▷ -0.42	4.41	0.04	-0.78	-0.38	BC 10
				Max V_z	-1.97	-0.41	▷ 5.06	0.04	-0.85	-0.39	BC 8
				Min V_z	-0.35	-0.01	▷ -2.17	-0.02	0.17	0.01	BC 21
				Max M_T	-0.40	-0.21	0.45	▷ 0.09	-0.05	0.20	BC 23
				Min M_T	0.88	-0.01	0.67	▷ -0.03	-0.09	-0.11	BC 18
				Max M_y	1.43	-0.30	-2.05	-0.03	▷ 0.40	0.21	BC 14
				Min M_y	-2.14	-0.34	5.04	0.05	▷ -0.89	-0.40	BC 9
				Max M_z	-0.06	-0.33	0.49	0.08	0.02	▷ 0.23	BC 22
				Min M_z	-2.14	-0.34	5.04	0.05	-0.89	▷ -0.40	BC 9
			2.581	Max N	▷ 1.43	-0.30	-2.05	-0.03	0.40	0.21	BC 14
			Rechts	Min N	▷ -2.26	-0.35	4.39	0.04	-0.82	-0.40	BC 11
				Max V_y	0.55	▷ 0.11	0.62	-0.02	-0.16	-0.14	BC 19
				Min V_y	-2.09	▷ -0.42	4.41	0.04	-0.78	-0.38	BC 10
				Max V_z	-1.97	-0.41	▷ 5.06	0.04	-0.85	-0.39	BC 8
				Min V_z	-0.35	-0.01	▷ -2.17	-0.02	0.17	0.01	BC 21
				Max M_T	-0.40	-0.21	0.45	▷ 0.09	-0.05	0.20	BC 23
				Min M_T	0.88	-0.01	0.67	▷ -0.03	-0.09	-0.11	BC 18
				Max M_y	1.43	-0.30	-2.05	-0.03	▷ 0.40	0.21	BC 14
				Min M_y	-2.14	-0.34	5.04	0.05	▷ -0.89	-0.40	BC 9
				Max M_z	-0.06	-0.33	0.49	0.08	0.02	▷ 0.23	BC 22
				Min M_z	-2.14	-0.34	5.04	0.05	-0.89	▷ -0.40	BC 9
			2.677	Max N	▷ 1.43	-0.31	-2.21	-0.03	0.20	0.24	BC 14
			Links	Min N	▷ -2.12	-0.42	4.71	0.04	-0.38	-0.36	BC 11
				Max V_y	0.57	▷ 0.11	0.67	-0.02	-0.10	-0.15	BC 19
				Min V_y	-1.95	▷ -0.49	4.73	0.04	-0.34	-0.34	BC 10
				Max V_z	-1.83	-0.48	▷ 5.43	0.04	-0.35	-0.34	BC 8
				Min V_z	-0.33	-0.01	▷ -2.33	-0.02	-0.05	0.01	BC 21
				Max M_T	-0.39	-0.21	0.48	▷ 0.09	-0.00	0.22	BC 23
				Min M_T	0.90	-0.02	0.72	▷ -0.03	-0.02	-0.11	BC 18
				Max M_y	1.43	-0.31	-2.21	-0.03	▷ 0.20	0.24	BC 14
				Min M_y	-2.00	-0.41	5.41	0.05	▷ -0.38	-0.37	BC 9
				Max M_z	-0.06	-0.34	0.53	0.08	0.07	▷ 0.27	BC 22
				Min M_z	-1.62	-0.42	4.72	0.02	-0.35	▷ -0.37	BC 13
			2.677	Max N	▷ 1.43	-0.31	-2.21	-0.03	0.20	0.24	BC 14
			Rechts	Min N	▷ -2.12	-0.42	4.71	0.04	-0.38	-0.36	BC 11
				Max V_y	0.57	▷ 0.11	0.67	-0.02	-0.10	-0.15	BC 19
				Min V_y	-1.95	▷ -0.49	4.73	0.04	-0.34	-0.34	BC 10
				Max V_z	-1.83	-0.48	▷ 5.43	0.04	-0.35	-0.34	BC 8
				Min V_z	-0.33	-0.01	▷ -2.33	-0.02	-0.05	0.01	BC 21
				Max M_T	-0.39	-0.21	0.48	▷ 0.09	-0.00	0.23	BC 23
				Min M_T	0.90	-0.02	0.72	▷ -0.03	-0.02	-0.11	BC 18
				Max M_y	1.43	-0.31	-2.21	-0.03	▷ 0.20	0.24	BC 14
				Min M_y	-2.00	-0.41	5.41	0.05	▷ -0.38	-0.37	BC 9
				Max M_z	-0.06	-0.34	0.53	0.08	0.07	▷ 0.27	BC 22
				Min M_z	-1.62	-0.42	4.72	0.02	-0.35	▷ -0.37	BC 13
			3.260	Max N	▷ 1.46	-0.34	-2.66	-0.03	-1.27	0.44	BC 14
			Links	Min N	▷ -1.75	-0.61	5.57	0.04	2.71	-0.03	BC 11

4.12 DOORSNEDES - SNEDEKRACHTEN

Resultaatcombinaties

Staaf No.	RC	Knoop No.	Snede x [m]		Krachten [kN] N	V_y	V_z	Momenten [kNm] M_T	M_y	M_z	Bijbehorend Belastingsgeval
55	RC1			Max V_y	0.65	▷ 0.09	0.85	-0.02	0.36	-0.21	BC 19
				Min V_y	-1.59	▷ -0.69	5.59	0.04	2.76	0.04	BC 10
				Max V_z	-1.48	-0.68	▷ 6.43	0.05	3.21	0.03	BC 8
				Min V_z	-0.28	-0.01	▷ -2.78	-0.02	-1.58	0.02	BC 21
				Max M_T	-0.34	-0.21	0.60	▷ 0.09	0.32	0.35	BC 23
				Min M_T	1.46	-0.34	-2.66	▷ -0.03	-1.27	0.44	BC 14
				Max M_y	-1.48	-0.68	6.43	0.05	▷ 3.21	0.03	BC 8
				Min M_y	-0.28	-0.01	-2.78	-0.02	▷ -1.58	0.02	BC 21
				Max M_z	-0.03	-0.37	0.65	0.08	0.42	▷ 0.48	BC 22
				Min M_z	0.65	0.09	0.85	-0.02	0.36	▷ -0.21	BC 19
		68	3.260	Max N	▷ 1.46	-0.34	-2.66	-0.03	-1.27	0.44	BC 14
			Rechts	Min N	▷ -1.75	-0.61	5.57	0.04	2.71	-0.03	BC 11
				Max V_y	0.65	▷ 0.09	0.85	-0.02	0.36	-0.21	BC 19
				Min V_y	-1.59	▷ -0.69	5.59	0.04	2.76	0.04	BC 10
				Max V_z	-1.48	-0.68	▷ 6.43	0.05	3.21	0.03	BC 8
				Min V_z	-0.28	-0.01	▷ -2.78	-0.02	-1.58	0.02	BC 21
				Max M_T	-0.34	-0.21	0.60	▷ 0.09	0.32	0.35	BC 23
				Min M_T	1.46	-0.34	-2.66	▷ -0.03	-1.27	0.44	BC 14
				Max M_y	-1.48	-0.68	6.43	0.05	▷ 3.21	0.03	BC 8
				Min M_y	-0.28	-0.01	-2.78	-0.02	▷ -1.58	0.02	BC 21
				Max M_z	-0.03	-0.37	0.65	0.08	0.42	▷ 0.48	BC 22
				Min M_z	0.65	0.09	0.85	-0.02	0.36	▷ -0.21	BC 19
56	RC1	166	0.000	Max N	▷ 1.82	0.11	-1.86	0.11	0.00	0.08	BC 22
			Links	Min N	▷ -5.83	1.69	4.18	-0.02	-0.00	1.54	BC 11
				Max V_y	-5.69	▷ 1.69	4.75	-0.03	-0.00	1.54	BC 9
				Min V_y	1.27	▷ -0.10	-1.88	0.03	-0.00	-0.29	BC 14
				Max V_z	-5.52	1.55	▷ 4.77	-0.03	-0.00	1.38	BC 8
				Min V_z	0.93	0.16	▷ -1.92	0.02	0.00	0.04	BC 15
				Max M_T	1.82	0.11	-1.86	▷ 0.11	0.00	0.08	BC 22
				Min M_T	-4.00	1.20	3.85	▷ -0.07	-0.00	1.08	BC 7
				Max M_y	1.48	0.38	-1.91	0.10	▷ 0.00	0.41	BC 23
				Min M_y	-5.64	1.49	4.77	-0.05	▷ -0.01	1.29	BC 12
				Max M_z	-5.69	1.69	4.75	-0.03	-0.00	▷ 1.54	BC 9
				Min M_z	1.27	-0.10	-1.88	0.03	-0.00	▷ -0.29	BC 14
			0.000	Max N	▷ 1.82	0.11	-1.86	0.11	0.00	0.08	BC 22
			Rechts	Min N	▷ -5.83	1.69	4.18	-0.02	-0.00	1.54	BC 11
				Max V_y	-5.69	▷ 1.69	4.75	-0.03	-0.00	1.54	BC 9
				Min V_y	1.27	▷ -0.10	-1.88	0.03	-0.00	-0.29	BC 14
				Max V_z	-5.52	1.55	▷ 4.77	-0.03	-0.00	1.38	BC 8
				Min V_z	0.93	0.16	▷ -1.92	0.02	0.00	0.04	BC 15
				Max M_T	1.82	0.11	-1.86	▷ 0.11	0.00	0.08	BC 22
				Min M_T	-4.00	1.20	3.85	▷ -0.07	-0.00	1.08	BC 7
				Max M_y	1.48	0.38	-1.91	0.10	▷ 0.00	0.41	BC 23
				Min M_y	-5.64	1.49	4.77	-0.05	▷ -0.01	1.29	BC 12
				Max M_z	-5.69	1.69	4.75	-0.03	-0.00	▷ 1.54	BC 9
				Min M_z	1.27	-0.10	-1.88	0.03	-0.00	▷ -0.29	BC 14
			0.583	Max N	▷ 1.85	0.09	-1.42	0.11	-1.00	0.01	BC 22
			Links	Min N	▷ -5.37	1.45	3.09	-0.03	2.20	0.60	BC 11
				Max V_y	-5.25	▷ 1.45	3.50	-0.03	2.49	0.60	BC 9
				Min V_y	1.29	▷ -0.13	-1.44	0.03	-1.01	-0.22	BC 14
				Max V_z	-5.08	1.33	▷ 3.52	-0.03	2.50	0.51	BC 8
				Min V_z	0.97	0.11	▷ -1.47	0.03	-1.04	-0.04	BC 15
				Max M_T	1.85	0.09	-1.42	▷ 0.11	-1.00	0.01	BC 22
				Min M_T	-3.71	1.02	2.85	▷ -0.07	2.02	0.41	BC 7
				Max M_y	-5.08	1.33	3.52	-0.03	▷ 2.50	0.51	BC 8
				Min M_y	0.97	0.11	-1.47	0.03	▷ -1.04	-0.04	BC 15
				Max M_z	-5.25	1.45	3.50	-0.03	2.49	▷ 0.60	BC 9
				Min M_z	1.29	-0.13	-1.44	0.03	-1.01	▷ -0.22	BC 14
			0.583	Max N	▷ 1.85	0.09	-1.42	0.11	-1.00	0.01	BC 22
			Rechts	Min N	▷ -5.37	1.45	3.09	-0.03	2.20	0.60	BC 11
				Max V_y	-5.25	▷ 1.45	3.50	-0.03	2.49	0.60	BC 9
				Min V_y	1.29	▷ -0.13	-1.44	0.03	-1.01	-0.22	BC 14
				Max V_z	-5.08	1.33	▷ 3.52	-0.03	2.50	0.51	BC 8
				Min V_z	0.97	0.11	▷ -1.47	0.03	-1.04	-0.04	BC 15
				Max M_T	1.85	0.09	-1.42	▷ 0.11	-1.00	0.01	BC 22
				Min M_T	-3.71	1.02	2.85	▷ -0.07	2.02	0.41	BC 7
				Max M_y	-5.08	1.33	3.52	-0.03	▷ 2.50	0.51	BC 8
				Min M_y	0.97	0.11	-1.47	0.03	▷ -1.04	-0.04	BC 15
				Max M_z	-5.25	1.45	3.50	-0.03	2.49	▷ 0.60	BC 9
				Min M_z	1.29	-0.13	-1.44	0.03	-1.01	▷ -0.22	BC 14
			0.679	Max N	▷ 1.85	0.08	-1.26	0.11	-1.13	0.00	BC 22
			Links	Min N	▷ -5.23	1.31	3.10	-0.05	2.81	0.41	BC 13
				Max V_y	-5.10	▷ 1.37	3.10	-0.03	2.81	0.46	BC 9
				Min V_y	1.30	▷ -0.14	-1.28	0.03	-1.14	-0.21	BC 14
				Max V_z	-4.94	1.25	▷ 3.12	-0.03	2.82	0.39	BC 8
				Min V_z	0.99	0.10	▷ -1.30	0.03	-1.17	-0.05	BC 15
				Max M_T	1.85	0.08	-1.26	▷ 0.11	-1.13	0.00	BC 22
				Min M_T	-3.61	0.96	2.52	▷ -0.07	2.28	0.32	BC 7
				Max M_y	-4.94	1.25	3.12	-0.03	▷ 2.82	0.39	BC 8
				Min M_y	0.99	0.10	-1.30	0.03	▷ -1.17	-0.05	BC 15
				Max M_z	-5.10	1.37	3.10	-0.03	2.81	▷ 0.46	BC 9
				Min M_z	1.30	-0.14	-1.28	0.03	-1.14	▷ -0.21	BC 14
			0.679	Max N	▷ 1.85	0.08	-1.26	0.11	-1.13	0.00	BC 22
			Rechts	Min N	▷ -5.23	1.31	3.10	-0.05	2.81	0.41	BC 13

4.12 DOORSNEDES - SNEDEKRACHTEN

Resultaatcombinaties

Staaf No.	RC	Knoop No.	Snede x [m]		Krachten [kN] N	V_y	V_z	Momenten [kNm] M_T	M_y	M_z	Bijbehorend Belastingsgeval
56	RC1			Max V_y	-5.10	▷ 1.37	3.10	-0.03	2.81	0.46	BC 9
				Min V_y	1.30	▷ -0.14	-1.28	0.03	-1.14	-0.21	BC 14
				Max V_z	-4.94	1.25	▷ 3.12	-0.03	2.82	0.39	BC 8
				Min V_z	0.99	0.10	▷ -1.30	0.03	-1.17	-0.05	BC 15
				Max M_T	1.85	0.08	-1.26	▷ 0.11	-1.13	0.00	BC 22
				Min M_T	-3.61	0.96	2.52	▷ -0.07	2.28	0.32	BC 7
				Max M_y	-4.94	1.25	3.12	-0.03	▷ 2.82	0.39	BC 8
				Min M_y	0.99	0.10	-1.30	0.03	▷ -1.17	-0.05	BC 15
				Max M_z	-5.10	1.37	3.10	-0.03	2.81	▷ 0.46	BC 9
				Min M_z	1.30	-0.14	-1.28	0.03	-1.14	▷ -0.21	BC 14
			0.707	Max N	▷ 1.85	0.08	-1.21	0.11	-1.16	0.00	BC 22
			Links	Min N	▷ -5.18	1.28	2.98	-0.05	2.89	0.37	BC 13
				Max V_y	-5.06	▷ 1.34	2.98	-0.03	2.90	0.43	BC 9
				Min V_y	1.30	▷ -0.14	-1.23	0.03	-1.18	-0.20	BC 14
				Max V_z	-4.90	1.22	▷ 2.99	-0.03	2.91	0.35	BC 8
				Min V_z	0.99	0.10	▷ -1.25	0.03	-1.21	-0.06	BC 15
				Max M_T	1.85	0.08	-1.21	▷ 0.11	-1.16	0.00	BC 22
				Min M_T	-3.58	0.95	2.42	▷ -0.07	2.35	0.29	BC 7
				Max M_y	-4.90	1.22	2.99	-0.03	▷ 2.91	0.35	BC 8
				Min M_y	0.99	0.10	-1.25	0.03	▷ -1.21	-0.06	BC 15
				Max M_z	-5.06	1.34	2.98	-0.03	2.90	▷ 0.43	BC 9
				Min M_z	1.30	-0.14	-1.23	0.03	-1.18	▷ -0.20	BC 14
			0.707	Max N	▷ 1.85	0.08	-1.21	0.11	-1.16	0.00	BC 22
			Rechts	Min N	▷ -5.18	1.28	2.98	-0.05	2.89	0.37	BC 13
				Max V_y	-5.06	▷ 1.34	2.98	-0.03	2.90	0.43	BC 9
				Min V_y	1.30	▷ -0.14	-1.23	0.03	-1.18	-0.20	BC 14
				Max V_z	-4.90	1.22	▷ 2.99	-0.03	2.91	0.35	BC 8
				Min V_z	0.99	0.10	▷ -1.25	0.03	-1.21	-0.06	BC 15
				Max M_T	1.85	0.08	-1.21	▷ 0.11	-1.16	0.00	BC 22
				Min M_T	-3.58	0.95	2.42	▷ -0.07	2.35	0.29	BC 7
				Max M_y	-4.90	1.22	2.99	-0.03	▷ 2.91	0.35	BC 8
				Min M_y	0.99	0.10	-1.25	0.03	▷ -1.21	-0.06	BC 15
				Max M_z	-5.06	1.34	2.98	-0.03	2.90	▷ 0.43	BC 9
				Min M_z	1.30	-0.14	-1.23	0.03	-1.18	▷ -0.20	BC 14
			2.552	Max N	▷ 1.98	-0.06	2.02	0.11	-0.41	-0.01	BC 22
			Links	Min N	▷ -2.22	-0.39	-4.91	-0.06	0.99	-0.43	BC 13
				Max V_y	-0.27	▷ 0.06	-0.55	-0.01	0.19	-0.24	BC 17
				Min V_y	-2.14	▷ -0.43	-4.95	-0.06	0.98	-0.35	BC 12
				Max V_z	-0.18	-0.03	▷ 2.15	0.02	-0.27	-0.11	BC 21
				Min V_z	-2.14	-0.43	▷ -4.95	-0.06	0.98	-0.35	BC 12
				Max M_T	1.98	-0.06	2.02	▷ 0.11	-0.41	-0.01	BC 22
				Min M_T	-1.64	-0.25	-4.04	▷ -0.08	0.79	-0.34	BC 7
				Max M_y	-2.09	-0.34	-4.90	-0.04	▷ 1.01	-0.47	BC 9
				Min M_y	1.42	-0.30	2.00	0.03	▷ -0.46	0.20	BC 14
				Max M_z	1.42	-0.30	2.00	0.03	-0.46	▷ 0.20	BC 14
				Min M_z	-2.09	-0.34	-4.90	-0.04	1.01	▷ -0.47	BC 9
			2.552	Max N	▷ 1.98	-0.06	2.02	0.11	-0.41	-0.01	BC 22
			Rechts	Min N	▷ -2.22	-0.39	-4.91	-0.06	0.99	-0.43	BC 13
				Max V_y	-0.27	▷ 0.06	-0.55	-0.01	0.19	-0.24	BC 17
				Min V_y	-2.14	▷ -0.43	-4.95	-0.06	0.98	-0.35	BC 12
				Max V_z	-0.18	-0.03	▷ 2.15	0.02	-0.27	-0.11	BC 21
				Min V_z	-2.14	-0.43	▷ -4.95	-0.06	0.98	-0.35	BC 12
				Max M_T	1.98	-0.06	2.02	▷ 0.11	-0.41	-0.01	BC 22
				Min M_T	-1.64	-0.25	-4.04	▷ -0.08	0.79	-0.34	BC 7
				Max M_y	-2.09	-0.34	-4.90	-0.04	▷ 1.01	-0.47	BC 9
				Min M_y	1.42	-0.30	2.00	0.03	▷ -0.46	0.20	BC 14
				Max M_z	1.42	-0.30	2.00	0.03	-0.46	▷ 0.20	BC 14
				Min M_z	-2.09	-0.34	-4.90	-0.04	1.01	▷ -0.47	BC 9
			2.581	Max N	▷ 1.98	-0.07	2.07	0.11	-0.36	-0.01	BC 22
			Links	Min N	▷ -2.18	-0.42	-5.02	-0.06	0.85	-0.41	BC 13
				Max V_y	-0.26	▷ 0.06	-0.57	-0.01	0.17	-0.24	BC 17
				Min V_y	-2.10	▷ -0.45	-5.06	-0.06	0.84	-0.34	BC 12
				Max V_z	-0.17	-0.04	▷ 2.21	0.02	-0.21	-0.11	BC 21
				Min V_z	-2.10	-0.45	▷ -5.06	-0.06	0.84	-0.34	BC 12
				Max M_T	1.98	-0.07	2.07	▷ 0.11	-0.36	-0.01	BC 22
				Min M_T	-1.61	-0.27	-4.13	▷ -0.08	0.68	-0.33	BC 7
				Max M_y	-2.05	-0.37	-5.02	-0.04	▷ 0.87	-0.46	BC 9
				Min M_y	1.43	-0.30	2.05	0.03	▷ -0.40	0.21	BC 14
				Max M_z	1.43	-0.30	2.05	0.03	-0.40	▷ 0.21	BC 14
				Min M_z	-2.05	-0.37	-5.02	-0.04	0.87	▷ -0.46	BC 9
			2.581	Max N	▷ 1.98	-0.07	2.07	0.11	-0.36	-0.01	BC 22
			Rechts	Min N	▷ -2.18	-0.42	-5.02	-0.06	0.85	-0.41	BC 13
				Max V_y	-0.26	▷ 0.06	-0.57	-0.01	0.17	-0.24	BC 17
				Min V_y	-2.10	▷ -0.45	-5.06	-0.06	0.84	-0.34	BC 12
				Max V_z	-0.17	-0.04	▷ 2.21	0.02	-0.21	-0.11	BC 21
				Min V_z	-2.10	-0.45	▷ -5.06	-0.06	0.84	-0.34	BC 12
				Max M_T	1.98	-0.07	2.07	▷ 0.11	-0.36	-0.01	BC 22
				Min M_T	-1.61	-0.27	-4.13	▷ -0.08	0.68	-0.33	BC 7
				Max M_y	-2.05	-0.37	-5.02	-0.04	▷ 0.87	-0.46	BC 9
				Min M_y	1.43	-0.30	2.05	0.03	▷ -0.40	0.21	BC 14
				Max M_z	1.43	-0.30	2.05	0.03	-0.40	▷ 0.21	BC 14
				Min M_z	-2.05	-0.37	-5.02	-0.04	0.87	▷ -0.46	BC 9
			2.677	Max N	▷ 1.98	-0.07	2.23	0.11	-0.15	0.00	BC 22
			Links	Min N	▷ -2.03	-0.49	-5.39	-0.06	0.35	-0.37	BC 13

4.12 DOORSNEDES - SNEDEKRACHTEN

Resultaatcombinaties

Staaf No.	RC	Knoop No.	Snede x [m]		Krachten [kN] N	V_y	V_z	Momenten [kNm] M_T	M_y	M_z	Bijbehorend Belastingsgeval
56	RC1			Max V_y	-0.24	⊳ 0.04	-0.61	-0.01	0.12	-0.25	BC 17
				Min V_y	-1.96	⊳ -0.53	-5.44	-0.06	0.33	-0.29	BC 12
				Max V_z	-0.16	-0.05	⊳ 2.37	0.02	0.01	-0.11	BC 21
				Min V_z	-1.96	-0.53	⊳ -5.44	-0.06	0.33	-0.29	BC 12
				Max M_T	1.98	-0.07	2.23	⊳ 0.11	-0.15	0.00	BC 22
				Min M_T	-1.52	-0.32	-4.44	⊳ -0.08	0.26	-0.30	BC 7
				Max M_y	-1.91	-0.45	-5.39	-0.05	⊳ 0.36	-0.42	BC 9
				Min M_y	1.43	-0.31	2.21	0.03	⊳ -0.20	0.24	BC 14
				Max M_z	1.43	-0.31	2.21	0.03	-0.20	⊳ 0.24	BC 14
				Min M_z	-1.91	-0.45	-5.39	-0.05	0.36	⊳ -0.42	BC 9
			2.677	Max N	⊳ 1.98	-0.07	2.23	0.11	-0.15	0.00	BC 22
			Rechts	Min N	⊳ -2.03	-0.49	-5.39	-0.06	0.35	-0.37	BC 13
				Max V_y	-0.24	⊳ 0.04	-0.61	-0.01	0.12	-0.25	BC 17
				Min V_y	-1.96	⊳ -0.53	-5.44	-0.06	0.33	-0.29	BC 12
				Max V_z	-0.16	-0.05	⊳ 2.37	0.02	0.01	-0.11	BC 21
				Min V_z	-1.96	-0.53	⊳ -5.44	-0.06	0.33	-0.29	BC 12
				Max M_T	1.98	-0.07	2.23	⊳ 0.11	-0.15	0.00	BC 22
				Min M_T	-1.52	-0.32	-4.44	⊳ -0.08	0.26	-0.30	BC 7
				Max M_y	-1.91	-0.45	-5.39	-0.05	⊳ 0.36	-0.42	BC 9
				Min M_y	1.43	-0.31	2.21	0.03	⊳ -0.20	0.24	BC 14
				Max M_z	1.43	-0.31	2.21	0.03	-0.20	⊳ 0.24	BC 14
				Min M_z	-1.91	-0.45	-5.39	-0.05	0.36	⊳ -0.42	BC 9
			3.260	Max N	⊳ 2.01	-0.10	2.68	0.12	1.33	0.06	BC 22
			Links	Min N	⊳ -1.67	-0.70	-6.38	-0.07	-3.18	0.01	BC 13
				Max V_y	0.00	⊳ 0.00	0.00	0.00	0.00	0.00	
				Min V_y	-1.61	⊳ -0.72	-6.44	-0.06	-3.23	0.11	BC 12
				Max V_z	-0.11	-0.10	⊳ 2.83	0.02	1.57	-0.05	BC 21
				Min V_z	-1.61	-0.72	⊳ -6.44	-0.06	-3.23	0.11	BC 12
				Max M_T	2.01	-0.10	2.68	⊳ 0.12	1.33	0.06	BC 22
				Min M_T	-1.27	-0.48	-5.30	⊳ -0.08	-2.65	-0.03	BC 7
				Max M_y	-0.11	-0.10	2.83	0.02	⊳ 1.57	-0.05	BC 21
				Min M_y	-1.61	-0.72	-6.44	-0.06	⊳ -3.23	0.11	BC 12
				Max M_z	1.46	-0.34	2.66	0.03	1.27	⊳ 0.44	BC 14
				Min M_z	-0.16	-0.03	-0.78	-0.01	-0.30	⊳ -0.25	BC 17
		71	3.260	Max N	⊳ 2.01	-0.10	2.68	0.12	1.33	0.06	BC 22
			Rechts	Min N	⊳ -1.67	-0.70	-6.38	-0.07	-3.18	0.01	BC 13
				Max V_y	0.00	⊳ 0.00	0.00	0.00	0.00	0.00	
				Min V_y	-1.61	⊳ -0.72	-6.44	-0.06	-3.23	0.11	BC 12
				Max V_z	-0.11	-0.10	⊳ 2.83	0.02	1.57	-0.05	BC 21
				Min V_z	-1.61	-0.72	⊳ -6.44	-0.06	-3.23	0.11	BC 12
				Max M_T	2.01	-0.10	2.68	⊳ 0.12	1.33	0.06	BC 22
				Min M_T	-1.27	-0.48	-5.30	⊳ -0.08	-2.65	-0.03	BC 7
				Max M_y	-0.11	-0.10	2.83	0.02	⊳ 1.57	-0.05	BC 21
				Min M_y	-1.61	-0.72	-6.44	-0.06	⊳ -3.23	0.11	BC 12
				Max M_z	1.46	-0.34	2.66	0.03	1.27	⊳ 0.44	BC 14
				Min M_z	-0.16	-0.03	-0.78	-0.01	-0.30	⊳ -0.25	BC 17
57	RC1	168	0.000	Max N	⊳ 0.00	0.00	0.00	0.00	0.00	0.00	
			Links	Min N	⊳ -4.93	1.60	4.51	0.03	-0.01	1.57	BC 12
				Max V_y	-4.78	⊳ 1.81	4.48	0.04	-0.01	1.83	BC 9
				Min V_y	-0.75	⊳ -0.18	-1.88	0.02	-0.00	-0.42	BC 14
				Max V_z	-4.93	1.60	⊳ 4.51	0.03	-0.01	1.57	BC 12
				Min V_z	-0.39	0.29	⊳ -1.94	0.03	0.00	0.27	BC 23
				Max M_T	-0.62	0.01	-1.89	⊳ 0.04	-0.00	-0.09	BC 22
				Min M_T	-1.10	0.53	1.72	⊳ -0.01	-0.00	0.58	BC 19
				Max M_y	-0.39	0.29	-1.94	0.03	⊳ 0.00	0.27	BC 23
				Min M_y	-4.93	1.60	4.51	0.03	⊳ -0.01	1.57	BC 12
				Max M_z	-4.78	1.81	4.48	0.04	-0.01	⊳ 1.83	BC 9
				Min M_z	-0.75	-0.18	-1.88	0.02	-0.00	⊳ -0.42	BC 14
			0.000	Max N	⊳ 0.00	0.00	0.00	0.00	0.00	0.00	
			Rechts	Min N	⊳ -4.93	1.60	4.51	0.03	-0.01	1.57	BC 12
				Max V_y	-4.78	⊳ 1.81	4.48	0.04	-0.01	1.83	BC 9
				Min V_y	-0.75	⊳ -0.18	-1.88	0.02	-0.00	-0.42	BC 14
				Max V_z	-4.93	1.60	⊳ 4.51	0.03	-0.01	1.57	BC 12
				Min V_z	-0.39	0.29	⊳ -1.94	0.03	0.00	0.27	BC 23
				Max M_T	-0.62	0.01	-1.89	⊳ 0.04	-0.00	-0.09	BC 22
				Min M_T	-1.10	0.53	1.72	⊳ -0.01	-0.00	0.58	BC 19
				Max M_y	-0.39	0.29	-1.94	0.03	⊳ 0.00	0.27	BC 23
				Min M_y	-4.93	1.60	4.51	0.03	⊳ -0.01	1.57	BC 12
				Max M_z	-4.78	1.81	4.48	0.04	-0.01	⊳ 1.83	BC 9
				Min M_z	-0.75	-0.18	-1.88	0.02	-0.00	⊳ -0.42	BC 14
			0.583	Max N	⊳ 0.00	0.00	0.00	0.00	0.00	0.00	
			Links	Min N	⊳ -4.52	1.40	3.33	0.03	2.36	0.66	BC 12
				Max V_y	-4.36	⊳ 1.59	3.30	0.03	2.34	0.81	BC 9
				Min V_y	-0.72	⊳ -0.21	-1.43	0.02	-1.01	-0.31	BC 14
				Max V_z	-4.52	1.40	⊳ 3.33	0.03	2.36	0.66	BC 12
				Min V_z	-0.34	0.24	⊳ -1.48	0.03	-1.04	0.10	BC 23
				Max M_T	-0.59	-0.02	-1.45	⊳ 0.05	-1.02	-0.10	BC 22
				Min M_T	-1.03	0.47	1.27	⊳ -0.01	0.90	0.28	BC 19
				Max M_y	-4.52	1.40	3.33	0.03	⊳ 2.36	0.66	BC 12
				Min M_y	-0.34	0.24	-1.48	0.03	⊳ -1.04	0.10	BC 23
				Max M_z	-4.36	1.59	3.30	0.03	2.34	⊳ 0.81	BC 9
				Min M_z	-0.72	-0.21	-1.43	0.02	-1.01	⊳ -0.31	BC 14
			0.583	Max N	⊳ 0.00	0.00	0.00	0.00	0.00	0.00	
			Rechts	Min N	⊳ -4.52	1.40	3.33	0.03	2.36	0.66	BC 12

4.12 DOORSNEDES - SNEDEKRACHTEN

Resultaatcombinaties

Staaf No.	RC	Knoop No.	Snede x [m]		Krachten [kN] N	V_y	V_z	Momenten [kNm] M_T	M_y	M_z	Bijbehorend Belastingsgeval
57	RC1			Max V_y	-4.36	▷ 1.59	3.30	0.03	2.34	0.81	BC 9
				Min V_y	-0.72	▷ -0.21	-1.43	0.02	-1.01	-0.31	BC 14
				Max V_z	-4.52	1.40	▷ 3.33	0.03	2.36	0.66	BC 12
				Min V_z	-0.34	0.24	▷ -1.48	0.03	-1.04	0.10	BC 23
				Max M_T	-0.59	-0.02	-1.45	▷ 0.05	-1.02	-0.10	BC 22
				Min M_T	-1.03	0.47	1.27	▷ -0.01	0.90	0.28	BC 19
				Max M_y	-4.52	1.40	3.33	0.03	▷ 2.36	0.66	BC 12
				Min M_y	-0.34	0.24	-1.48	0.03	▷ -1.04	0.10	BC 23
				Max M_z	-4.36	1.59	3.30	0.03	2.34	▷ 0.81	BC 9
				Min M_z	-0.72	-0.21	-1.43	0.02	-1.01	▷ -0.31	BC 14
			0.679	Max N	▷ 0.00	0.00	0.00	0.00	0.00	0.00	
			Links	Min N	▷ -4.39	1.33	2.95	0.03	2.66	0.52	BC 12
				Max V_y	-4.22	▷ 1.51	2.93	0.03	2.64	0.66	BC 9
				Min V_y	-0.72	▷ -0.22	-1.27	0.02	-1.14	-0.29	BC 14
				Max V_z	-4.39	1.33	▷ 2.95	0.03	2.66	0.52	BC 12
				Min V_z	-0.33	0.23	▷ -1.32	0.03	-1.18	0.08	BC 23
				Max M_T	-0.59	-0.03	-1.29	▷ 0.05	-1.15	-0.10	BC 22
				Min M_T	-1.01	0.45	1.12	▷ -0.01	1.02	0.24	BC 19
				Max M_y	-4.39	1.33	2.95	0.03	▷ 2.66	0.52	BC 12
				Min M_y	-0.33	0.23	-1.32	0.03	▷ -1.18	0.08	BC 23
				Max M_z	-4.22	1.51	2.93	0.03	2.64	▷ 0.66	BC 9
				Min M_z	-0.72	-0.22	-1.27	0.02	-1.14	▷ -0.29	BC 14
			0.679	Max N	▷ 0.00	0.00	0.00	0.00	0.00	0.00	
			Rechts	Min N	▷ -4.39	1.33	2.95	0.03	2.66	0.52	BC 12
				Max V_y	-4.22	▷ 1.51	2.93	0.03	2.64	0.66	BC 9
				Min V_y	-0.72	▷ -0.22	-1.27	0.02	-1.14	-0.29	BC 14
				Max V_z	-4.39	1.33	▷ 2.95	0.03	2.66	0.52	BC 12
				Min V_z	-0.33	0.23	▷ -1.32	0.03	-1.18	0.08	BC 23
				Max M_T	-0.59	-0.03	-1.29	▷ 0.05	-1.15	-0.10	BC 22
				Min M_T	-1.01	0.45	1.12	▷ -0.01	1.02	0.24	BC 19
				Max M_y	-4.39	1.33	2.95	0.03	▷ 2.66	0.52	BC 12
				Min M_y	-0.33	0.23	-1.32	0.03	▷ -1.18	0.08	BC 23
				Max M_z	-4.22	1.51	2.93	0.03	2.64	▷ 0.66	BC 9
				Min M_z	-0.72	-0.22	-1.27	0.02	-1.14	▷ -0.29	BC 14
			0.707	Max N	▷ 0.00	0.00	0.00	0.00	0.00	0.00	
			Links	Min N	▷ -4.34	1.30	2.83	0.03	2.74	0.49	BC 12
				Max V_y	-4.18	▷ 1.49	2.81	0.03	2.72	0.62	BC 9
				Min V_y	-0.72	▷ -0.22	-1.22	0.02	-1.18	-0.28	BC 14
				Max V_z	-4.34	1.30	▷ 2.83	0.03	2.74	0.49	BC 12
				Min V_z	-0.33	0.22	▷ -1.26	0.03	-1.21	0.07	BC 23
				Max M_T	-0.59	-0.03	-1.24	▷ 0.05	-1.19	-0.10	BC 22
				Min M_T	-1.01	0.44	1.08	▷ -0.01	1.05	0.23	BC 19
				Max M_y	-4.34	1.30	2.83	0.03	▷ 2.74	0.49	BC 12
				Min M_y	-0.33	0.22	-1.26	0.03	▷ -1.21	0.07	BC 23
				Max M_z	-4.18	1.49	2.81	0.03	2.72	▷ 0.62	BC 9
				Min M_z	-0.72	-0.22	-1.22	0.02	-1.18	▷ -0.28	BC 14
			0.707	Max N	▷ 0.00	0.00	0.00	0.00	0.00	0.00	
			Rechts	Min N	▷ -4.34	1.30	2.83	0.03	2.74	0.49	BC 12
				Max V_y	-4.18	▷ 1.49	2.81	0.03	2.72	0.62	BC 9
				Min V_y	-0.72	▷ -0.22	-1.22	0.02	-1.18	-0.28	BC 14
				Max V_z	-4.34	1.30	▷ 2.83	0.03	2.74	0.49	BC 12
				Min V_z	-0.33	0.22	▷ -1.26	0.03	-1.21	0.07	BC 23
				Max M_T	-0.59	-0.03	-1.24	▷ 0.05	-1.19	-0.10	BC 22
				Min M_T	-1.01	0.44	1.08	▷ -0.01	1.05	0.23	BC 19
				Max M_y	-4.34	1.30	2.83	0.03	▷ 2.74	0.49	BC 12
				Min M_y	-0.33	0.22	-1.26	0.03	▷ -1.21	0.07	BC 23
				Max M_z	-4.18	1.49	2.81	0.03	2.72	▷ 0.62	BC 9
				Min M_z	-0.72	-0.22	-1.22	0.02	-1.18	▷ -0.28	BC 14
			2.552	Max N	▷ 0.10	-0.01	2.14	0.00	-0.31	-0.13	BC 21
			Links	Min N	▷ -1.66	-0.17	-4.63	0.02	0.97	-0.54	BC 12
				Max V_y	-0.33	▷ 0.15	-0.56	0.00	0.17	-0.32	BC 17
				Min V_y	-0.59	▷ -0.39	2.03	0.02	-0.43	0.28	BC 14
				Max V_z	0.10	-0.01	▷ 2.14	0.00	-0.31	-0.13	BC 21
				Min V_z	-1.63	-0.13	▷ -4.63	0.03	0.97	-0.58	BC 8
				Max M_T	-0.47	-0.17	2.01	▷ 0.05	-0.47	0.09	BC 22
				Min M_T	-0.59	0.07	-1.80	▷ -0.01	0.38	-0.25	BC 19
				Max M_y	-1.46	-0.12	-4.59	0.02	▷ 0.98	-0.62	BC 13
				Min M_y	-0.47	-0.17	2.01	0.05	▷ -0.47	0.09	BC 22
				Max M_z	-0.59	-0.39	2.03	0.02	-0.43	▷ 0.28	BC 14
				Min M_z	-1.42	-0.08	-4.59	0.02	0.97	▷ -0.67	BC 9
			2.552	Max N	▷ 0.10	-0.01	2.14	0.00	-0.31	-0.13	BC 21
			Rechts	Min N	▷ -1.66	-0.17	-4.63	0.02	0.97	-0.54	BC 12
				Max V_y	-0.33	▷ 0.15	-0.56	0.00	0.17	-0.32	BC 17
				Min V_y	-0.59	▷ -0.39	2.03	0.02	-0.43	0.28	BC 14
				Max V_z	0.10	-0.01	▷ 2.14	0.00	-0.31	-0.13	BC 21
				Min V_z	-1.63	-0.13	▷ -4.63	0.03	0.97	-0.58	BC 8
				Max M_T	-0.47	-0.17	2.01	▷ 0.05	-0.47	0.09	BC 22
				Min M_T	-0.59	0.07	-1.80	▷ -0.01	0.38	-0.25	BC 19
				Max M_y	-1.46	-0.12	-4.59	0.02	▷ 0.98	-0.62	BC 13
				Min M_y	-0.47	-0.17	2.01	0.05	▷ -0.47	0.09	BC 22
				Max M_z	-0.59	-0.39	2.03	0.02	-0.43	▷ 0.28	BC 14
				Min M_z	-1.42	-0.08	-4.59	0.02	0.97	▷ -0.67	BC 9
			2.581	Max N	▷ 0.11	-0.02	2.19	0.00	-0.25	-0.13	BC 21
			Links	Min N	▷ -1.62	-0.19	-4.74	0.02	0.84	-0.54	BC 12

4.12 DOORSNEDES - SNEDEKRACHTEN

Resultaatcombinaties

Staaf No.	RC	Knoop No.	Snede x [m]		Krachten [kN] N	V_y	V_z	Momenten [kNm] M_T	M_y	M_z	Bijbehorend Belastingsgeval
57	RC1			Max V_y	-0.32	▷ 0.14	-0.57	0.00	0.16	-0.33	BC 17
				Min V_y	-0.59	▷ -0.39	2.07	0.02	-0.38	0.29	BC 14
				Max V_z	0.11	-0.02	▷ 2.19	0.00	-0.25	-0.13	BC 21
				Min V_z	-1.59	-0.15	▷ -4.74	0.03	0.83	-0.58	BC 8
				Max M_T	-0.46	-0.18	2.06	▷ 0.05	-0.41	0.10	BC 22
				Min M_T	-0.59	0.06	-1.85	▷ -0.01	0.33	-0.25	BC 19
				Max M_y	-1.41	-0.14	-4.70	0.02	▷ 0.85	-0.62	BC 13
				Min M_y	-0.46	-0.18	2.06	0.05	▷ -0.41	0.10	BC 22
				Max M_z	-0.59	-0.39	2.07	0.02	-0.38	▷ 0.29	BC 14
				Min M_z	-1.38	-0.10	-4.70	0.02	0.84	▷ -0.66	BC 9
			2.581	Max N	▷ 0.11	-0.02	2.19	0.00	-0.25	-0.13	BC 21
			Rechts	Min N	▷ -1.62	-0.19	-4.74	0.02	0.84	-0.54	BC 12
				Max V_y	-0.32	▷ 0.14	-0.57	0.00	0.16	-0.33	BC 17
				Min V_y	-0.59	▷ -0.39	2.07	0.02	-0.38	0.29	BC 14
				Max V_z	0.11	-0.02	▷ 2.19	0.00	-0.25	-0.13	BC 21
				Min V_z	-1.59	-0.15	▷ -4.74	0.03	0.83	-0.58	BC 8
				Max M_T	-0.46	-0.18	2.06	▷ 0.05	-0.41	0.10	BC 22
				Min M_T	-0.59	0.06	-1.85	▷ -0.01	0.33	-0.25	BC 19
				Max M_y	-1.41	-0.14	-4.70	0.02	▷ 0.85	-0.62	BC 13
				Min M_y	-0.46	-0.18	2.06	0.05	▷ -0.41	0.10	BC 22
				Max M_z	-0.59	-0.39	2.07	0.02	-0.38	▷ 0.29	BC 14
				Min M_z	-1.38	-0.10	-4.70	0.02	0.84	▷ -0.66	BC 9
			2.677	Max N	▷ 0.12	-0.03	2.36	0.00	-0.03	-0.13	BC 21
			Links	Min N	▷ -1.49	-0.26	-5.09	0.02	0.37	-0.51	BC 12
				Max V_y	-0.30	▷ 0.12	-0.62	0.00	0.10	-0.34	BC 17
				Min V_y	-0.58	▷ -0.40	2.23	0.02	-0.17	0.33	BC 14
				Max V_z	0.12	-0.03	▷ 2.36	0.00	-0.03	-0.13	BC 21
				Min V_z	-1.46	-0.22	▷ -5.09	0.03	0.36	-0.56	BC 8
				Max M_T	-0.46	-0.18	2.22	▷ 0.05	-0.21	0.12	BC 22
				Min M_T	-0.57	0.04	-1.99	▷ -0.01	0.15	-0.25	BC 19
				Max M_y	-1.28	-0.22	-5.04	0.01	▷ 0.38	-0.60	BC 13
				Min M_y	-0.46	-0.18	2.22	0.05	▷ -0.21	0.12	BC 22
				Max M_z	-0.58	-0.40	2.23	0.02	-0.17	▷ 0.33	BC 14
				Min M_z	-1.25	-0.17	-5.05	0.02	0.37	▷ -0.65	BC 9
			2.677	Max N	▷ 0.12	-0.03	2.36	0.00	-0.03	-0.13	BC 21
			Rechts	Min N	▷ -1.49	-0.26	-5.09	0.02	0.37	-0.51	BC 12
				Max V_y	-0.30	▷ 0.12	-0.62	0.00	0.10	-0.34	BC 17
				Min V_y	-0.58	▷ -0.40	2.23	0.02	-0.17	0.33	BC 14
				Max V_z	0.12	-0.03	▷ 2.36	0.00	-0.03	-0.13	BC 21
				Min V_z	-1.46	-0.22	▷ -5.09	0.03	0.36	-0.56	BC 8
				Max M_T	-0.46	-0.18	2.22	▷ 0.05	-0.21	0.12	BC 22
				Min M_T	-0.57	0.04	-1.99	▷ -0.01	0.15	-0.25	BC 19
				Max M_y	-1.28	-0.22	-5.04	0.01	▷ 0.38	-0.60	BC 13
				Min M_y	-0.46	-0.18	2.22	0.05	▷ -0.21	0.12	BC 22
				Max M_z	-0.58	-0.40	2.23	0.02	-0.17	▷ 0.33	BC 14
				Min M_z	-1.25	-0.17	-5.05	0.02	0.37	▷ -0.65	BC 9
			3.260	Max N	▷ 0.17	-0.08	2.81	0.00	1.52	-0.09	BC 21
			Links	Min N	▷ -1.24	-0.31	-5.14	0.01	-2.54	-0.14	BC 6
				Max V_y	-0.23	▷ 0.06	-0.79	0.00	-0.32	-0.39	BC 17
				Min V_y	-1.17	▷ -0.44	-6.03	0.02	-2.96	-0.27	BC 12
				Max V_z	0.17	-0.08	▷ 2.81	0.00	1.52	-0.09	BC 21
				Min V_z	-1.13	-0.40	▷ -6.03	0.02	-2.97	-0.35	BC 8
				Max M_T	-0.43	-0.21	2.66	▷ 0.05	1.26	0.24	BC 22
				Min M_T	-0.49	-0.02	-2.44	▷ -0.01	-1.18	-0.25	BC 19
				Max M_y	0.17	-0.08	2.81	0.00	▷ 1.52	-0.09	BC 21
				Min M_y	-1.13	-0.40	-6.03	0.02	▷ -2.97	-0.35	BC 8
				Max M_z	-0.56	-0.42	2.68	0.02	1.31	▷ 0.57	BC 14
				Min M_z	-0.72	-0.17	-5.05	0.01	-2.48	▷ -0.52	BC 3
		72	3.260	Max N	▷ 0.17	-0.08	2.81	0.00	1.52	-0.09	BC 21
			Rechts	Min N	▷ -1.24	-0.31	-5.14	0.01	-2.54	-0.14	BC 6
				Max V_y	-0.23	▷ 0.06	-0.79	0.00	-0.32	-0.39	BC 17
				Min V_y	-1.17	▷ -0.44	-6.03	0.02	-2.96	-0.27	BC 12
				Max V_z	0.17	-0.08	▷ 2.81	0.00	1.52	-0.09	BC 21
				Min V_z	-1.13	-0.40	▷ -6.03	0.02	-2.98	-0.35	BC 8
				Max M_T	-0.43	-0.21	2.66	▷ 0.05	1.26	0.24	BC 22
				Min M_T	-0.49	-0.02	-2.44	▷ -0.01	-1.18	-0.25	BC 19
				Max M_y	0.17	-0.08	2.81	0.00	▷ 1.52	-0.09	BC 21
				Min M_y	-1.13	-0.40	-6.03	0.02	▷ -2.98	-0.35	BC 8
				Max M_z	-0.56	-0.42	2.68	0.02	1.31	▷ 0.57	BC 14
				Min M_z	-0.72	-0.17	-5.05	0.01	-2.48	▷ -0.52	BC 3
58	RC1	170	0.000	Max N	▷ 3.06	-0.21	-1.78	-0.02	-0.00	-0.44	BC 14
			Links	Min N	▷ -17.05	1.78	4.14	0.14	-0.01	1.98	BC 9
				Max V_y	-17.05	▷ 1.78	4.14	0.14	-0.01	1.98	BC 9
				Min V_y	3.06	▷ -0.21	-1.78	-0.02	-0.00	-0.44	BC 14
				Max V_z	-16.41	1.62	▷ 4.17	0.14	-0.02	1.76	BC 12
				Min V_z	0.92	0.21	▷ -1.85	-0.04	0.00	0.15	BC 23
				Max M_T	-16.41	1.62	4.17	▷ 0.14	-0.02	1.76	BC 12
				Min M_T	0.92	0.21	-1.85	▷ -0.04	0.00	0.15	BC 23
				Max M_y	0.92	0.21	-1.85	-0.04	▷ 0.00	0.15	BC 23
				Min M_y	-16.41	1.62	4.17	0.14	▷ -0.02	1.76	BC 12
				Max M_z	-17.05	1.78	4.14	0.14	-0.01	▷ 1.98	BC 9
				Min M_z	3.06	-0.21	-1.78	-0.02	-0.00	▷ -0.44	BC 14
			0.000	Max N	▷ 3.06	-0.21	-1.78	-0.02	-0.00	-0.44	BC 14
			Rechts	Min N	▷ -17.05	1.78	4.14	0.14	-0.01	1.98	BC 9

4.12 DOORSNEDES - SNEDEKRACHTEN

Resultaatcombinaties

Staaf No.	RC	Knoop No.	Snede x [m]		Krachten [kN] N	V_y	V_z	Momenten [kNm] M_T	M_y	M_z	Bijbehorend Belastingsgeval
58	RC1			Max V_y	-17.05	▷ 1.78	4.14	0.14	-0.01	1.98	BC 9
				Min V_y	3.06	▷ -0.21	-1.78	-0.02	-0.00	-0.44	BC 14
				Max V_z	-16.41	1.62	▷ 4.17	0.14	-0.02	1.76	BC 12
				Min V_z	0.92	0.21	▷ -1.85	-0.04	0.00	0.15	BC 23
				Max M_T	-16.41	1.62	4.17	▷ 0.14	-0.02	1.76	BC 12
				Min M_T	0.92	0.21	-1.85	▷ -0.04	0.00	0.15	BC 23
				Max M_y	0.92	0.21	-1.85	-0.04	▷ 0.00	0.15	BC 23
				Min M_y	-16.41	1.62	4.17	0.14	▷ -0.02	1.76	BC 12
				Max M_z	-17.05	1.78	4.14	0.14	-0.01	▷ 1.98	BC 9
				Min M_z	3.06	-0.21	-1.78	-0.02	-0.00	▷ -0.44	BC 14
			0.583	Max N	▷ 3.08	-0.23	-1.34	-0.02	-0.96	-0.32	BC 14
			Links	Min N	▷ -16.65	1.66	3.01	0.13	2.15	0.95	BC 9
				Max V_y	-16.65	▷ 1.66	3.01	0.13	2.15	0.95	BC 9
				Min V_y	3.08	▷ -0.23	-1.34	-0.02	-0.96	-0.32	BC 14
				Max V_z	-16.02	1.49	▷ 3.03	0.14	2.16	0.82	BC 12
				Min V_z	0.96	0.17	▷ -1.39	-0.04	-0.99	0.02	BC 23
				Max M_T	-16.02	1.49	3.03	▷ 0.14	2.16	0.82	BC 12
				Min M_T	0.96	0.17	-1.39	▷ -0.04	-0.99	0.02	BC 23
				Max M_y	-16.47	1.54	3.03	0.14	▷ 2.17	0.86	BC 8
				Min M_y	0.96	0.17	-1.39	-0.04	▷ -0.99	0.02	BC 23
				Max M_z	-16.65	1.66	3.01	0.13	2.15	▷ 0.95	BC 9
				Min M_z	3.08	-0.23	-1.34	-0.02	-0.96	▷ -0.32	BC 14
			0.583	Max N	▷ 3.08	-0.23	-1.34	-0.02	-0.96	-0.32	BC 14
			Rechts	Min N	▷ -16.65	1.66	3.01	0.13	2.15	0.95	BC 9
				Max V_y	-16.65	▷ 1.66	3.01	0.13	2.15	0.95	BC 9
				Min V_y	3.08	▷ -0.23	-1.34	-0.02	-0.96	-0.32	BC 14
				Max V_z	-16.02	1.49	▷ 3.03	0.14	2.16	0.82	BC 12
				Min V_z	0.96	0.17	▷ -1.39	-0.04	-0.99	0.02	BC 23
				Max M_T	-16.02	1.49	3.03	▷ 0.14	2.16	0.82	BC 12
				Min M_T	0.96	0.17	-1.39	▷ -0.04	-0.99	0.02	BC 23
				Max M_y	-16.47	1.54	3.03	0.14	▷ 2.17	0.86	BC 8
				Min M_y	0.96	0.17	-1.39	-0.04	▷ -0.99	0.02	BC 23
				Max M_z	-16.65	1.66	3.01	0.13	2.15	▷ 0.95	BC 9
				Min M_z	3.08	-0.23	-1.34	-0.02	-0.96	▷ -0.32	BC 14
			0.679	Max N	▷ 3.09	-0.24	-1.18	-0.02	-1.08	-0.30	BC 14
			Links	Min N	▷ -16.52	1.59	2.65	0.13	2.43	0.79	BC 9
				Max V_y	-16.52	▷ 1.59	2.65	0.13	2.43	0.79	BC 9
				Min V_y	3.09	▷ -0.24	-1.18	-0.02	-1.08	-0.30	BC 14
				Max V_z	-15.90	1.43	▷ 2.66	0.14	2.44	0.67	BC 12
				Min V_z	0.97	0.15	▷ -1.22	-0.04	-1.11	0.00	BC 23
				Max M_T	-15.90	1.43	2.66	▷ 0.14	2.44	0.67	BC 12
				Min M_T	0.97	0.15	-1.22	▷ -0.04	-1.11	0.00	BC 23
				Max M_y	-16.35	1.48	2.66	0.14	▷ 2.44	0.72	BC 8
				Min M_y	0.97	0.15	-1.22	-0.04	▷ -1.11	0.00	BC 23
				Max M_z	-16.52	1.59	2.65	0.13	2.43	▷ 0.79	BC 9
				Min M_z	3.09	-0.24	-1.18	-0.02	-1.08	▷ -0.30	BC 14
			0.679	Max N	▷ 3.09	-0.24	-1.18	-0.02	-1.08	-0.30	BC 14
			Rechts	Min N	▷ -16.52	1.59	2.65	0.13	2.43	0.79	BC 9
				Max V_y	-16.52	▷ 1.59	2.65	0.13	2.43	0.79	BC 9
				Min V_y	3.09	▷ -0.24	-1.18	-0.02	-1.08	-0.30	BC 14
				Max V_z	-15.90	1.43	▷ 2.66	0.14	2.44	0.67	BC 12
				Min V_z	0.97	0.15	▷ -1.22	-0.04	-1.11	0.00	BC 23
				Max M_T	-15.90	1.43	2.66	▷ 0.14	2.44	0.67	BC 12
				Min M_T	0.97	0.15	-1.22	▷ -0.04	-1.11	0.00	BC 23
				Max M_y	-16.35	1.48	2.66	0.14	▷ 2.44	0.72	BC 8
				Min M_y	0.97	0.15	-1.22	-0.04	▷ -1.11	0.00	BC 23
				Max M_z	-16.52	1.59	2.65	0.13	2.43	▷ 0.79	BC 9
				Min M_z	3.09	-0.24	-1.18	-0.02	-1.08	▷ -0.30	BC 14
			0.707	Max N	▷ 3.09	-0.24	-1.13	-0.02	-1.11	-0.29	BC 14
			Links	Min N	▷ -16.48	1.57	2.54	0.13	2.50	0.74	BC 9
				Max V_y	-16.48	▷ 1.57	2.54	0.13	2.50	0.74	BC 9
				Min V_y	3.09	▷ -0.24	-1.13	-0.02	-1.11	-0.29	BC 14
				Max V_z	-15.86	1.41	▷ 2.55	0.14	2.51	0.63	BC 12
				Min V_z	0.98	0.15	▷ -1.17	-0.04	-1.15	0.00	BC 23
				Max M_T	-15.86	1.41	2.55	▷ 0.14	2.51	0.63	BC 12
				Min M_T	0.98	0.15	-1.17	▷ -0.04	-1.15	0.00	BC 23
				Max M_y	-16.31	1.46	2.55	0.14	▷ 2.51	0.67	BC 8
				Min M_y	0.98	0.15	-1.17	-0.04	▷ -1.15	0.00	BC 23
				Max M_z	-16.48	1.57	2.54	0.13	2.50	▷ 0.74	BC 9
				Min M_z	3.09	-0.24	-1.13	-0.02	-1.11	▷ -0.29	BC 14
			0.707	Max N	▷ 3.09	-0.24	-1.13	-0.02	-1.11	-0.29	BC 14
			Rechts	Min N	▷ -16.48	1.57	2.54	0.13	2.50	0.74	BC 9
				Max V_y	-16.48	▷ 1.57	2.54	0.13	2.50	0.74	BC 9
				Min V_y	3.09	▷ -0.24	-1.13	-0.02	-1.11	-0.29	BC 14
				Max V_z	-15.86	1.41	▷ 2.55	0.14	2.51	0.63	BC 12
				Min V_z	0.98	0.15	▷ -1.17	-0.04	-1.15	0.00	BC 23
				Max M_T	-15.86	1.41	2.55	▷ 0.14	2.51	0.63	BC 12
				Min M_T	0.98	0.15	-1.17	▷ -0.04	-1.15	0.00	BC 23
				Max M_y	-16.31	1.46	2.55	0.14	▷ 2.51	0.67	BC 8
				Min M_y	0.98	0.15	-1.17	-0.04	▷ -1.15	0.00	BC 23
				Max M_z	-16.48	1.57	2.54	0.13	2.50	▷ 0.74	BC 9
				Min M_z	3.09	-0.24	-1.13	-0.02	-1.11	▷ -0.29	BC 14
			2.552	Max N	▷ 3.22	-0.40	2.09	-0.02	-0.23	0.30	BC 14
			Links	Min N	▷ -13.92	0.07	-4.59	0.13	0.48	-0.81	BC 9

4.12 DOORSNEDES - SNEDEKRACHTEN

Resultaatcombinaties

Staaf No.	RC	Knoop No.	Snede x [m]		Krachten [kN] N	V_y	V_z	Momenten [kNm] M_T	M_y	M_z	Bijbehorend Belastingsgeval
58	RC1			Max V_y	-4.71	▷ 0.18	-0.60	0.03	0.09	-0.36	BC 17
				Min V_y	3.22	▷ -0.40	2.09	-0.02	-0.23	0.30	BC 14
				Max V_z	1.59	-0.06	▷ 2.20	-0.02	-0.15	-0.09	BC 21
				Min V_z	-13.82	0.04	▷ -4.62	0.13	0.47	-0.74	BC 8
				Max M_T	-13.37	0.00	-4.62	▷ 0.13	0.48	-0.70	BC 12
				Min M_T	1.25	-0.14	2.16	▷ -0.03	-0.23	-0.01	BC 23
				Max M_y	-13.47	0.04	-4.58	0.13	▷ 0.49	-0.77	BC 13
				Min M_y	1.43	-0.22	2.09	-0.02	▷ -0.25	0.13	BC 22
				Max M_z	3.22	-0.40	2.09	-0.02	-0.23	▷ 0.30	BC 14
				Min M_z	-13.92	0.07	-4.59	0.13	0.48	▷ -0.81	BC 9
			2.552	Max N	▷ 3.22	-0.40	2.09	-0.02	-0.23	0.30	BC 14
			Rechts	Min N	▷ -13.92	0.07	-4.59	0.13	0.48	-0.81	BC 9
				Max V_y	-4.71	▷ 0.18	-0.60	0.03	0.09	-0.36	BC 17
				Min V_y	3.22	▷ -0.40	2.09	-0.02	-0.23	0.30	BC 14
				Max V_z	1.59	-0.06	▷ 2.20	-0.02	-0.15	-0.09	BC 21
				Min V_z	-13.82	0.04	▷ -4.62	0.13	0.47	-0.74	BC 8
				Max M_T	-13.37	0.00	-4.62	▷ 0.13	0.48	-0.70	BC 12
				Min M_T	1.25	-0.14	2.16	▷ -0.03	-0.23	-0.01	BC 23
				Max M_y	-13.47	0.04	-4.58	0.13	▷ 0.49	-0.77	BC 13
				Min M_y	1.43	-0.22	2.09	-0.02	▷ -0.25	0.13	BC 22
				Max M_z	3.22	-0.40	2.09	-0.02	-0.23	▷ 0.30	BC 14
				Min M_z	-13.92	0.07	-4.59	0.13	0.48	▷ -0.81	BC 9
			2.581	Max N	▷ 3.22	-0.40	2.14	-0.02	-0.17	0.31	BC 14
			Links	Min N	▷ -13.88	0.05	-4.69	0.13	0.35	-0.81	BC 9
				Max V_y	-4.70	▷ 0.17	-0.61	0.03	0.07	-0.36	BC 17
				Min V_y	3.22	▷ -0.40	2.14	-0.02	-0.17	0.31	BC 14
				Max V_z	1.59	-0.06	▷ 2.25	-0.02	-0.09	-0.09	BC 21
				Min V_z	-13.78	0.02	▷ -4.73	0.13	0.34	-0.74	BC 8
				Max M_T	-13.33	-0.02	-4.72	▷ 0.13	0.35	-0.70	BC 12
				Min M_T	1.25	-0.14	2.22	▷ -0.03	-0.17	-0.00	BC 23
				Max M_y	-13.43	0.01	-4.68	0.13	▷ 0.36	-0.77	BC 13
				Min M_y	1.43	-0.22	2.14	-0.02	▷ -0.19	0.14	BC 22
				Max M_z	3.22	-0.40	2.14	-0.02	-0.17	▷ 0.31	BC 14
				Min M_z	-13.88	0.05	-4.69	0.13	0.35	▷ -0.81	BC 9
			2.581	Max N	▷ 3.22	-0.40	2.14	-0.02	-0.17	0.31	BC 14
			Rechts	Min N	▷ -13.88	0.05	-4.69	0.13	0.35	-0.81	BC 9
				Max V_y	-4.70	▷ 0.17	-0.61	0.03	0.07	-0.36	BC 17
				Min V_y	3.22	▷ -0.40	2.14	-0.02	-0.17	0.31	BC 14
				Max V_z	1.59	-0.06	▷ 2.25	-0.02	-0.09	-0.09	BC 21
				Min V_z	-13.78	0.02	▷ -4.73	0.13	0.34	-0.74	BC 8
				Max M_T	-13.33	-0.02	-4.72	▷ 0.13	0.35	-0.70	BC 12
				Min M_T	1.25	-0.14	2.22	▷ -0.03	-0.17	-0.00	BC 23
				Max M_y	-13.43	0.01	-4.68	0.13	▷ 0.36	-0.77	BC 13
				Min M_y	1.43	-0.22	2.14	-0.02	▷ -0.19	0.14	BC 22
				Max M_z	3.22	-0.40	2.14	-0.02	-0.17	▷ 0.31	BC 14
				Min M_z	-13.88	0.05	-4.69	0.13	0.35	▷ -0.81	BC 9
			2.677	Max N	▷ 3.22	-0.41	2.30	-0.02	0.04	0.35	BC 14
			Links	Min N	▷ -13.75	-0.03	-5.01	0.12	-0.12	-0.81	BC 9
				Max V_y	-4.68	▷ 0.15	-0.66	0.03	0.01	-0.38	BC 17
				Min V_y	3.22	▷ -0.41	2.30	-0.02	0.04	0.35	BC 14
				Max V_z	1.60	-0.08	▷ 2.41	-0.02	0.14	-0.08	BC 21
				Min V_z	-13.66	-0.05	▷ -5.05	0.13	-0.13	-0.73	BC 8
				Max M_T	-13.21	-0.09	-5.05	▷ 0.13	-0.12	-0.69	BC 12
				Min M_T	1.27	-0.16	2.38	▷ -0.03	0.05	0.01	BC 23
				Max M_y	1.60	-0.08	2.41	-0.02	▷ 0.14	-0.08	BC 21
				Min M_y	-11.80	0.04	-4.34	0.11	▷ -0.14	-0.58	BC 2
				Max M_z	3.22	-0.41	2.30	-0.02	0.04	▷ 0.35	BC 14
				Min M_z	-13.75	-0.03	-5.01	0.12	-0.12	▷ -0.81	BC 9
			2.677	Max N	▷ 3.22	-0.41	2.30	-0.02	0.04	0.35	BC 14
			Rechts	Min N	▷ -13.75	-0.03	-5.01	0.12	-0.12	-0.81	BC 9
				Max V_y	-4.68	▷ 0.15	-0.66	0.03	0.01	-0.38	BC 17
				Min V_y	3.22	▷ -0.41	2.30	-0.02	0.04	0.35	BC 14
				Max V_z	1.60	-0.08	▷ 2.41	-0.02	0.14	-0.08	BC 21
				Min V_z	-13.66	-0.05	▷ -5.05	0.13	-0.13	-0.73	BC 8
				Max M_T	-13.21	-0.09	-5.05	▷ 0.13	-0.12	-0.69	BC 12
				Min M_T	1.27	-0.16	2.38	▷ -0.03	0.05	0.01	BC 23
				Max M_y	1.60	-0.08	2.41	-0.02	▷ 0.14	-0.08	BC 21
				Min M_y	-11.80	0.04	-4.34	0.11	▷ -0.14	-0.58	BC 2
				Max M_z	3.22	-0.41	2.30	-0.02	0.04	▷ 0.35	BC 14
				Min M_z	-13.75	-0.03	-5.01	0.12	-0.12	▷ -0.81	BC 9
			3.260	Max N	▷ 3.25	-0.45	2.74	-0.02	1.56	0.60	BC 14
			Links	Min N	▷ -13.44	-0.25	-5.85	0.12	-3.37	-0.70	BC 9
				Max V_y	-4.61	▷ 0.08	-0.82	0.03	-0.43	-0.44	BC 17
				Min V_y	3.25	▷ -0.45	2.74	-0.02	1.56	0.60	BC 14
				Max V_z	1.65	-0.12	▷ 2.87	-0.02	1.72	-0.02	BC 21
				Min V_z	-13.36	-0.26	▷ -5.90	0.13	-3.41	-0.62	BC 8
				Max M_T	-12.92	-0.28	-5.90	▷ 0.13	-3.40	-0.56	BC 12
				Min M_T	1.31	-0.20	2.84	▷ -0.03	1.62	0.13	BC 23
				Max M_y	1.65	-0.12	2.87	-0.02	▷ 1.72	-0.02	BC 21
				Min M_y	-13.36	-0.26	-5.90	0.13	▷ -3.41	-0.62	BC 8
				Max M_z	3.25	-0.45	2.74	-0.02	1.56	▷ 0.60	BC 14
				Min M_z	-11.77	-0.07	-5.02	0.10	-2.90	▷ -0.72	BC 3
		73	3.260	Max N	▷ 3.25	-0.45	2.74	-0.02	1.56	0.60	BC 14
			Rechts	Min N	▷ -13.44	-0.25	-5.85	0.12	-3.37	-0.70	BC 9

4.12 DOORSNEDES - SNEDEKRACHTEN

Resultaatcombinaties

Staaf No.	RC	Knoop No.	Snede x [m]		Krachten [kN] N	V_y	V_z	Momenten [kNm] M_T	M_y	M_z	Bijbehorend Belastingsgeval
58	RC1			Max V_y	-4.61	▷ 0.08	-0.82	0.03	-0.43	-0.44	BC 17
				Min V_y	3.25	▷ -0.45	2.74	-0.02	1.56	0.60	BC 14
				Max V_z	1.65	-0.12	▷ 2.87	-0.02	1.72	-0.02	BC 21
				Min V_z	-13.36	-0.26	▷ -5.90	0.13	-3.41	-0.62	BC 8
				Max M_T	-12.92	-0.28	-5.90	▷ 0.13	-3.40	-0.56	BC 12
				Min M_T	1.31	-0.20	2.84	▷ -0.03	1.62	0.13	BC 23
				Max M_y	1.65	-0.12	2.87	-0.02	▷ 1.72	-0.02	BC 21
				Min M_y	-13.36	-0.26	-5.90	0.13	▷ -3.41	-0.62	BC 8
				Max M_z	3.25	-0.45	2.74	-0.02	1.56	▷ 0.60	BC 14
				Min M_z	-11.77	-0.07	-5.02	0.10	-2.90	▷ -0.72	BC 3
	Snede No.1 - 5 : T-Rechthoek 200/730 - T-Rechthoek 200/320										
181	RC1	34	0.000	Max N	▷ 0.00	0.00	0.00	0.00	0.00	0.00	
			Links	Min N	▷ -5.24	0.42	45.88	-0.01	-128.93	1.17	BC 11
				Max V_y	-2.97	▷ 2.96	-3.61	0.91	11.18	8.27	BC 23
				Min V_y	-2.19	▷ -1.20	38.95	-0.33	-110.02	-3.35	BC 6
				Max V_z	-3.86	-0.00	▷ 52.27	0.00	-147.53	-0.00	BC 8
				Min V_z	-3.69	0.77	▷ -16.29	0.05	48.18	2.15	BC 21
				Max M_T	-2.97	2.96	-3.61	▷ 0.91	11.18	8.27	BC 23
				Min M_T	-1.01	-1.14	18.32	▷ -0.38	-51.74	-3.18	BC 18
				Max M_y	-3.69	0.77	-16.29	0.05	▷ 48.18	2.15	BC 21
				Min M_y	-3.86	-0.00	52.27	0.00	▷ -147.53	-0.00	BC 8
				Max M_z	-2.97	2.96	-3.61	0.91	11.18	▷ 8.27	BC 23
				Min M_z	-2.19	-1.20	38.95	-0.33	-110.02	▷ -3.35	BC 6
			0.000	Max N	▷ 0.00	0.00	0.00	0.00	0.00	0.00	
			Rechts	Min N	▷ -5.24	0.42	45.88	-0.01	-128.93	1.17	BC 11
				Max V_y	-2.97	▷ 2.96	-3.61	0.91	11.18	8.27	BC 23
				Min V_y	-2.19	▷ -1.20	38.95	-0.33	-110.02	-3.35	BC 6
				Max V_z	-3.86	-0.00	▷ 52.27	0.00	-147.53	-0.00	BC 8
				Min V_z	-3.69	0.77	▷ -16.29	0.05	48.18	2.15	BC 21
				Max M_T	-2.97	2.96	-3.61	▷ 0.91	11.18	8.27	BC 23
				Min M_T	-1.01	-1.14	18.32	▷ -0.38	-51.74	-3.18	BC 18
				Max M_y	-3.69	0.77	-16.29	0.05	▷ 48.18	2.15	BC 21
				Min M_y	-3.86	-0.00	52.27	0.00	▷ -147.53	-0.00	BC 8
				Max M_z	-2.97	2.96	-3.61	0.91	11.18	▷ 8.27	BC 23
				Min M_z	-2.19	-1.20	38.95	-0.33	-110.02	▷ -3.35	BC 6
			0.679	Max N	▷ 0.00	0.00	0.00	0.00	0.00	0.00	
			Links	Min N	▷ -4.33	0.41	43.86	-0.02	-98.32	0.89	BC 11
				Max V_y	-2.76	▷ 2.85	-3.75	0.91	8.65	6.28	BC 23
				Min V_y	-1.54	▷ -1.16	37.27	-0.33	-84.02	-2.57	BC 6
				Max V_z	-2.94	-0.00	▷ 50.08	0.00	-112.62	-0.00	BC 8
				Min V_z	-3.48	0.74	▷ -16.09	0.05	37.11	1.63	BC 21
				Max M_T	-2.76	2.85	-3.75	▷ 0.91	8.65	6.28	BC 23
				Min M_T	-0.73	-1.10	17.42	▷ -0.38	-39.57	-2.42	BC 18
				Max M_y	-3.48	0.74	-16.09	0.05	▷ 37.11	1.63	BC 21
				Min M_y	-2.94	-0.00	50.08	0.00	▷ -112.62	-0.00	BC 8
				Max M_z	-2.76	2.85	-3.75	0.91	8.65	▷ 6.28	BC 23
				Min M_z	-1.54	-1.16	37.27	-0.33	-84.02	▷ -2.57	BC 6
			0.679	Max N	▷ 0.00	0.00	0.00	0.00	0.00	0.00	
			Rechts	Min N	▷ -4.33	0.41	43.86	-0.02	-98.32	0.89	BC 11
				Max V_y	-2.76	▷ 2.85	-3.75	0.91	8.65	6.28	BC 23
				Min V_y	-1.54	▷ -1.16	37.27	-0.33	-84.02	-2.57	BC 6
				Max V_z	-2.94	-0.00	▷ 50.08	0.00	-112.62	-0.00	BC 8
				Min V_z	-3.48	0.74	▷ -16.09	0.05	37.11	1.63	BC 21
				Max M_T	-2.76	2.85	-3.75	▷ 0.91	8.65	6.28	BC 23
				Min M_T	-0.73	-1.10	17.42	▷ -0.38	-39.57	-2.42	BC 18
				Max M_y	-3.48	0.74	-16.09	0.05	▷ 37.11	1.63	BC 21
				Min M_y	-2.94	-0.00	50.08	0.00	▷ -112.62	-0.00	BC 8
				Max M_z	-2.76	2.85	-3.75	0.91	8.65	▷ 6.28	BC 23
				Min M_z	-1.54	-1.16	37.27	-0.33	-84.02	▷ -2.57	BC 6
			0.707	Max N	▷ 0.00	0.00	0.00	0.00	0.00	0.00	
			Links	Min N	▷ -4.27	0.41	43.72	-0.02	-97.09	0.88	BC 11
				Max V_y	-2.75	▷ 2.84	-3.74	0.91	8.55	6.20	BC 23
				Min V_y	-1.50	▷ -1.16	37.16	-0.33	-82.97	-2.53	BC 6
				Max V_z	-2.89	-0.00	▷ 49.93	0.00	-111.21	-0.00	BC 8
				Min V_z	-3.47	0.74	▷ -16.05	0.05	36.66	1.61	BC 21
				Max M_T	-2.75	2.84	-3.74	▷ 0.91	8.55	6.20	BC 23
				Min M_T	-0.72	-1.10	17.38	▷ -0.38	-39.08	-2.39	BC 18
				Max M_y	-3.47	0.74	-16.05	0.05	▷ 36.66	1.61	BC 21
				Min M_y	-2.89	-0.00	49.93	0.00	▷ -111.21	-0.00	BC 8
				Max M_z	-2.75	2.84	-3.74	0.91	8.55	▷ 6.20	BC 23
				Min M_z	-1.50	-1.16	37.16	-0.33	-82.97	▷ -2.53	BC 6
			0.707	Max N	▷ 0.00	0.00	0.00	0.00	0.00	0.00	
			Rechts	Min N	▷ -4.27	0.41	43.72	-0.02	-97.09	0.88	BC 11
				Max V_y	-2.75	▷ 2.84	-3.74	0.91	8.55	6.20	BC 23
				Min V_y	-1.50	▷ -1.16	37.16	-0.33	-82.97	-2.53	BC 6
				Max V_z	-2.89	-0.00	▷ 49.93	0.00	-111.20	-0.00	BC 8
				Min V_z	-3.47	0.74	▷ -16.05	0.05	36.66	1.61	BC 21
				Max M_T	-2.75	2.84	-3.74	▷ 0.91	8.55	6.20	BC 23
				Min M_T	-0.72	-1.10	17.38	▷ -0.38	-39.08	-2.39	BC 18
				Max M_y	-3.47	0.74	-16.05	0.05	▷ 36.66	1.61	BC 21
				Min M_y	-2.89	-0.00	49.93	0.00	▷ -111.20	-0.00	BC 8
				Max M_z	-2.75	2.84	-3.74	0.91	8.55	▷ 6.20	BC 23
				Min M_z	-1.50	-1.16	37.16	-0.33	-82.97	▷ -2.53	BC 6
			2.581	Max N	▷ 1.35	0.00	34.87	0.00	-23.01	0.00	BC 2
			Links	Min N	▷ -3.04	0.00	11.01	0.00	-7.30	0.00	BC 24

4.12 DOORSNEDES - SNEDEKRACHTEN

Resultaatcombinaties

Staaf No.	RC	Knoop No.	Snede x [m]		Krachten [kN] N	V_y	V_z	Momenten [kNm] M_T	M_y	M_z	Bijbehorend Belastingsgeval
181	RC1			Max V_y	-2.18	▷ 2.22	-3.13	0.90	2.06	1.45	BC 23
				Min V_y	0.92	▷ -0.94	30.25	-0.39	-19.97	-0.61	BC 6
				Max V_z	0.77	-0.00	▷ 40.46	0.00	-26.71	-0.00	BC 8
				Min V_z	-2.89	0.57	▷ -13.50	0.04	8.92	0.37	BC 21
				Max M_T	-2.18	2.22	-3.13	▷ 0.90	2.06	1.45	BC 23
				Min M_T	-0.00	-0.87	14.34	▷ -0.41	-9.46	-0.57	BC 18
				Max M_y	-2.89	0.57	-13.50	0.04	▷ 8.92	0.37	BC 21
				Min M_y	0.77	-0.00	40.46	0.00	▷ -26.71	-0.00	BC 8
				Max M_z	-2.18	2.22	-3.13	0.90	2.06	▷ 1.45	BC 23
				Min M_z	0.92	-0.94	30.25	-0.39	-19.97	▷ -0.61	BC 6
			2.581	Max N	▷ 1.35	0.00	34.87	0.00	-23.01	0.00	BC 2
			Rechts	Min N	▷ -3.04	0.00	11.01	0.00	-7.30	0.00	BC 24
				Max V_y	-2.18	▷ 2.22	-3.13	0.90	2.06	1.45	BC 23
				Min V_y	0.92	▷ -0.94	30.25	-0.39	-19.97	-0.61	BC 6
				Max V_z	0.77	-0.00	▷ 40.46	0.00	-26.71	-0.00	BC 8
				Min V_z	-2.89	0.57	▷ -13.50	0.04	8.92	0.37	BC 21
				Max M_T	-2.18	2.22	-3.13	▷ 0.90	2.06	1.45	BC 23
				Min M_T	-0.00	-0.87	14.34	▷ -0.41	-9.46	-0.57	BC 18
				Max M_y	-2.89	0.57	-13.50	0.04	▷ 8.92	0.37	BC 21
				Min M_y	0.77	-0.00	40.46	0.00	▷ -26.71	-0.00	BC 8
				Max M_z	-2.18	2.22	-3.13	0.90	2.06	▷ 1.45	BC 23
				Min M_z	0.92	-0.94	30.25	-0.39	-19.97	▷ -0.61	BC 6
			2.677	Max N	▷ 1.45	0.00	34.49	0.00	-19.67	0.00	BC 2
			Links	Min N	▷ -3.00	0.00	10.92	0.00	-6.24	0.00	BC 24
				Max V_y	-2.16	▷ 2.18	-3.09	0.90	1.76	1.24	BC 23
				Min V_y	1.02	▷ -0.93	29.92	-0.40	-17.07	-0.52	BC 6
				Max V_z	0.93	-0.00	▷ 40.02	0.00	-22.83	-0.00	BC 8
				Min V_z	-2.86	0.57	▷ -13.36	0.04	7.63	0.32	BC 21
				Max M_T	-2.16	2.18	-3.09	▷ 0.90	1.76	1.24	BC 23
				Min M_T	0.03	-0.86	14.19	▷ -0.41	-8.08	-0.49	BC 18
				Max M_y	-2.86	0.57	-13.36	0.04	▷ 7.63	0.32	BC 21
				Min M_y	0.93	-0.00	40.02	0.00	▷ -22.83	-0.00	BC 8
				Max M_z	-2.16	2.18	-3.09	0.90	1.76	▷ 1.24	BC 23
				Min M_z	1.02	-0.93	29.92	-0.40	-17.07	▷ -0.52	BC 6
			2.677	Max N	▷ 1.45	0.00	34.49	0.00	-19.67	0.00	BC 2
			Rechts	Min N	▷ -3.00	0.00	10.92	0.00	-6.24	0.00	BC 24
				Max V_y	-2.16	▷ 2.18	-3.09	0.90	1.76	1.24	BC 23
				Min V_y	1.02	▷ -0.93	29.92	-0.40	-17.07	-0.52	BC 6
				Max V_z	0.93	-0.00	▷ 40.02	0.00	-22.83	-0.00	BC 8
				Min V_z	-2.86	0.57	▷ -13.36	0.04	7.63	0.32	BC 21
				Max M_T	-2.16	2.18	-3.09	▷ 0.90	1.76	1.24	BC 23
				Min M_T	0.03	-0.86	14.19	▷ -0.41	-8.08	-0.49	BC 18
				Max M_y	-2.86	0.57	-13.36	0.04	▷ 7.63	0.32	BC 21
				Min M_y	0.93	-0.00	40.02	0.00	▷ -22.83	-0.00	BC 8
				Max M_z	-2.16	2.18	-3.09	0.90	1.76	▷ 1.24	BC 23
				Min M_z	1.02	-0.93	29.92	-0.40	-17.07	▷ -0.52	BC 6
			3.201	Max N	▷ 1.79	0.00	33.37	0.00	-1.96	0.00	BC 2
				Min N	▷ -2.85	-0.00	10.56	0.00	-0.62	0.00	BC 24
				Max V_y	-2.06	▷ 2.08	-3.03	0.89	0.17	0.12	BC 23
				Min V_y	1.35	▷ -0.90	28.95	-0.42	-1.70	-0.05	BC 6
				Max V_z	1.41	0.00	▷ 38.74	0.00	-2.27	0.00	BC 8
				Min V_z	-2.76	0.54	▷ -12.99	0.03	0.76	0.03	BC 21
				Max M_T	-2.06	2.08	-3.03	▷ 0.89	0.17	0.12	BC 23
				Min M_T	0.16	-0.83	13.68	▷ -0.42	-0.80	-0.05	BC 18
				Max M_y	-2.76	0.54	-12.99	0.03	▷ 0.76	0.03	BC 21
				Min M_y	1.41	0.00	38.74	0.00	▷ -2.27	0.00	BC 8
				Max M_z	-2.06	2.08	-3.03	0.89	0.17	▷ 0.12	BC 23
				Min M_z	1.35	-0.90	28.95	-0.42	-1.70	▷ -0.05	BC 6
			3.260	Max N	▷ 1.80	0.00	33.34	0.00	-0.00	0.00	BC 2
			Links	Min N	▷ -2.84	0.00	10.54	0.00	-0.00	0.00	BC 24
				Max V_y	-2.05	▷ 2.08	-3.04	0.89	-0.00	0.00	BC 23
				Min V_y	1.36	▷ -0.90	28.92	-0.43	-0.00	0.00	BC 6
				Max V_z	1.42	0.00	▷ 38.72	0.00	-0.00	0.00	BC 8
				Min V_z	-2.75	0.54	▷ -13.00	0.03	0.00	0.00	BC 21
				Max M_T	-2.05	2.08	-3.04	▷ 0.89	-0.00	0.00	BC 23
				Min M_T	1.36	-0.90	28.92	▷ -0.43	-0.00	0.00	BC 6
				Max M_y	-1.04	-0.00	-12.40	-0.00	▷ 0.00	0.00	BC 20
				Min M_y	-2.05	2.08	-3.04	0.89	▷ -0.00	0.00	BC 23
				Max M_z	1.36	-0.90	28.92	-0.43	-0.00	▷ 0.00	BC 6
				Min M_z	0.05	0.59	32.75	0.03	-0.00	▷ -0.00	BC 3
		46	3.260	Max N	▷ 1.80	0.00	33.34	0.00	0.00	0.00	BC 2
			Rechts	Min N	▷ -2.84	0.00	10.54	0.00	0.00	0.00	BC 24
				Max V_y	-2.05	▷ 2.08	-3.04	0.89	-0.00	0.00	BC 23
				Min V_y	1.36	▷ -0.90	28.92	-0.43	-0.00	0.00	BC 6
				Max V_z	1.42	0.00	▷ 38.72	0.00	0.00	0.00	BC 8
				Min V_z	-2.75	0.54	▷ -13.00	0.03	-0.00	0.00	BC 21
				Max M_T	-2.05	2.08	-3.04	▷ 0.89	-0.00	0.00	BC 23
				Min M_T	1.36	-0.90	28.92	▷ -0.43	-0.00	0.00	BC 6
				Max M_y	0.00	0.00	0.00	0.00	▷ 0.00	0.00	
				Min M_y	-2.05	2.08	-3.04	0.89	▷ -0.00	0.00	BC 23
				Max M_z	1.36	-0.90	28.92	-0.43	-0.00	▷ 0.00	BC 6
				Min M_z	0.05	0.59	32.75	0.03	-0.00	▷ -0.00	BC 3
182	RC1	34	0.000	Max N	▷ 14.94	-0.78	-15.88	-0.06	55.46	-2.13	BC 21
			Links	Min N	▷ -23.27	-0.00	51.34	0.00	-144.90	-0.00	BC 8

4.12 DOORSNEDES - SNEDEKRACHTEN

Resultaatcombinaties

Staaf No.	RC	Knoop No.	Snede x [m]		Krachten [kN] N		V_y		V_z	Momenten [kNm] M_T		M_y		M_z	Bijbehorend Belastingsgeval
182	RC1			Max V_y	-21.37	▷	1.20		40.83	0.28		-116.66		3.41	BC 6
				Min V_y	-1.72	▷	-2.99		-3.38	-0.91		10.44		-8.36	BC 23
				Max V_z	-23.27		-0.00	▷	51.34	0.00		-144.90		-0.00	BC 8
				Min V_z	14.94		-0.78	▷	-15.88	-0.06		55.46		-2.13	BC 21
				Max M_T	-7.79		0.34		16.58	▷	0.36	-46.27		0.96	BC 19
				Min M_T	-1.72		-2.99		-3.38	▷	-0.91	10.44		-8.36	BC 23
				Max M_y	14.94		-0.78		-15.88	-0.06	▷	55.46		-2.13	BC 21
				Min M_y	-23.27		-0.00		51.34	0.00	▷	-144.90		-0.00	BC 8
				Max M_z	-21.37		1.20		40.83	0.28		-116.66	▷	3.41	BC 6
				Min M_z	-1.72		-2.99		-3.38	-0.91		10.44	▷	-8.36	BC 23
			0.000	Max N	▷ 14.94		-0.78		-15.88	-0.06		55.46		-2.13	BC 21
			Rechts	Min N	▷ -23.27		-0.00		51.34	0.00		-144.90		-0.00	BC 8
				Max V_y	-21.37	▷	1.20		40.83	0.28		-116.66		3.41	BC 6
				Min V_y	-1.72	▷	-2.99		-3.38	-0.91		10.44		-8.36	BC 23
				Max V_z	-23.27		-0.00	▷	51.34	0.00		-144.90		-0.00	BC 8
				Min V_z	14.94		-0.78	▷	-15.88	-0.06		55.46		-2.13	BC 21
				Max M_T	-7.79		0.34		16.58	▷	0.36	-46.27		0.96	BC 19
				Min M_T	-1.72		-2.99		-3.38	▷	-0.91	10.44		-8.36	BC 23
				Max M_y	14.94		-0.78		-15.88	-0.06	▷	55.46		-2.13	BC 21
				Min M_y	-23.27		-0.00		51.34	0.00	▷	-144.90		-0.00	BC 8
				Max M_z	-21.37		1.20		40.83	0.28		-116.66	▷	3.41	BC 6
				Min M_z	-1.72		-2.99		-3.38	-0.91		10.44	▷	-8.36	BC 23
			0.679	Max N	▷ 15.14		-0.74		-16.35	-0.06		44.53		-1.61	BC 21
			Links	Min N	▷ -22.33		-0.00		49.18	0.00		-110.60		-0.00	BC 8
				Max V_y	-20.66	▷	1.18		39.20	0.29		-89.37		2.62	BC 6
				Min V_y	-1.51	▷	-2.88		-3.52	-0.91		8.07		-6.35	BC 23
				Max V_z	-22.33		-0.00	▷	49.18	0.00		-110.60		-0.00	BC 8
				Min V_z	15.14		-0.74	▷	-16.35	-0.06		44.53		-1.61	BC 21
				Max M_T	-7.48		0.33		15.71	▷	0.37	-35.27		0.74	BC 19
				Min M_T	-1.51		-2.88		-3.52	▷	-0.91	8.07		-6.35	BC 23
				Max M_y	15.14		-0.74		-16.35	-0.06	▷	44.53		-1.61	BC 21
				Min M_y	-22.33		-0.00		49.18	0.00	▷	-110.60		-0.00	BC 8
				Max M_z	-20.66		1.18		39.20	0.29		-89.37	▷	2.62	BC 6
				Min M_z	-1.51		-2.88		-3.52	-0.91		8.07	▷	-6.35	BC 23
			0.679	Max N	▷ 15.14		-0.74		-16.35	-0.06		44.53		-1.61	BC 21
			Rechts	Min N	▷ -22.33		-0.00		49.18	0.00		-110.60		-0.00	BC 8
				Max V_y	-20.66	▷	1.18		39.20	0.29		-89.37		2.62	BC 6
				Min V_y	-1.51	▷	-2.88		-3.52	-0.91		8.07		-6.35	BC 23
				Max V_z	-22.33		-0.00	▷	49.18	0.00		-110.60		-0.00	BC 8
				Min V_z	15.14		-0.74	▷	-16.35	-0.06		44.53		-1.61	BC 21
				Max M_T	-7.48		0.33		15.71	▷	0.37	-35.27		0.74	BC 19
				Min M_T	-1.51		-2.88		-3.52	▷	-0.91	8.07		-6.35	BC 23
				Max M_y	15.14		-0.74		-16.35	-0.06	▷	44.53		-1.61	BC 21
				Min M_y	-22.33		-0.00		49.18	0.00	▷	-110.60		-0.00	BC 8
				Max M_z	-20.66		1.18		39.20	0.29		-89.37	▷	2.62	BC 6
				Min M_z	-1.51		-2.88		-3.52	-0.91		8.07	▷	-6.35	BC 23
			0.707	Max N	▷ 15.15		-0.74		-16.37	-0.06		44.06		-1.59	BC 21
			Links	Min N	▷ -22.26		-0.00		49.03	0.00		-109.21		-0.00	BC 8
				Max V_y	-20.62	▷	1.17		39.09	0.29		-88.26		2.59	BC 6
				Min V_y	-1.50	▷	-2.87		-3.51	-0.91		7.97		-6.27	BC 23
				Max V_z	-22.26		-0.00	▷	49.03	0.00		-109.21		-0.00	BC 8
				Min V_z	15.15		-0.74	▷	-16.37	-0.06		44.06		-1.59	BC 21
				Max M_T	-7.46		0.33		15.66	▷	0.37	-34.83		0.73	BC 19
				Min M_T	-1.50		-2.87		-3.51	▷	-0.91	7.97		-6.27	BC 23
				Max M_y	15.15		-0.74		-16.37	-0.06	▷	44.06		-1.59	BC 21
				Min M_y	-22.26		-0.00		49.03	0.00	▷	-109.21		-0.00	BC 8
				Max M_z	-20.62		1.17		39.09	0.29		-88.26	▷	2.59	BC 6
				Min M_z	-1.50		-2.87		-3.51	-0.91		7.97	▷	-6.27	BC 23
			0.707	Max N	▷ 15.15		-0.74		-16.37	-0.06		44.06		-1.59	BC 21
			Rechts	Min N	▷ -22.26		-0.00		49.03	0.00		-109.21		-0.00	BC 8
				Max V_y	-20.62	▷	1.17		39.09	0.29		-88.26		2.59	BC 6
				Min V_y	-1.50	▷	-2.87		-3.51	-0.91		7.97		-6.27	BC 23
				Max V_z	-22.26		-0.00	▷	49.03	0.00		-109.21		-0.00	BC 8
				Min V_z	15.15		-0.74	▷	-16.37	-0.06		44.06		-1.59	BC 21
				Max M_T	-7.46		0.33		15.66	▷	0.37	-34.83		0.73	BC 19
				Min M_T	-1.50		-2.87		-3.51	▷	-0.91	7.97		-6.27	BC 23
				Max M_y	15.15		-0.74		-16.37	-0.06	▷	44.06		-1.59	BC 21
				Min M_y	-22.26		-0.00		49.03	0.00	▷	-109.21		-0.00	BC 8
				Max M_z	-20.62		1.17		39.09	0.29		-88.26	▷	2.59	BC 6
				Min M_z	-1.50		-2.87		-3.51	-0.91		7.97	▷	-6.27	BC 23
			2.581	Max N	▷ 15.75		-0.56		-17.68	-0.04		12.12		-0.37	BC 21
			Links	Min N	▷ -19.12		-0.00		36.67	0.00		-24.27		-0.00	BC 2
				Max V_y	-17.86	▷	0.97		32.37	0.38		-21.44		0.63	BC 6
				Min V_y	-0.93	▷	-2.24		-2.90	-0.89		1.91		-1.47	BC 23
				Max V_z	-18.43		-0.00	▷	39.72	0.00		-26.23		-0.00	BC 8
				Min V_z	15.75		-0.56	▷	-17.68	-0.04		12.12		-0.37	BC 21
				Max M_T	-12.38		0.90		17.56	▷	0.40	-11.67		0.59	BC 18
				Min M_T	-0.93		-2.24		-2.90	▷	-0.89	1.91		-1.47	BC 23
				Max M_y	15.75		-0.56		-17.68	-0.04	▷	12.12		-0.37	BC 21
				Min M_y	-18.43		-0.00		39.72	0.00	▷	-26.23		-0.00	BC 8
				Max M_z	-17.86		0.97		32.37	0.38		-21.44	▷	0.63	BC 6
				Min M_z	-0.93		-2.24		-2.90	-0.89		1.91	▷	-1.47	BC 23
			2.581	Max N	▷ 15.75		-0.56		-17.68	-0.04		12.12		-0.37	BC 21
			Rechts	Min N	▷ -19.12		-0.00		36.67	0.00		-24.26		-0.00	BC 2

4.12 DOORSNEDES - SNEDEKRACHTEN

Resultaatcombinaties

Staaf No.	RC	Knoop No.	Snede x [m]		Krachten [kN] N	V_y	V_z	Momenten [kNm] M_T	M_y	M_z	Bijbehorend Belastingsgeval
182	RC1			Max V_y	-17.86	▷ 0.97	32.37	0.38	-21.44	0.63	BC 6
				Min V_y	-0.93	▷ -2.24	-2.90	-0.89	1.91	-1.47	BC 23
				Max V_z	-18.43	-0.00	▷ 39.72	0.00	-26.23	-0.00	BC 8
				Min V_z	15.75	-0.56	▷ -17.68	-0.04	12.12	-0.37	BC 21
				Max M_T	-12.38	0.90	17.56	▷ 0.40	-11.67	0.59	BC 18
				Min M_T	-0.93	-2.24	-2.90	▷ -0.89	1.91	-1.47	BC 23
				Max M_y	15.75	-0.56	-17.68	-0.04	▷ 12.12	-0.37	BC 21
				Min M_y	-18.43	-0.00	39.72	0.00	▷ -26.23	-0.00	BC 8
				Max M_z	-17.86	0.97	32.37	0.38	-21.44	▷ 0.63	BC 6
				Min M_z	-0.93	-2.24	-2.90	-0.89	1.91	▷ -1.47	BC 23
			2.677	Max N	▷ 15.78	-0.55	-17.74	-0.04	10.41	-0.31	BC 21
			Links	Min N	▷ -19.00	-0.00	36.30	0.00	-20.75	-0.00	BC 2
				Max V_y	-17.73	▷ 0.96	32.06	0.39	-18.33	0.54	BC 6
				Min V_y	-0.91	▷ -2.21	-2.86	-0.89	1.63	-1.25	BC 23
				Max V_z	-18.26	-0.00	▷ 39.28	0.00	-22.42	-0.00	BC 8
				Min V_z	15.78	-0.55	▷ -17.74	-0.04	10.41	-0.31	BC 21
				Max M_T	-12.34	0.89	17.42	▷ 0.40	-9.98	0.50	BC 18
				Min M_T	-0.91	-2.21	-2.86	▷ -0.89	1.63	-1.25	BC 23
				Max M_y	15.78	-0.55	-17.74	-0.04	▷ 10.41	-0.31	BC 21
				Min M_y	-18.26	-0.00	39.28	0.00	▷ -22.42	-0.00	BC 8
				Max M_z	-17.73	0.96	32.06	0.39	-18.33	▷ 0.54	BC 6
				Min M_z	-0.91	-2.21	-2.86	-0.89	1.63	▷ -1.25	BC 23
			2.677	Max N	▷ 15.78	-0.55	-17.74	-0.04	10.41	-0.31	BC 21
			Rechts	Min N	▷ -19.00	-0.00	36.30	0.00	-20.74	-0.00	BC 2
				Max V_y	-17.73	▷ 0.96	32.06	0.39	-18.33	0.54	BC 6
				Min V_y	-0.91	▷ -2.21	-2.86	-0.89	1.63	-1.25	BC 23
				Max V_z	-18.26	-0.00	▷ 39.28	0.00	-22.42	-0.00	BC 8
				Min V_z	15.78	-0.55	▷ -17.74	-0.04	10.41	-0.31	BC 21
				Max M_T	-12.34	0.89	17.42	▷ 0.40	-9.98	0.50	BC 18
				Min M_T	-0.91	-2.21	-2.86	▷ -0.89	1.63	-1.25	BC 23
				Max M_y	15.78	-0.55	-17.74	-0.04	▷ 10.41	-0.31	BC 21
				Min M_y	-18.26	-0.00	39.28	0.00	▷ -22.42	-0.00	BC 8
				Max M_z	-17.73	0.96	32.06	0.39	-18.33	▷ 0.54	BC 6
				Min M_z	-0.91	-2.21	-2.86	-0.89	1.63	▷ -1.25	BC 23
			3.201	Max N	▷ 15.89	-0.53	-17.97	-0.03	1.05	-0.03	BC 21
				Min N	▷ -18.61	0.00	35.21	0.00	-2.07	0.00	BC 2
				Max V_y	-17.35	▷ 0.93	31.12	0.42	-1.83	0.05	BC 6
				Min V_y	-0.81	▷ -2.11	-2.80	-0.88	0.16	-0.12	BC 23
				Max V_z	-17.76	-0.00	▷ 38.03	0.00	-2.23	-0.00	BC 8
				Min V_z	15.89	-0.53	▷ -17.97	-0.03	1.05	-0.03	BC 21
				Max M_T	-17.35	0.93	31.12	▷ 0.42	-1.83	0.05	BC 6
				Min M_T	-0.81	-2.11	-2.80	▷ -0.88	0.16	-0.12	BC 23
				Max M_y	15.89	-0.53	-17.97	-0.03	▷ 1.05	-0.03	BC 21
				Min M_y	-17.76	-0.00	38.03	0.00	▷ -2.23	-0.00	BC 8
				Max M_z	-17.35	0.93	31.12	0.42	-1.83	▷ 0.05	BC 6
				Min M_z	-0.81	-2.11	-2.80	-0.88	0.16	▷ -0.12	BC 23
			3.260	Max N	▷ 15.89	-0.53	-17.99	-0.03	0.00	-0.00	BC 21
			Links	Min N	▷ -18.60	-0.00	35.19	0.00	-0.00	0.00	BC 2
				Max V_y	-17.34	▷ 0.93	31.09	0.43	-0.00	-0.00	BC 6
				Min V_y	-0.80	▷ -2.11	-2.81	-0.88	-0.00	-0.00	BC 23
				Max V_z	-17.75	0.00	▷ 38.01	0.00	-0.00	0.00	BC 8
				Min V_z	15.89	-0.53	▷ -17.99	-0.03	0.00	-0.00	BC 21
				Max M_T	-17.34	0.93	31.09	▷ 0.43	-0.00	-0.00	BC 6
				Min M_T	-0.80	-2.11	-2.81	▷ -0.88	-0.00	-0.00	BC 23
				Max M_y	15.89	-0.53	-17.99	-0.03	▷ 0.00	-0.00	BC 21
				Min M_y	-0.80	-2.11	-2.81	-0.88	▷ -0.00	-0.00	BC 23
				Max M_z	-12.86	-0.59	30.27	-0.03	-0.00	▷ 0.00	BC 3
				Min M_z	-17.34	0.93	31.09	0.43	-0.00	▷ -0.00	BC 6
		39	3.260	Max N	▷ 15.89	-0.53	-17.99	-0.03	-0.00	-0.00	BC 21
			Rechts	Min N	▷ -18.60	-0.00	35.19	0.00	0.00	0.00	BC 2
				Max V_y	-17.34	▷ 0.93	31.09	0.43	-0.00	-0.00	BC 6
				Min V_y	-0.80	▷ -2.11	-2.81	-0.88	-0.00	-0.00	BC 23
				Max V_z	-17.75	0.00	▷ 38.01	0.00	0.00	0.00	BC 8
				Min V_z	15.89	-0.53	▷ -17.99	-0.03	-0.00	-0.00	BC 21
				Max M_T	-17.34	0.93	31.09	▷ 0.43	-0.00	-0.00	BC 6
				Min M_T	-0.80	-2.11	-2.81	▷ -0.88	-0.00	-0.00	BC 23
				Max M_y	0.00	0.00	0.00	0.00	▷ 0.00	0.00	
				Min M_y	-0.80	-2.11	-2.81	-0.88	▷ -0.00	-0.00	BC 23
				Max M_z	-12.86	-0.59	30.27	-0.03	-0.00	▷ 0.00	BC 3
				Min M_z	-17.34	0.93	31.09	0.43	-0.00	▷ -0.00	BC 6
183	RC1	44	0.000	Max N	▷ 6.31	-0.00	-19.48	0.00	58.67	-0.00	BC 14
			Links	Min N	▷ -23.78	0.42	49.30	-0.02	-140.35	1.18	BC 11
				Max V_y	-1.72	▷ 2.99	-3.38	0.91	10.43	8.36	BC 23
				Min V_y	-9.91	▷ -1.19	30.79	-0.33	-83.49	-3.34	BC 6
				Max V_z	-23.78	0.42	▷ 49.30	-0.02	-140.35	1.18	BC 11
				Min V_z	6.31	-0.00	▷ -19.48	0.00	58.67	-0.00	BC 14
				Max M_T	3.67	2.19	-8.60	▷ 0.92	27.59	6.11	BC 22
				Min M_T	-2.36	-1.13	11.34	▷ -0.39	-29.00	-3.17	BC 18
				Max M_y	6.31	-0.00	-19.48	0.00	▷ 58.67	-0.00	BC 14
				Min M_y	-23.78	0.42	49.30	-0.02	▷ -140.35	1.18	BC 11
				Max M_z	-1.72	2.99	-3.38	0.91	10.43	▷ 8.36	BC 23
				Min M_z	-9.91	-1.19	30.79	-0.33	-83.49	▷ -3.34	BC 6
			0.000	Max N	▷ 6.31	-0.00	-19.48	0.00	58.67	-0.00	BC 14
			Rechts	Min N	▷ -23.78	0.42	49.30	-0.02	-140.35	1.18	BC 11

4.12 DOORSNEDES - SNEDEKRACHTEN

Resultaatcombinaties

Staaf No.	RC	Knoop No.	Snede x [m]		Krachten [kN] N	V_y	V_z	Momenten [kNm] M_T	M_y	M_z	Bijbehorend Belastingsgeval
183	RC1			Max V_y	-1.72	▷ 2.99	-3.38	0.91	10.43	8.36	BC 23
				Min V_y	-9.91	▷ -1.19	30.79	-0.33	-83.49	-3.34	BC 6
				Max V_z	-23.78	0.42	▷ 49.30	-0.02	-140.35	1.18	BC 11
				Min V_z	6.31	-0.00	▷ -19.48	0.00	58.67	-0.00	BC 14
				Max M_T	3.67	2.19	-8.60	▷ 0.92	27.59	6.11	BC 22
				Min M_T	-2.36	-1.13	11.34	▷ -0.39	-29.00	-3.17	BC 18
				Max M_y	6.31	-0.00	-19.48	0.00	▷ 58.67	-0.00	BC 14
				Min M_y	-23.78	0.42	49.30	-0.02	▷ -140.35	1.18	BC 11
				Max M_z	-1.72	2.99	-3.38	0.91	10.43	▷ 8.36	BC 23
				Min M_z	-9.91	-1.19	30.79	-0.33	-83.49	▷ -3.34	BC 6
			0.598	Max N	▷ 6.47	-0.00	-19.37	0.00	47.00	-0.00	BC 14
				Min N	▷ -23.13	0.81	41.01	-0.04	-98.29	1.85	BC 5
				Max V_y	-1.54	▷ 2.91	-3.53	0.91	8.34	6.58	BC 23
				Min V_y	-9.38	▷ -1.16	29.42	-0.33	-65.40	-2.64	BC 6
				Max V_z	-23.02	0.41	▷ 47.67	-0.02	-111.24	0.93	BC 11
				Min V_z	6.47	-0.00	▷ -19.37	0.00	47.00	-0.00	BC 14
				Max M_T	3.82	2.12	-8.76	▷ 0.92	22.38	4.80	BC 22
				Min M_T	-2.12	-1.10	10.58	▷ -0.39	-22.42	-2.51	BC 18
				Max M_y	6.47	-0.00	-19.37	0.00	▷ 47.00	-0.00	BC 14
				Min M_y	-23.02	0.41	47.67	-0.02	▷ -111.24	0.93	BC 11
				Max M_z	-1.54	2.91	-3.53	0.91	8.34	▷ 6.58	BC 23
				Min M_z	-9.38	-1.16	29.42	-0.33	-65.40	▷ -2.64	BC 6
			0.679	Max N	▷ 6.49	-0.00	-19.28	0.00	45.44	-0.00	BC 14
			Links	Min N	▷ -23.01	0.81	40.75	-0.04	-94.99	1.79	BC 5
				Max V_y	-1.52	▷ 2.88	-3.52	0.91	8.06	6.35	BC 23
				Min V_y	-9.27	▷ -1.15	29.12	-0.33	-63.04	-2.55	BC 6
				Max V_z	-22.86	0.41	▷ 47.31	-0.02	-107.40	0.90	BC 11
				Min V_z	6.49	-0.00	▷ -19.28	0.00	45.44	-0.00	BC 14
				Max M_T	3.84	2.10	-8.75	▷ 0.92	21.67	4.63	BC 22
				Min M_T	-2.08	-1.10	10.45	▷ -0.39	-21.57	-2.42	BC 18
				Max M_y	6.49	-0.00	-19.28	0.00	▷ 45.44	-0.00	BC 14
				Min M_y	-22.86	0.41	47.31	-0.02	▷ -107.40	0.90	BC 11
				Max M_z	-1.52	2.88	-3.52	0.91	8.06	▷ 6.35	BC 23
				Min M_z	-9.27	-1.15	29.12	-0.33	-63.04	▷ -2.55	BC 6
			0.679	Max N	▷ 6.49	-0.00	-19.28	0.00	45.44	-0.00	BC 14
			Rechts	Min N	▷ -23.01	0.81	40.75	-0.04	-94.99	1.79	BC 5
				Max V_y	-1.52	▷ 2.88	-3.52	0.91	8.06	6.35	BC 23
				Min V_y	-9.27	▷ -1.15	29.12	-0.33	-63.04	-2.55	BC 6
				Max V_z	-22.86	0.41	▷ 47.31	-0.02	-107.40	0.90	BC 11
				Min V_z	6.49	-0.00	▷ -19.28	0.00	45.44	-0.00	BC 14
				Max M_T	3.85	2.10	-8.75	▷ 0.92	21.67	4.63	BC 22
				Min M_T	-2.08	-1.10	10.45	▷ -0.39	-21.57	-2.42	BC 18
				Max M_y	6.49	-0.00	-19.28	0.00	▷ 45.44	-0.00	BC 14
				Min M_y	-22.86	0.41	47.31	-0.02	▷ -107.40	0.90	BC 11
				Max M_z	-1.52	2.88	-3.52	0.91	8.06	▷ 6.35	BC 23
				Min M_z	-9.27	-1.15	29.12	-0.33	-63.04	▷ -2.55	BC 6
			0.707	Max N	▷ 6.50	-0.00	-19.25	0.00	44.90	-0.00	BC 14
			Links	Min N	▷ -22.97	0.80	40.66	-0.04	-93.84	1.76	BC 5
				Max V_y	-1.51	▷ 2.87	-3.51	0.91	7.96	6.26	BC 23
				Min V_y	-9.23	▷ -1.15	29.01	-0.33	-62.22	-2.52	BC 6
				Max V_z	-22.80	0.41	▷ 47.17	-0.02	-106.07	0.89	BC 11
				Min V_z	6.50	-0.00	▷ -19.25	0.00	44.90	-0.00	BC 14
				Max M_T	3.85	2.10	-8.75	▷ 0.92	21.43	4.57	BC 22
				Min M_T	-2.07	-1.09	10.40	▷ -0.39	-21.28	-2.39	BC 18
				Max M_y	6.50	-0.00	-19.25	0.00	▷ 44.90	-0.00	BC 14
				Min M_y	-22.80	0.41	47.17	-0.02	▷ -106.07	0.89	BC 11
				Max M_z	-1.51	2.87	-3.51	0.91	7.96	▷ 6.26	BC 23
				Min M_z	-9.23	-1.15	29.01	-0.33	-62.22	▷ -2.52	BC 6
			0.707	Max N	▷ 6.50	-0.00	-19.25	0.00	44.90	-0.00	BC 14
			Rechts	Min N	▷ -22.97	0.80	40.66	-0.04	-93.84	1.76	BC 5
				Max V_y	-1.51	▷ 2.87	-3.51	0.91	7.96	6.26	BC 23
				Min V_y	-9.23	▷ -1.15	29.01	-0.33	-62.22	-2.52	BC 6
				Max V_z	-22.80	0.41	▷ 47.17	-0.02	-106.06	0.89	BC 11
				Min V_z	6.50	-0.00	▷ -19.25	0.00	44.90	-0.00	BC 14
				Max M_T	3.85	2.10	-8.75	▷ 0.92	21.43	4.57	BC 22
				Min M_T	-2.07	-1.09	10.40	▷ -0.39	-21.28	-2.39	BC 18
				Max M_y	6.50	-0.00	-19.25	0.00	▷ 44.90	-0.00	BC 14
				Min M_y	-22.80	0.41	47.17	-0.02	▷ -106.06	0.89	BC 11
				Max M_z	-1.51	2.87	-3.51	0.91	7.96	▷ 6.26	BC 23
				Min M_z	-9.23	-1.15	29.01	-0.33	-62.22	▷ -2.52	BC 6
			1.250	Max N	▷ 6.65	0.00	-18.56	0.00	34.63	0.00	BC 14
				Min N	▷ -22.17	0.76	38.89	-0.03	-72.24	1.34	BC 5
				Max V_y	-1.32	▷ 2.69	-3.37	0.91	6.09	4.75	BC 23
				Min V_y	-8.50	▷ -1.09	26.92	-0.35	-47.03	-1.93	BC 6
				Max V_z	-21.66	0.38	▷ 44.63	-0.02	-81.14	0.68	BC 11
				Min V_z	6.65	0.00	▷ -18.56	0.00	34.63	0.00	BC 14
				Max M_T	3.99	1.96	-8.63	▷ 0.91	16.71	3.46	BC 22
				Min M_T	-1.84	-1.03	9.46	▷ -0.40	-15.89	-1.82	BC 18
				Max M_y	6.65	0.00	-18.56	0.00	▷ 34.63	0.00	BC 14
				Min M_y	-21.66	0.38	44.63	-0.02	▷ -81.14	0.68	BC 11
				Max M_z	-1.32	2.69	-3.37	0.91	6.09	▷ 4.75	BC 23
				Min M_z	-8.50	-1.09	26.92	-0.35	-47.03	▷ -1.93	BC 6
			1.902	Max N	▷ 6.80	-0.00	-17.70	0.00	22.81	-0.00	BC 14
				Min N	▷ -21.25	0.70	36.86	-0.02	-47.54	0.87	BC 5

4.12 DOORSNEDES - SNEDEKRACHTEN

Resultaatcombinaties

Staaf No.	RC	Knoop No.	Snede x [m]		Krachten [kN] N	V_y	V_z	Momenten [kNm] M_T	M_y	M_z	Bijbehorend Belastingsgeval
183	RC1			Max V_y	-1.12	▷ 2.47	-3.17	0.90	3.96	3.07	BC 23
				Min V_y	-7.66	▷ -1.01	24.51	-0.37	-30.26	-1.25	BC 6
				Max V_z	-20.35	0.35	▷ 41.70	-0.01	-52.99	0.44	BC 11
				Min V_z	6.80	-0.00	▷ -17.70	0.00	22.81	-0.00	BC 14
				Max M_T	-1.12	2.47	-3.17	▷ 0.90	3.96	3.07	BC 23
				Min M_T	-1.59	-0.95	8.39	▷ -0.40	-10.07	-1.18	BC 18
				Max M_y	6.80	-0.00	-17.70	0.00	▷ 22.81	-0.00	BC 14
				Min M_y	-20.35	0.35	41.70	-0.01	▷ -52.99	0.44	BC 11
				Max M_z	-1.12	2.47	-3.17	0.90	3.96	▷ 3.07	BC 23
				Min M_z	-7.66	-1.01	24.51	-0.37	-30.26	▷ -1.25	BC 6
			2.554	Max N	▷ 6.94	0.00	-16.78	0.00	11.57	0.00	BC 14
				Min N	▷ -20.39	0.64	34.93	0.00	-24.13	0.43	BC 5
				Max V_y	-0.94	▷ 2.25	-2.91	0.89	1.98	1.52	BC 23
				Min V_y	-6.88	▷ -0.93	22.20	-0.40	-15.04	-0.63	BC 6
				Max V_z	-19.11	0.32	▷ 38.90	0.00	-26.71	0.22	BC 11
				Min V_z	6.94	0.00	▷ -16.78	0.00	11.57	0.00	BC 14
				Max M_T	-0.94	2.25	-2.91	▷ 0.89	1.98	1.52	BC 23
				Min M_T	-1.38	-0.87	7.40	▷ -0.41	-4.92	-0.59	BC 18
				Max M_y	6.94	0.00	-16.78	0.00	▷ 11.57	0.00	BC 14
				Min M_y	-19.11	0.32	38.90	0.00	▷ -26.71	0.22	BC 11
				Max M_z	-0.94	2.25	-2.91	0.89	1.98	▷ 1.52	BC 23
				Min M_z	-6.88	-0.93	22.20	-0.40	-15.04	▷ -0.63	BC 6
			2.581	Max N	▷ 6.94	0.00	-16.74	0.00	11.13	0.00	BC 14
			Links	Min N	▷ -20.35	0.64	34.85	0.00	-23.21	0.42	BC 5
				Max V_y	-0.93	▷ 2.24	-2.90	0.89	1.90	1.47	BC 23
				Min V_y	-6.85	▷ -0.93	22.11	-0.40	-14.45	-0.61	BC 6
				Max V_z	-19.06	0.32	▷ 38.79	0.00	-25.69	0.21	BC 11
				Min V_z	6.94	0.00	▷ -16.74	0.00	11.13	0.00	BC 14
				Max M_T	-0.93	2.24	-2.90	▷ 0.89	1.90	1.47	BC 23
				Min M_T	-1.37	-0.86	7.36	▷ -0.41	-4.73	-0.56	BC 18
				Max M_y	6.94	0.00	-16.74	0.00	▷ 11.13	0.00	BC 14
				Min M_y	-19.06	0.32	38.79	0.00	▷ -25.69	0.21	BC 11
				Max M_z	-0.93	2.24	-2.90	0.89	1.90	▷ 1.47	BC 23
				Min M_z	-6.85	-0.93	22.11	-0.40	-14.45	▷ -0.61	BC 6
			2.581	Max N	▷ 6.94	0.00	-16.74	0.00	11.13	0.00	BC 14
			Rechts	Min N	▷ -20.35	0.64	34.85	0.00	-23.21	0.42	BC 5
				Max V_y	-0.93	▷ 2.24	-2.90	0.89	1.90	1.47	BC 23
				Min V_y	-6.85	▷ -0.93	22.11	-0.40	-14.45	-0.61	BC 6
				Max V_z	-19.06	0.32	▷ 38.79	0.00	-25.69	0.21	BC 11
				Min V_z	6.94	0.00	▷ -16.74	0.00	11.13	0.00	BC 14
				Max M_T	-0.93	2.24	-2.90	▷ 0.89	1.90	1.47	BC 23
				Min M_T	-1.37	-0.86	7.36	▷ -0.41	-4.73	-0.56	BC 18
				Max M_y	6.94	0.00	-16.74	0.00	▷ 11.13	0.00	BC 14
				Min M_y	-19.06	0.32	38.79	0.00	▷ -25.69	0.21	BC 11
				Max M_z	-0.93	2.24	-2.90	0.89	1.90	▷ 1.47	BC 23
				Min M_z	-6.85	-0.93	22.11	-0.40	-14.45	▷ -0.61	BC 6
			2.677	Max N	▷ 6.96	0.00	-16.60	0.00	9.52	0.00	BC 14
			Links	Min N	▷ -20.24	0.63	34.60	0.01	-19.86	0.36	BC 5
				Max V_y	-0.91	▷ 2.21	-2.86	0.89	1.63	1.25	BC 23
				Min V_y	-6.74	▷ -0.92	21.80	-0.40	-12.33	-0.52	BC 6
				Max V_z	-18.89	0.32	▷ 38.41	0.00	-21.96	0.18	BC 11
				Min V_z	6.96	0.00	▷ -16.60	0.00	9.52	0.00	BC 14
				Max M_T	-0.91	2.21	-2.86	▷ 0.89	1.63	1.25	BC 23
				Min M_T	-1.34	-0.85	7.22	▷ -0.42	-4.02	-0.48	BC 18
				Max M_y	6.96	0.00	-16.60	0.00	▷ 9.52	0.00	BC 14
				Min M_y	-18.89	0.32	38.41	0.00	▷ -21.96	0.18	BC 11
				Max M_z	-0.91	2.21	-2.86	0.89	1.63	▷ 1.25	BC 23
				Min M_z	-6.74	-0.92	21.80	-0.40	-12.33	▷ -0.52	BC 6
			2.677	Max N	▷ 6.96	0.00	-16.60	0.00	9.52	0.00	BC 14
			Rechts	Min N	▷ -20.24	0.63	34.60	0.01	-19.86	0.36	BC 5
				Max V_y	-0.91	▷ 2.21	-2.86	0.89	1.63	1.25	BC 23
				Min V_y	-6.74	▷ -0.92	21.80	-0.40	-12.33	-0.52	BC 6
				Max V_z	-18.89	0.32	▷ 38.41	0.00	-21.96	0.18	BC 11
				Min V_z	6.96	0.00	▷ -16.60	0.00	9.52	0.00	BC 14
				Max M_T	-0.91	2.21	-2.86	▷ 0.89	1.63	1.25	BC 23
				Min M_T	-1.34	-0.85	7.22	▷ -0.42	-4.02	-0.48	BC 18
				Max M_y	6.96	0.00	-16.60	0.00	▷ 9.52	0.00	BC 14
				Min M_y	-18.89	0.32	38.41	0.00	▷ -21.96	0.18	BC 11
				Max M_z	-0.91	2.21	-2.86	0.89	1.63	▷ 1.25	BC 23
				Min M_z	-6.74	-0.92	21.80	-0.40	-12.33	▷ -0.52	BC 6
			3.201	Max N	▷ 7.04	0.00	-16.25	0.00	0.95	0.00	BC 14
				Min N	▷ -19.87	0.60	33.79	0.03	-1.98	0.04	BC 5
				Max V_y	-0.81	▷ 2.11	-2.80	0.88	0.16	0.12	BC 23
				Min V_y	-6.41	▷ -0.89	20.82	-0.42	-1.22	-0.05	BC 6
				Max V_z	-18.39	0.30	▷ 37.30	0.01	-2.19	0.02	BC 11
				Min V_z	7.04	0.00	▷ -16.25	0.00	0.95	0.00	BC 14
				Max M_T	-0.81	2.11	-2.80	▷ 0.88	0.16	0.12	BC 23
				Min M_T	-6.41	-0.89	20.82	▷ -0.42	-1.22	-0.05	BC 6
				Max M_y	7.04	0.00	-16.25	0.00	▷ 0.95	0.00	BC 14
				Min M_y	-18.39	0.30	37.30	0.01	▷ -2.19	0.02	BC 11
				Max M_z	-0.81	2.11	-2.80	0.88	0.16	▷ 0.12	BC 23
				Min M_z	-6.41	-0.89	20.82	-0.42	-1.22	▷ -0.05	BC 6
			3.260	Max N	▷ 7.05	0.00	-16.26	0.00	0.00	0.00	BC 14
			Links	Min N	▷ -19.86	0.60	33.76	0.03	-0.00	-0.00	BC 5

4.12 DOORSNEDES - SNEDEKRACHTEN

Resultaatcombinaties

Staaf No.	RC	Knoop No.	Snede x [m]		Krachten [kN] N	V_y	V_z	Momenten [kNm] M_T	M_y	M_z	Bijbehorend Belastingsgeval
183	RC1			Max V_y	-0.80	▷ 2.11	-2.81	0.88	-0.00	0.00	BC 23
				Min V_y	-6.40	▷ -0.89	20.80	-0.43	-0.00	0.00	BC 6
				Max V_z	-18.38	0.30	▷ 37.27	0.01	-0.00	-0.00	BC 11
				Min V_z	7.05	0.00	▷ -16.26	0.00	0.00	0.00	BC 14
				Max M_T	-0.80	2.11	-2.81	▷ 0.88	-0.00	0.00	BC 23
				Min M_T	-6.40	-0.89	20.80	▷ -0.43	-0.00	0.00	BC 6
				Max M_y	7.05	0.00	-16.26	0.00	▷ 0.00	0.00	BC 14
				Min M_y	-0.80	2.11	-2.81	0.88	▷ -0.00	0.00	BC 23
				Max M_z	-11.59	-0.32	26.15	-0.40	-0.00	▷ 0.00	BC 7
				Min M_z	-12.84	0.59	30.23	0.03	-0.00	▷ -0.00	BC 3
		12	3.260	Max N	▷ 7.05	0.00	-16.26	0.00	0.00	0.00	BC 14
			Rechts	Min N	▷ -19.86	0.60	33.76	0.03	-0.00	-0.00	BC 5
				Max V_y	-0.80	▷ 2.11	-2.81	0.88	-0.00	0.00	BC 23
				Min V_y	-6.40	▷ -0.89	20.80	-0.43	-0.00	0.00	BC 6
				Max V_z	-18.38	0.30	▷ 37.27	0.01	-0.00	-0.00	BC 11
				Min V_z	7.05	0.00	▷ -16.26	0.00	0.00	0.00	BC 14
				Max M_T	-0.80	2.11	-2.81	▷ 0.88	-0.00	0.00	BC 23
				Min M_T	-6.40	-0.89	20.80	▷ -0.43	-0.00	0.00	BC 6
				Max M_y	0.00	0.00	0.00	0.00	▷ 0.00	0.00	
				Min M_y	-0.80	2.11	-2.81	0.88	▷ -0.00	0.00	BC 23
				Max M_z	-11.59	-0.32	26.15	-0.40	-0.00	▷ 0.00	BC 7
				Min M_z	-12.84	0.59	30.23	0.03	-0.00	▷ -0.00	BC 3
184	RC1	44	0.000	Max N	▷ 0.00	0.00	0.00	0.00	0.00	0.00	
			Links	Min N	▷ -6.85	1.19	37.08	0.33	-104.26	3.35	BC 6
				Max V_y	-6.85	▷ 1.19	37.08	0.33	-104.26	3.35	BC 6
				Min V_y	-2.97	▷ -2.96	-3.61	-0.91	11.18	-8.27	BC 23
				Max V_z	-4.84	-0.42	▷ 52.19	0.02	-147.34	-1.18	BC 11
				Min V_z	-6.37	0.00	▷ -16.38	0.00	48.32	0.00	BC 14
				Max M_T	-5.65	1.13	16.45	▷ 0.38	-45.96	3.17	BC 18
				Min M_T	-2.97	-2.96	-3.61	▷ -0.91	11.18	-8.27	BC 23
				Max M_y	-6.37	0.00	-16.38	0.00	▷ 48.32	0.00	BC 14
				Min M_y	-4.84	-0.42	52.19	0.02	▷ -147.34	-1.18	BC 11
				Max M_z	-6.85	1.19	37.08	0.33	-104.26	▷ 3.35	BC 6
				Min M_z	-2.97	-2.96	-3.61	-0.91	11.18	▷ -8.27	BC 23
			0.000	Max N	▷ 0.00	0.00	0.00	0.00	0.00	0.00	
			Rechts	Min N	▷ -6.85	1.19	37.08	0.33	-104.26	3.35	BC 6
				Max V_y	-6.85	▷ 1.19	37.08	0.33	-104.26	3.35	BC 6
				Min V_y	-2.97	▷ -2.96	-3.61	-0.91	11.18	-8.27	BC 23
				Max V_z	-4.84	-0.42	▷ 52.19	0.02	-147.34	-1.18	BC 11
				Min V_z	-6.37	0.00	▷ -16.38	0.00	48.32	0.00	BC 14
				Max M_T	-5.65	1.13	16.45	▷ 0.38	-45.96	3.17	BC 18
				Min M_T	-2.97	-2.96	-3.61	▷ -0.91	11.18	-8.27	BC 23
				Max M_y	-6.37	0.00	-16.38	0.00	▷ 48.32	0.00	BC 14
				Min M_y	-4.84	-0.42	52.19	0.02	▷ -147.34	-1.18	BC 11
				Max M_z	-6.85	1.19	37.08	0.33	-104.26	▷ 3.35	BC 6
				Min M_z	-2.97	-2.96	-3.61	-0.91	11.18	▷ -8.27	BC 23
			0.598	Max N	▷ 0.00	0.00	0.00	0.00	0.00	0.00	
				Min N	▷ -6.27	1.17	35.72	0.33	-82.41	2.65	BC 6
				Max V_y	-6.27	▷ 1.17	35.72	0.33	-82.41	2.65	BC 6
				Min V_y	-2.79	▷ -2.88	-3.76	-0.92	8.95	-6.51	BC 23
				Max V_z	-4.08	-0.41	▷ 50.40	0.02	-116.53	-0.93	BC 11
				Min V_z	-6.17	0.00	▷ -16.26	0.00	38.51	0.00	BC 14
				Max M_T	-5.36	1.10	15.71	▷ 0.38	-36.32	2.51	BC 18
				Min M_T	-2.79	-2.88	-3.76	▷ -0.92	8.95	-6.51	BC 23
				Max M_y	-6.17	0.00	-16.26	0.00	▷ 38.51	0.00	BC 14
				Min M_y	-4.08	-0.41	50.40	0.02	▷ -116.53	-0.93	BC 11
				Max M_z	-6.27	1.17	35.72	0.33	-82.41	▷ 2.65	BC 6
				Min M_z	-2.79	-2.88	-3.76	-0.92	8.95	▷ -6.51	BC 23
			0.679	Max N	▷ 0.00	0.00	0.00	0.00	0.00	0.00	
			Links	Min N	▷ -6.15	1.16	35.43	0.33	-79.53	2.56	BC 6
				Max V_y	-6.15	▷ 1.16	35.43	0.33	-79.53	2.56	BC 6
				Min V_y	-2.76	▷ -2.85	-3.75	-0.92	8.65	-6.27	BC 23
				Max V_z	-3.91	-0.41	▷ 50.00	0.02	-112.48	-0.90	BC 11
				Min V_z	-6.14	0.00	▷ -16.17	0.00	37.20	0.00	BC 14
				Max M_T	-5.32	1.10	15.58	▷ 0.38	-35.06	2.42	BC 18
				Min M_T	-2.76	-2.85	-3.75	▷ -0.92	8.65	-6.27	BC 23
				Max M_y	-6.14	0.00	-16.17	0.00	▷ 37.20	0.00	BC 14
				Min M_y	-3.91	-0.41	50.00	0.02	▷ -112.48	-0.90	BC 11
				Max M_z	-6.15	1.16	35.43	0.33	-79.53	▷ 2.56	BC 6
				Min M_z	-2.76	-2.85	-3.75	-0.92	8.65	▷ -6.27	BC 23
			0.679	Max N	▷ 0.00	0.00	0.00	0.00	0.00	0.00	
			Rechts	Min N	▷ -6.15	1.16	35.43	0.33	-79.53	2.56	BC 6
				Max V_y	-6.15	▷ 1.16	35.43	0.33	-79.53	2.56	BC 6
				Min V_y	-2.76	▷ -2.85	-3.75	-0.92	8.65	-6.27	BC 23
				Max V_z	-3.91	-0.41	▷ 50.00	0.02	-112.48	-0.90	BC 11
				Min V_z	-6.14	0.00	▷ -16.17	0.00	37.20	0.00	BC 14
				Max M_T	-5.32	1.10	15.58	▷ 0.38	-35.06	2.42	BC 18
				Min M_T	-2.76	-2.85	-3.75	▷ -0.92	8.65	-6.27	BC 23
				Max M_y	-6.14	0.00	-16.17	0.00	▷ 37.20	0.00	BC 14
				Min M_y	-3.91	-0.41	50.00	0.02	▷ -112.48	-0.90	BC 11
				Max M_z	-6.15	1.16	35.43	0.33	-79.53	▷ 2.56	BC 6
				Min M_z	-2.76	-2.85	-3.75	-0.92	8.65	▷ -6.27	BC 23
			0.707	Max N	▷ 0.00	0.00	0.00	0.00	0.00	0.00	
			Links	Min N	▷ -6.12	0.00	-16.13	0.00	36.74	0.00	BC 14

4.12 DOORSNEDES - SNEDEKRACHTEN

Resultaatcombinaties

Staaf No.	RC	Knoop No.	Snede x [m]		Krachten [kN] N	V_y	V_z	Momenten [kNm] M_T	M_y	M_z	Bijbehorend Belastingsgeval
184	RC1			Max V_y	-6.10	▷ 1.16	35.32	0.33	-78.53	2.53	BC 6
				Min V_y	-2.75	▷ -2.84	-3.74	-0.92	8.55	-6.19	BC 23
				Max V_z	-3.85	-0.41	▷ 49.85	0.02	-111.07	-0.89	BC 11
				Min V_z	-6.12	0.00	▷ -16.13	0.00	36.74	0.00	BC 14
				Max M_T	-5.30	1.09	15.53	▷ 0.38	-34.62	2.39	BC 18
				Min M_T	-2.75	-2.84	-3.74	▷ -0.92	8.55	-6.19	BC 23
				Max M_y	-6.12	0.00	-16.13	0.00	▷ 36.74	0.00	BC 14
				Min M_y	-3.85	-0.41	49.85	0.02	▷ -111.07	-0.89	BC 11
				Max M_z	-6.10	1.16	35.32	0.33	-78.53	▷ 2.53	BC 6
				Min M_z	-2.75	-2.84	-3.74	-0.92	8.55	▷ -6.19	BC 23
			0.707	Max N	▷ 0.00	0.00	0.00	0.00	0.00	0.00	
			Rechts	Min N	▷ -6.12	0.00	-16.13	0.00	36.74	0.00	BC 14
				Max V_y	-6.10	▷ 1.16	35.32	0.33	-78.53	2.53	BC 6
				Min V_y	-2.75	▷ -2.84	-3.74	-0.92	8.55	-6.19	BC 23
				Max V_z	-3.85	-0.41	▷ 49.85	0.02	-111.07	-0.89	BC 11
				Min V_z	-6.12	0.00	▷ -16.13	0.00	36.74	0.00	BC 14
				Max M_T	-5.30	1.09	15.53	▷ 0.38	-34.62	2.39	BC 18
				Min M_T	-2.75	-2.84	-3.74	▷ -0.92	8.55	-6.19	BC 23
				Max M_y	-6.12	0.00	-16.13	0.00	▷ 36.74	0.00	BC 14
				Min M_y	-3.85	-0.41	49.85	0.02	▷ -111.07	-0.89	BC 11
				Max M_z	-6.10	1.16	35.32	0.33	-78.53	▷ 2.53	BC 6
				Min M_z	-2.75	-2.84	-3.74	-0.92	8.55	▷ -6.19	BC 23
			1.250	Max N	▷ 0.00	0.00	0.00	0.00	0.00	0.00	
				Min N	▷ -5.89	-0.00	-15.41	0.00	28.18	-0.00	BC 14
				Max V_y	-5.27	▷ 1.09	33.27	0.34	-59.91	1.94	BC 6
				Min V_y	-2.57	▷ -2.66	-3.60	-0.91	6.55	-4.70	BC 23
				Max V_z	-2.72	-0.38	▷ 47.00	0.02	-84.78	-0.67	BC 11
				Min V_z	-5.89	-0.00	▷ -15.41	0.00	28.18	-0.00	BC 14
				Max M_T	-4.98	1.03	14.63	▷ 0.39	-26.43	1.82	BC 18
				Min M_T	-2.57	-2.66	-3.60	▷ -0.91	6.55	-4.70	BC 23
				Max M_y	-5.89	-0.00	-15.41	0.00	▷ 28.18	-0.00	BC 14
				Min M_y	-2.72	-0.38	47.00	0.02	▷ -84.78	-0.67	BC 11
				Max M_z	-5.27	1.09	33.27	0.34	-59.91	▷ 1.94	BC 6
				Min M_z	-2.57	-2.66	-3.60	-0.91	6.55	▷ -4.70	BC 23
			1.902	Max N	▷ 0.00	0.00	0.00	0.00	0.00	0.00	
				Min N	▷ -5.63	-0.00	-14.50	0.00	18.43	-0.00	BC 14
				Max V_y	-4.32	▷ 1.02	30.90	0.36	-38.99	1.26	BC 6
				Min V_y	-2.37	▷ -2.44	-3.40	-0.91	4.27	-3.03	BC 23
				Max V_z	-1.41	-0.35	▷ 43.71	0.01	-55.21	-0.43	BC 11
				Min V_z	-5.63	-0.00	▷ -14.50	0.00	18.43	-0.00	BC 14
				Max M_T	-4.62	0.95	13.62	▷ 0.40	-17.22	1.18	BC 18
				Min M_T	-2.37	-2.44	-3.40	▷ -0.91	4.27	-3.03	BC 23
				Max M_y	-5.63	-0.00	-14.50	0.00	▷ 18.43	-0.00	BC 14
				Min M_y	-1.41	-0.35	43.71	0.01	▷ -55.21	-0.43	BC 11
				Max M_z	-4.32	1.02	30.90	0.36	-38.99	▷ 1.26	BC 6
				Min M_z	-2.37	-2.44	-3.40	-0.91	4.27	▷ -3.03	BC 23
			2.554	Max N	▷ 0.00	0.00	0.00	0.00	0.00	0.00	
				Min N	▷ -5.39	-0.00	-13.55	0.00	9.28	-0.00	BC 14
				Max V_y	-3.41	▷ 0.94	28.64	0.39	-19.59	0.64	BC 6
				Min V_y	-2.19	▷ -2.22	-3.14	-0.90	2.14	-1.51	BC 23
				Max V_z	-0.17	-0.32	▷ 40.54	-0.00	-27.75	-0.22	BC 11
				Min V_z	-5.39	-0.00	▷ -13.55	0.00	9.28	-0.00	BC 14
				Max M_T	-4.29	0.87	12.67	▷ 0.41	-8.65	0.59	BC 18
				Min M_T	-2.19	-2.22	-3.14	▷ -0.90	2.14	-1.51	BC 23
				Max M_y	-5.39	-0.00	-13.55	0.00	▷ 9.28	-0.00	BC 14
				Min M_y	-0.17	-0.32	40.54	-0.00	▷ -27.75	-0.22	BC 11
				Max M_z	-3.41	0.94	28.64	0.39	-19.59	▷ 0.64	BC 6
				Min M_z	-2.19	-2.22	-3.14	-0.90	2.14	▷ -1.51	BC 23
			2.581	Max N	▷ 0.00	0.00	0.00	0.00	0.00	0.00	
			Links	Min N	▷ -5.38	-0.00	-13.51	0.00	8.93	-0.00	BC 14
				Max V_y	-3.38	▷ 0.94	28.55	0.39	-18.83	0.61	BC 6
				Min V_y	-2.18	▷ -2.21	-3.13	-0.90	2.06	-1.45	BC 23
				Max V_z	-0.12	-0.32	▷ 40.41	-0.00	-26.68	-0.21	BC 11
				Min V_z	-5.38	-0.00	▷ -13.51	0.00	8.93	-0.00	BC 14
				Max M_T	-4.28	0.87	12.63	▷ 0.41	-8.32	0.57	BC 18
				Min M_T	-2.18	-2.21	-3.13	▷ -0.90	2.06	-1.45	BC 23
				Max M_y	-5.38	-0.00	-13.51	0.00	▷ 8.93	-0.00	BC 14
				Min M_y	-0.12	-0.32	40.41	-0.00	▷ -26.68	-0.21	BC 11
				Max M_z	-3.38	0.94	28.55	0.39	-18.83	▷ 0.61	BC 6
				Min M_z	-2.18	-2.21	-3.13	-0.90	2.06	▷ -1.45	BC 23
			2.581	Max N	▷ 0.00	0.00	0.00	0.00	0.00	0.00	
			Rechts	Min N	▷ -5.38	-0.00	-13.51	0.00	8.93	-0.00	BC 14
				Max V_y	-3.38	▷ 0.94	28.55	0.39	-18.83	0.61	BC 6
				Min V_y	-2.18	▷ -2.21	-3.13	-0.90	2.06	-1.45	BC 23
				Max V_z	-0.12	-0.32	▷ 40.41	-0.00	-26.68	-0.21	BC 11
				Min V_z	-5.38	-0.00	▷ -13.51	0.00	8.93	-0.00	BC 14
				Max M_T	-4.28	0.87	12.63	▷ 0.41	-8.32	0.57	BC 18
				Min M_T	-2.18	-2.21	-3.13	▷ -0.90	2.06	-1.45	BC 23
				Max M_y	-5.38	-0.00	-13.51	0.00	▷ 8.93	-0.00	BC 14
				Min M_y	-0.12	-0.32	40.41	-0.00	▷ -26.68	-0.21	BC 11
				Max M_z	-3.38	0.94	28.55	0.39	-18.83	▷ 0.61	BC 6
				Min M_z	-2.18	-2.21	-3.13	-0.90	2.06	▷ -1.45	BC 23
			2.677	Max N	▷ 0.05	-0.31	39.98	-0.00	-22.81	-0.18	BC 11
			Links	Min N	▷ -5.35	-0.00	-13.36	0.00	7.63	-0.00	BC 14

4.12 DOORSNEDES - SNEDEKRACHTEN

Resultaatcombinaties

Staaf No.	RC	Knoop No.	Snede x [m]		Krachten [kN] N	V_y	V_z	Momenten [kNm] M_T	M_y	M_z	Bijbehorend Belastingsgeval
184	RC1			Max V_y	-3.25	▷ 0.93	28.24	0.40	-16.09	0.52	BC 6
				Min V_y	-2.16	▷ -2.18	-3.09	-0.90	1.76	-1.23	BC 23
				Max V_z	0.05	-0.31	▷ 39.98	-0.00	-22.81	-0.18	BC 11
				Min V_z	-5.35	-0.00	▷ -13.36	0.00	7.63	-0.00	BC 14
				Max M_T	-4.23	0.86	12.50	▷ 0.41	-7.11	0.49	BC 18
				Min M_T	-2.16	-2.18	-3.09	▷ -0.90	1.76	-1.23	BC 23
				Max M_y	-5.35	-0.00	-13.36	0.00	▷ 7.63	-0.00	BC 14
				Min M_y	0.05	-0.31	39.98	-0.00	▷ -22.81	-0.18	BC 11
				Max M_z	-3.25	0.93	28.24	0.40	-16.09	▷ 0.52	BC 6
				Min M_z	-2.16	-2.18	-3.09	-0.90	1.76	▷ -1.23	BC 23
			2.677	Max N	▷ 0.05	-0.31	39.98	-0.00	-22.81	-0.18	BC 11
			Rechts	Min N	▷ -5.35	-0.00	-13.36	0.00	7.63	-0.00	BC 14
				Max V_y	-3.25	▷ 0.93	28.24	0.40	-16.09	0.52	BC 6
				Min V_y	-2.16	▷ -2.18	-3.09	-0.90	1.76	-1.23	BC 23
				Max V_z	0.05	-0.31	▷ 39.98	-0.00	-22.81	-0.18	BC 11
				Min V_z	-5.35	-0.00	▷ -13.36	0.00	7.63	-0.00	BC 14
				Max M_T	-4.23	0.86	12.50	▷ 0.41	-7.11	0.49	BC 18
				Min M_T	-2.16	-2.18	-3.09	▷ -0.90	1.76	-1.23	BC 23
				Max M_y	-5.35	-0.00	-13.36	0.00	▷ 7.63	-0.00	BC 14
				Min M_y	0.05	-0.31	39.98	-0.00	▷ -22.81	-0.18	BC 11
				Max M_z	-3.25	0.93	28.24	0.40	-16.09	▷ 0.52	BC 6
				Min M_z	-2.16	-2.18	-3.09	-0.90	1.76	▷ -1.23	BC 23
			3.201	Max N	▷ 0.54	-0.30	38.71	-0.01	-2.27	-0.02	BC 11
				Min N	▷ -5.22	0.00	-12.99	0.00	0.76	0.00	BC 14
				Max V_y	-2.88	▷ 0.90	27.28	0.42	-1.60	0.05	BC 6
				Min V_y	-2.06	▷ -2.08	-3.03	-0.89	0.17	-0.12	BC 23
				Max V_z	0.54	-0.30	▷ 38.71	-0.01	-2.27	-0.02	BC 11
				Min V_z	-5.22	0.00	▷ -12.99	0.00	0.76	0.00	BC 14
				Max M_T	-4.05	0.83	12.00	▷ 0.42	-0.70	0.05	BC 18
				Min M_T	-2.06	-2.08	-3.03	▷ -0.89	0.17	-0.12	BC 23
				Max M_y	-5.22	0.00	-12.99	0.00	▷ 0.76	0.00	BC 14
				Min M_y	0.54	-0.30	38.71	-0.01	▷ -2.27	-0.02	BC 11
				Max M_z	-2.88	0.90	27.28	0.42	-1.60	▷ 0.05	BC 6
				Min M_z	-2.06	-2.08	-3.03	-0.89	0.17	▷ -0.12	BC 23
			3.260	Max N	▷ 0.55	-0.30	38.68	-0.01	-0.00	0.00	BC 11
			Links	Min N	▷ -5.22	0.00	-13.00	0.00	0.00	0.00	BC 14
				Max V_y	-2.86	▷ 0.90	27.26	0.43	-0.00	-0.00	BC 6
				Min V_y	-2.05	▷ -2.08	-3.04	-0.89	-0.00	-0.00	BC 23
				Max V_z	0.55	-0.30	▷ 38.68	-0.01	-0.00	0.00	BC 11
				Min V_z	-5.22	0.00	▷ -13.00	0.00	0.00	0.00	BC 14
				Max M_T	-2.86	0.90	27.26	▷ 0.43	-0.00	-0.00	BC 6
				Min M_T	-2.05	-2.08	-3.04	▷ -0.89	-0.00	-0.00	BC 23
				Max M_y	-5.22	0.00	-13.00	0.00	▷ 0.00	0.00	BC 14
				Min M_y	-2.05	-2.08	-3.04	-0.89	▷ -0.00	-0.00	BC 23
				Max M_z	0.06	-0.59	33.28	-0.03	-0.00	▷ 0.00	BC 5
				Min M_z	-0.38	0.32	28.33	0.40	-0.00	▷ -0.00	BC 7
		7	3.260	Max N	▷ 0.55	-0.30	38.68	-0.01	-0.00	0.00	BC 11
			Rechts	Min N	▷ -5.22	0.00	-13.00	0.00	0.00	0.00	BC 14
				Max V_y	-2.86	▷ 0.90	27.26	0.43	-0.00	-0.00	BC 6
				Min V_y	-2.05	▷ -2.08	-3.04	-0.89	-0.00	-0.00	BC 23
				Max V_z	0.55	-0.30	▷ 38.68	-0.01	-0.00	0.00	BC 11
				Min V_z	-5.22	0.00	▷ -13.00	0.00	0.00	0.00	BC 14
				Max M_T	-2.86	0.90	27.26	▷ 0.43	-0.00	-0.00	BC 6
				Min M_T	-2.05	-2.08	-3.04	▷ -0.89	-0.00	-0.00	BC 23
				Max M_y	0.00	0.00	0.00	0.00	▷ 0.00	0.00	
				Min M_y	-2.05	-2.08	-3.04	-0.89	▷ -0.00	-0.00	BC 23
				Max M_z	0.06	-0.59	33.28	-0.03	-0.00	▷ 0.00	BC 5
				Min M_z	-0.38	0.32	28.33	0.40	-0.00	▷ -0.00	BC 7
189	RC1	34	0.000	Max N	▷ 2.36	3.41	-16.26	-0.04	51.57	6.00	BC 14
			Links	Min N	▷ -34.94	-1.90	68.88	-0.08	-206.30	-3.69	BC 9
				Max V_y	2.36	▷ 3.41	-16.26	-0.04	51.57	6.00	BC 14
				Min V_y	-27.03	▷ -2.65	48.19	-0.04	-141.94	-5.52	BC 5
				Max V_z	-31.77	-0.35	▷ 71.10	-0.13	-216.28	-0.97	BC 12
				Min V_z	-5.40	0.12	▷ -23.04	-0.02	83.64	0.25	BC 23
				Max M_T	-1.80	0.57	-18.38	▷ 0.00	59.58	1.13	BC 15
				Min M_T	-24.06	1.53	60.50	▷ -0.15	-190.06	2.39	BC 6
				Max M_y	-5.40	0.12	-23.04	-0.02	▷ 83.64	0.25	BC 23
				Min M_y	-31.77	-0.35	71.10	-0.13	▷ -216.28	-0.97	BC 12
				Max M_z	2.36	3.41	-16.26	-0.04	51.57	▷ 6.00	BC 14
				Min M_z	-27.03	-2.65	48.19	-0.04	-141.94	▷ -5.52	BC 5
			0.000	Max N	▷ 2.36	3.41	-16.26	-0.04	51.57	6.00	BC 14
			Rechts	Min N	▷ -34.94	-1.90	68.88	-0.08	-206.30	-3.69	BC 9
				Max V_y	2.36	▷ 3.41	-16.26	-0.04	51.57	6.00	BC 14
				Min V_y	-27.03	▷ -2.65	48.19	-0.04	-141.94	-5.52	BC 5
				Max V_z	-31.77	-0.35	▷ 71.10	-0.13	-216.28	-0.97	BC 12
				Min V_z	-5.40	0.12	▷ -23.04	-0.02	83.64	0.25	BC 23
				Max M_T	-1.80	0.57	-18.38	▷ 0.00	59.58	1.13	BC 15
				Min M_T	-24.06	1.53	60.50	▷ -0.15	-190.06	2.39	BC 6
				Max M_y	-5.40	0.12	-23.04	-0.02	▷ 83.64	0.25	BC 23
				Min M_y	-31.77	-0.35	71.10	-0.13	▷ -216.28	-0.97	BC 12
				Max M_z	2.36	3.41	-16.26	-0.04	51.57	▷ 6.00	BC 14
				Min M_z	-27.03	-2.65	48.19	-0.04	-141.94	▷ -5.52	BC 5
			0.645	Max N	▷ 2.50	3.38	-16.16	-0.02	41.06	3.81	BC 14
			Links	Min N	▷ -34.27	-1.91	66.67	-0.01	-162.41	-2.46	BC 9

4.12 DOORSNEDES - SNEDEKRACHTEN

Resultaatcombinaties

Staaf No.	RC	Knoop No.	Snede x [m]		Krachten [kN] N	V_y	V_z	Momenten [kNm] M_T	M_y	M_z	Bijbehorend Belastingsgeval
189	RC1			Max V_y	2.50	▷ 3.38	-16.16	-0.02	41.06	3.81	BC 14
				Min V_y	-26.55	▷ -2.61	46.51	0.01	-111.29	-3.82	BC 5
				Max V_z	-31.11	-0.38	▷ 68.88	-0.10	-170.96	-0.74	BC 12
				Min V_z	-5.24	0.12	▷ -22.94	-0.02	68.75	0.17	BC 23
				Max M_T	-26.55	-2.61	46.51	▷ 0.01	-111.29	-3.82	BC 5
				Min M_T	-23.57	1.51	58.68	▷ -0.16	-151.49	1.40	BC 6
				Max M_y	-5.24	0.12	-22.94	-0.02	▷ 68.75	0.17	BC 23
				Min M_y	-31.11	-0.38	68.88	-0.10	▷ -170.96	-0.74	BC 12
				Max M_z	2.50	3.38	-16.16	-0.02	41.06	▷ 3.81	BC 14
				Min M_z	-26.55	-2.61	46.51	0.01	-111.29	▷ -3.82	BC 5
			0.645	Max N	▷ 2.50	3.38	-16.16	-0.02	41.06	3.81	BC 14
			Rechts	Min N	▷ -34.27	-1.91	66.67	-0.01	-162.41	-2.46	BC 9
				Max V_y	2.50	▷ 3.38	-16.16	-0.02	41.06	3.81	BC 14
				Min V_y	-26.55	▷ -2.61	46.51	0.01	-111.29	-3.82	BC 5
				Max V_z	-31.11	-0.38	▷ 68.88	-0.10	-170.96	-0.74	BC 12
				Min V_z	-5.24	0.12	▷ -22.94	-0.02	68.75	0.17	BC 23
				Max M_T	-26.55	-2.61	46.51	▷ 0.01	-111.29	-3.82	BC 5
				Min M_T	-23.57	1.51	58.68	▷ -0.16	-151.49	1.40	BC 6
				Max M_y	-5.24	0.12	-22.94	-0.02	▷ 68.75	0.17	BC 23
				Min M_y	-31.11	-0.38	68.88	-0.10	▷ -170.96	-0.74	BC 12
				Max M_z	2.50	3.38	-16.16	-0.02	41.06	▷ 3.81	BC 14
				Min M_z	-26.55	-2.61	46.51	0.01	-111.29	▷ -3.82	BC 5
			0.707	Max N	▷ 2.51	3.37	-16.10	-0.02	40.06	3.60	BC 14
			Links	Min N	▷ -34.18	-1.92	66.32	-0.01	-158.26	-2.34	BC 9
				Max V_y	2.51	▷ 3.37	-16.10	-0.02	40.06	3.60	BC 14
				Min V_y	-26.48	▷ -2.59	46.27	0.01	-108.39	-3.66	BC 5
				Max V_z	-31.02	-0.38	▷ 68.54	-0.10	-166.67	-0.72	BC 12
				Min V_z	-5.22	0.12	▷ -22.88	-0.02	67.32	0.17	BC 23
				Max M_T	-26.48	-2.59	46.27	▷ 0.01	-108.39	-3.66	BC 5
				Min M_T	-23.51	1.50	58.41	▷ -0.16	-147.84	1.31	BC 6
				Max M_y	-5.22	0.12	-22.88	-0.02	▷ 67.32	0.17	BC 23
				Min M_y	-31.02	-0.38	68.54	-0.10	▷ -166.67	-0.72	BC 12
				Max M_z	2.51	3.37	-16.10	-0.02	40.06	▷ 3.60	BC 14
				Min M_z	-26.48	-2.59	46.27	0.01	-108.39	▷ -3.66	BC 5
			0.707	Max N	▷ 2.51	3.37	-16.10	-0.02	40.05	3.60	BC 14
			Rechts	Min N	▷ -34.18	-1.92	66.32	-0.01	-158.26	-2.34	BC 9
				Max V_y	2.51	▷ 3.37	-16.10	-0.02	40.05	3.60	BC 14
				Min V_y	-26.48	▷ -2.59	46.27	0.01	-108.39	-3.66	BC 5
				Max V_z	-31.02	-0.38	▷ 68.54	-0.10	-166.67	-0.72	BC 12
				Min V_z	-5.22	0.12	▷ -22.88	-0.02	67.32	0.17	BC 23
				Max M_T	-26.48	-2.59	46.27	▷ 0.01	-108.39	-3.66	BC 5
				Min M_T	-23.51	1.50	58.41	▷ -0.16	-147.84	1.31	BC 6
				Max M_y	-5.22	0.12	-22.88	-0.02	▷ 67.32	0.17	BC 23
				Min M_y	-31.02	-0.38	68.54	-0.10	▷ -166.67	-0.72	BC 12
				Max M_z	2.51	3.37	-16.10	-0.02	40.05	▷ 3.60	BC 14
				Min M_z	-26.48	-2.59	46.27	0.01	-108.39	▷ -3.66	BC 5
			1.290	Max N	▷ 2.62	3.35	-15.94	-0.02	30.77	1.65	BC 14
			Links	Min N	▷ -33.63	-1.93	64.47	0.01	-120.27	-1.22	BC 9
				Max V_y	2.62	▷ 3.35	-15.94	-0.02	30.77	1.65	BC 14
				Min V_y	-26.08	▷ -2.54	44.85	0.02	-81.92	-2.17	BC 5
				Max V_z	-30.48	-0.40	▷ 66.68	-0.07	-127.39	-0.49	BC 12
				Min V_z	-5.07	0.12	▷ -22.71	-0.01	54.09	0.10	BC 23
				Max M_T	-32.00	-2.42	60.67	▷ 0.03	-111.15	-1.81	BC 11
				Min M_T	-23.11	1.47	56.84	▷ -0.15	-114.35	0.44	BC 6
				Max M_y	-5.07	0.12	-22.71	-0.01	▷ 54.09	0.10	BC 23
				Min M_y	-30.48	-0.40	66.68	-0.07	▷ -127.39	-0.49	BC 12
				Max M_z	2.62	3.35	-15.94	-0.02	30.77	▷ 1.65	BC 14
				Min M_z	-3.03	-2.14	-7.33	-0.08	20.02	▷ -2.30	BC 21
			1.290	Max N	▷ 2.60	1.80	-12.17	-0.02	30.77	2.05	BC 14
			Rechts	Min N	▷ -29.44	-0.96	52.12	0.01	-121.22	-1.49	BC 9
				Max V_y	2.60	▷ 1.80	-12.17	-0.02	30.77	2.05	BC 14
				Min V_y	-2.43	▷ -2.14	-6.57	-0.08	19.93	-2.69	BC 21
				Max V_z	-26.51	-0.15	▷ 54.03	-0.08	-128.18	-0.59	BC 12
				Min V_z	-4.58	0.08	▷ -18.06	-0.01	53.57	0.12	BC 23
				Max M_T	-27.83	-1.48	48.67	▷ 0.02	-112.06	-2.17	BC 11
				Min M_T	-20.42	0.83	46.82	▷ -0.15	-114.81	0.57	BC 6
				Max M_y	-4.58	0.08	-18.06	-0.01	▷ 53.57	0.12	BC 23
				Min M_y	-26.51	-0.15	54.03	-0.08	▷ -128.18	-0.59	BC 12
				Max M_z	2.60	1.80	-12.17	-0.02	30.77	▷ 2.05	BC 14
				Min M_z	-2.43	-2.14	-6.57	-0.08	19.93	▷ -2.69	BC 21
			1.935	Max N	▷ 2.71	1.77	-12.02	-0.02	22.92	0.90	BC 14
			Links	Min N	▷ -28.86	-0.96	50.08	0.01	-88.10	-0.88	BC 9
				Max V_y	2.71	▷ 1.77	-12.02	-0.02	22.92	0.90	BC 14
				Min V_y	-2.30	▷ -2.02	-6.70	-0.08	15.63	-1.33	BC 21
				Max V_z	-25.94	-0.17	▷ 51.98	-0.06	-93.83	-0.49	BC 12
				Min V_z	-4.43	0.08	▷ -17.90	-0.01	41.92	0.07	BC 23
				Max M_T	-27.26	-1.46	46.70	▷ 0.02	-81.15	-1.23	BC 11
				Min M_T	-20.00	0.80	45.14	▷ -0.13	-85.03	0.03	BC 6
				Max M_y	-4.43	0.08	-17.90	-0.01	▷ 41.92	0.07	BC 23
				Min M_y	-25.94	-0.17	51.98	-0.06	▷ -93.83	-0.49	BC 12
				Max M_z	2.71	1.77	-12.02	-0.02	22.92	▷ 0.90	BC 14
				Min M_z	-22.57	-1.77	34.59	0.02	-59.71	▷ -1.40	BC 5
			1.935	Max N	▷ 2.71	1.77	-12.02	-0.02	22.92	0.90	BC 14
			Rechts	Min N	▷ -28.86	-0.96	50.08	0.01	-88.10	-0.88	BC 9

4.12 DOORSNEDES - SNEDEKRACHTEN

Resultaatcombinaties

Staaf No.	RC	Knoop No.	Snede x [m]		Krachten [kN] N	V_y	V_z	Momenten [kNm] M_T	M_y	M_z	Bijbehorend Belastingsgeval
189	RC1			Max V_y	2.71	▷ 1.77	-12.02	-0.02	22.92	0.90	BC 14
				Min V_y	-2.30	▷ -2.02	-6.70	-0.08	15.63	-1.33	BC 21
				Max V_z	-25.94	-0.17	▷ 51.98	-0.06	-93.83	-0.49	BC 12
				Min V_z	-4.43	0.08	▷ -17.90	-0.01	41.92	0.07	BC 23
				Max M_T	-27.26	-1.46	46.70	▷ 0.02	-81.15	-1.23	BC 11
				Min M_T	-20.00	0.80	45.14	▷ -0.13	-85.03	0.03	BC 6
				Max M_y	-4.43	0.08	-17.90	-0.01	▷ 41.92	0.07	BC 23
				Min M_y	-25.94	-0.17	51.98	-0.06	▷ -93.83	-0.49	BC 12
				Max M_z	2.71	1.77	-12.02	-0.02	22.92	▷ 0.90	BC 14
				Min M_z	-22.57	-1.77	34.59	0.02	-59.71	▷ -1.40	BC 5
			1.997	Max N	▷ 2.72	1.77	-11.94	-0.02	22.17	0.79	BC 14
			Links	Min N	▷ -28.78	-0.97	49.76	0.01	-84.98	-0.82	BC 9
				Max V_y	2.72	▷ 1.77	-11.94	-0.02	22.17	0.79	BC 14
				Min V_y	-2.28	▷ -2.00	-6.68	-0.08	15.21	-1.20	BC 21
				Max V_z	-25.86	-0.17	▷ 51.66	-0.06	-90.60	-0.48	BC 12
				Min V_z	-4.42	0.08	▷ -17.82	-0.01	40.81	0.06	BC 23
				Max M_T	-27.18	-1.45	46.39	▷ 0.02	-78.25	-1.13	BC 11
				Min M_T	-19.95	0.79	44.88	▷ -0.13	-82.22	-0.02	BC 6
				Max M_y	-4.42	0.08	-17.82	-0.01	▷ 40.81	0.06	BC 23
				Min M_y	-25.86	-0.17	51.66	-0.06	▷ -90.60	-0.48	BC 12
				Max M_z	2.72	1.77	-11.94	-0.02	22.17	▷ 0.79	BC 14
				Min M_z	-22.51	-1.76	34.36	0.01	-57.57	▷ -1.29	BC 5
			1.997	Max N	▷ 2.72	1.77	-11.94	-0.02	22.17	0.79	BC 14
			Rechts	Min N	▷ -28.78	-0.97	49.76	0.01	-84.98	-0.82	BC 9
				Max V_y	2.72	▷ 1.77	-11.94	-0.02	22.17	0.79	BC 14
				Min V_y	-2.28	▷ -2.00	-6.68	-0.08	15.21	-1.20	BC 21
				Max V_z	-25.86	-0.17	▷ 51.66	-0.06	-90.60	-0.48	BC 12
				Min V_z	-4.42	0.08	▷ -17.82	-0.01	40.81	0.06	BC 23
				Max M_T	-27.18	-1.45	46.39	▷ 0.02	-78.25	-1.13	BC 11
				Min M_T	-19.95	0.79	44.88	▷ -0.13	-82.22	-0.02	BC 6
				Max M_y	-4.42	0.08	-17.82	-0.01	▷ 40.81	0.06	BC 23
				Min M_y	-25.86	-0.17	51.66	-0.06	▷ -90.60	-0.48	BC 12
				Max M_z	2.72	1.77	-11.94	-0.02	22.17	▷ 0.79	BC 14
				Min M_z	-22.51	-1.76	34.36	0.01	-57.56	▷ -1.29	BC 5
			2.580	Max N	▷ 2.82	1.74	-11.73	-0.03	15.32	-0.23	BC 14
			Links	Min N	▷ -28.31	-0.97	48.05	0.00	-56.59	-0.25	BC 9
				Max V_y	2.82	▷ 1.74	-11.73	-0.03	15.32	-0.23	BC 14
				Min V_y	-2.16	▷ -1.88	-6.76	-0.08	11.32	-0.09	BC 21
				Max V_z	-25.40	-0.19	▷ 49.94	-0.06	-61.11	-0.38	BC 12
				Min V_z	-4.29	0.08	▷ -17.61	-0.01	30.54	0.02	BC 23
				Max M_T	-0.97	0.30	-13.46	▷ 0.01	18.25	0.09	BC 15
				Min M_T	1.64	-0.44	-5.03	▷ -0.12	8.40	-0.41	BC 20
				Max M_y	-4.29	0.08	-17.61	-0.01	▷ 30.54	0.02	BC 23
				Min M_y	-25.40	-0.19	49.94	-0.06	▷ -61.11	-0.38	BC 12
				Max M_z	-0.97	0.30	-13.46	0.01	18.25	▷ 0.09	BC 15
				Min M_z	-18.28	-0.25	34.76	-0.09	-40.89	▷ -0.59	BC 4
			2.580	Max N	▷ 2.98	1.24	-9.06	-0.03	15.41	0.29	BC 14
			Rechts	Min N	▷ -24.03	-1.06	36.41	0.00	-57.82	-0.64	BC 9
				Max V_y	2.98	▷ 1.24	-9.06	-0.03	15.41	0.29	BC 14
				Min V_y	-19.06	▷ -1.64	24.99	-0.01	-38.89	-0.86	BC 5
				Max V_z	-21.34	-0.54	▷ 38.03	-0.06	-62.22	-0.55	BC 12
				Min V_z	-3.62	0.08	▷ -14.31	-0.01	30.26	0.05	BC 23
				Max M_T	-0.60	0.32	-10.32	▷ 0.01	18.24	0.21	BC 15
				Min M_T	1.88	-0.70	-4.46	▷ -0.12	8.48	-0.56	BC 20
				Max M_y	-3.62	0.08	-14.31	-0.01	▷ 30.26	0.05	BC 23
				Min M_y	-21.34	-0.54	38.03	-0.06	▷ -62.22	-0.55	BC 12
				Max M_z	2.98	1.24	-9.06	-0.03	15.41	▷ 0.29	BC 14
				Min M_z	-19.06	-1.64	24.99	-0.01	-38.89	▷ -0.86	BC 5
			3.225	Max N	▷ 3.07	1.21	-8.85	-0.03	9.58	-0.50	BC 14
			Links	Min N	▷ -23.54	-1.06	34.54	-0.01	-34.80	0.04	BC 9
				Max V_y	3.07	▷ 1.21	-8.85	-0.03	9.58	-0.50	BC 14
				Min V_y	-18.69	▷ -1.58	23.59	-0.02	-23.12	0.19	BC 5
				Max V_z	-20.86	-0.55	▷ 36.15	-0.05	-38.15	-0.20	BC 12
				Min V_z	-3.49	0.08	▷ -14.10	-0.00	21.04	-0.00	BC 23
				Max M_T	-0.48	0.32	-10.10	▷ 0.01	11.60	0.00	BC 15
				Min M_T	1.97	-0.61	-4.53	▷ -0.12	5.56	-0.13	BC 20
				Max M_y	-3.49	0.08	-14.10	-0.00	▷ 21.04	-0.00	BC 23
				Min M_y	-20.86	-0.55	36.15	-0.05	▷ -38.15	-0.20	BC 12
				Max M_z	-1.58	-1.50	-5.78	-0.08	7.56	▷ 0.38	BC 21
				Min M_z	0.04	0.97	-12.82	-0.03	18.98	▷ -0.51	BC 22
			3.225	Max N	▷ 3.07	1.21	-8.85	-0.03	9.58	-0.50	BC 14
			Rechts	Min N	▷ -23.54	-1.06	34.54	-0.01	-34.80	0.04	BC 9
				Max V_y	3.07	▷ 1.21	-8.85	-0.03	9.58	-0.50	BC 14
				Min V_y	-18.69	▷ -1.58	23.59	-0.02	-23.12	0.19	BC 5
				Max V_z	-20.86	-0.55	▷ 36.15	-0.05	-38.15	-0.20	BC 12
				Min V_z	-3.49	0.08	▷ -14.10	-0.00	21.04	-0.00	BC 23
				Max M_T	-0.48	0.32	-10.10	▷ 0.01	11.60	0.00	BC 15
				Min M_T	1.97	-0.61	-4.53	▷ -0.12	5.56	-0.13	BC 20
				Max M_y	-3.49	0.08	-14.10	-0.00	▷ 21.04	-0.00	BC 23
				Min M_y	-20.86	-0.55	36.15	-0.05	▷ -38.15	-0.20	BC 12
				Max M_z	-1.58	-1.50	-5.78	-0.08	7.56	▷ 0.38	BC 21
				Min M_z	0.04	0.97	-12.82	-0.03	18.98	▷ -0.51	BC 22
			3.287	Max N	▷ 3.08	1.20	-8.77	-0.03	9.03	-0.58	BC 14
			Links	Min N	▷ -23.47	-1.06	34.24	-0.01	-32.65	0.11	BC 9

4.12 DOORSNEDES - SNEDEKRACHTEN

Resultaatcombinaties

Staaf No.	RC	Knoop No.	Snede x [m]		Krachten [kN] N	V_y	V_z	Momenten [kNm] M_T	M_y	M_z	Bijbehorend Belastingsgeval
189	RC1			Max V_y	3.08	▷ 1.20	-8.77	-0.03	9.03	-0.58	BC 14
				Min V_y	-18.64	▷ -1.57	23.38	-0.02	-21.66	0.28	BC 5
				Max V_z	-20.79	-0.56	▷ 35.85	-0.05	-35.91	-0.17	BC 12
				Min V_z	-3.48	0.08	▷ -14.02	-0.00	20.16	-0.01	BC 23
				Max M_T	-0.46	0.32	-10.02	▷ 0.01	10.97	-0.02	BC 15
				Min M_T	1.99	-0.59	-4.51	▷ -0.12	5.27	-0.09	BC 20
				Max M_y	-3.48	0.08	-14.02	-0.00	▷ 20.16	-0.01	BC 23
				Min M_y	-20.79	-0.56	35.85	-0.05	▷ -35.91	-0.17	BC 12
				Max M_z	-1.56	-1.47	-5.76	-0.07	7.20	▷ 0.47	BC 21
				Min M_z	3.08	1.20	-8.77	-0.03	9.03	▷ -0.58	BC 14
			3.287	Max N	▷ 3.08	1.20	-8.77	-0.03	9.03	-0.58	BC 14
			Rechts	Min N	▷ -23.47	-1.06	34.24	-0.01	-32.65	0.11	BC 9
				Max V_y	3.08	▷ 1.20	-8.77	-0.03	9.03	-0.58	BC 14
				Min V_y	-18.64	▷ -1.57	23.38	-0.02	-21.66	0.28	BC 5
				Max V_z	-20.79	-0.56	▷ 35.85	-0.05	-35.91	-0.17	BC 12
				Min V_z	-3.48	0.08	▷ -14.02	-0.00	20.16	-0.01	BC 23
				Max M_T	-0.46	0.32	-10.02	▷ 0.01	10.97	-0.02	BC 15
				Min M_T	1.99	-0.59	-4.51	▷ -0.12	5.27	-0.09	BC 20
				Max M_y	-3.48	0.08	-14.02	-0.00	▷ 20.16	-0.01	BC 23
				Min M_y	-20.79	-0.56	35.85	-0.05	▷ -35.91	-0.17	BC 12
				Max M_z	-1.56	-1.47	-5.76	-0.07	7.20	▷ 0.47	BC 21
				Min M_z	3.08	1.20	-8.77	-0.03	9.03	▷ -0.58	BC 14
			3.870	Max N	▷ 3.16	1.18	-8.51	-0.04	4.04	-1.27	BC 14
			Links	Min N	▷ -23.07	-1.06	32.67	-0.02	-13.26	0.73	BC 9
				Max V_y	3.16	▷ 1.18	-8.51	-0.04	4.04	-1.27	BC 14
				Min V_y	-18.34	▷ -1.51	22.20	-0.04	-8.45	1.17	BC 5
				Max V_z	-20.41	-0.57	▷ 34.28	-0.05	-15.58	0.16	BC 12
				Min V_z	-3.37	0.08	▷ -13.75	-0.00	12.12	-0.06	BC 23
				Max M_T	-0.36	0.32	-9.75	▷ 0.01	5.26	-0.21	BC 15
				Min M_T	2.07	-0.49	-4.54	▷ -0.12	2.66	0.22	BC 20
				Max M_y	-3.37	0.08	-13.75	-0.00	▷ 12.12	-0.06	BC 23
				Min M_y	-16.05	0.11	30.63	-0.09	▷ -15.83	-0.54	BC 6
				Max M_z	-1.46	-1.35	-5.78	-0.07	3.86	▷ 1.29	BC 21
				Min M_z	3.16	1.18	-8.51	-0.04	4.04	▷ -1.27	BC 14
			3.870	Max N	▷ 2.64	-0.62	-3.60	-0.04	4.24	-0.83	BC 14
			Rechts	Min N	▷ -16.59	0.27	13.17	-0.02	-14.79	0.35	BC 9
				Max V_y	-1.52	▷ 0.47	-3.04	-0.07	3.91	0.77	BC 21
				Min V_y	2.64	▷ -0.62	-3.60	-0.04	4.24	-0.83	BC 14
				Max V_z	-14.20	-0.01	▷ 14.91	-0.06	-17.02	-0.04	BC 12
				Min V_z	-3.09	-0.02	▷ -9.67	-0.00	12.07	-0.03	BC 23
				Max M_T	-0.66	-0.07	-4.48	▷ 0.01	5.37	-0.09	BC 15
				Min M_T	1.78	-0.07	-2.16	▷ -0.12	2.79	0.03	BC 20
				Max M_y	-3.09	-0.02	-9.67	-0.00	▷ 12.07	-0.03	BC 23
				Min M_y	-14.20	-0.01	14.91	-0.06	▷ -17.02	-0.04	BC 12
				Max M_z	-1.52	0.47	-3.04	-0.07	3.91	▷ 0.77	BC 21
				Min M_z	2.64	-0.62	-3.60	-0.04	4.24	▷ -0.83	BC 14
			4.515	Max N	▷ 2.71	-0.64	-3.33	-0.04	1.96	-0.43	BC 14
			Links	Min N	▷ -16.19	0.27	11.46	-0.03	-6.71	0.17	BC 9
				Max V_y	-1.41	▷ 0.59	-3.05	-0.07	1.92	0.44	BC 21
				Min V_y	2.71	▷ -0.64	-3.33	-0.04	1.96	-0.43	BC 14
				Max V_z	-13.81	-0.03	▷ 13.19	-0.06	-7.83	-0.03	BC 12
				Min V_z	-2.99	-0.02	▷ -9.39	-0.00	5.87	-0.01	BC 23
				Max M_T	-0.55	-0.07	-4.20	▷ 0.01	2.52	-0.05	BC 15
				Min M_T	1.86	0.02	-2.18	▷ -0.12	1.37	0.06	BC 20
				Max M_y	-2.99	-0.02	-9.39	-0.00	▷ 5.87	-0.01	BC 23
				Min M_y	-11.01	-0.38	13.15	-0.08	▷ -7.90	-0.26	BC 6
				Max M_z	-1.41	0.59	-3.05	-0.07	1.92	▷ 0.44	BC 21
				Min M_z	2.71	-0.64	-3.33	-0.04	1.96	▷ -0.43	BC 14
			4.515	Max N	▷ 2.71	-0.64	-3.33	-0.04	1.96	-0.43	BC 14
			Rechts	Min N	▷ -16.19	0.27	11.46	-0.03	-6.71	0.17	BC 9
				Max V_y	-1.41	▷ 0.59	-3.05	-0.07	1.92	0.44	BC 21
				Min V_y	2.71	▷ -0.64	-3.33	-0.04	1.96	-0.43	BC 14
				Max V_z	-13.81	-0.03	▷ 13.19	-0.06	-7.83	-0.03	BC 12
				Min V_z	-2.99	-0.02	▷ -9.39	-0.00	5.87	-0.01	BC 23
				Max M_T	-0.55	-0.07	-4.20	▷ 0.01	2.52	-0.05	BC 15
				Min M_T	1.86	0.02	-2.18	▷ -0.12	1.37	0.06	BC 20
				Max M_y	-2.99	-0.02	-9.39	-0.00	▷ 5.87	-0.01	BC 23
				Min M_y	-11.01	-0.38	13.15	-0.08	▷ -7.90	-0.26	BC 6
				Max M_z	-1.41	0.59	-3.05	-0.07	1.92	▷ 0.44	BC 21
				Min M_z	2.71	-0.64	-3.33	-0.04	1.96	▷ -0.43	BC 14
			4.577	Max N	▷ 2.72	-0.65	-3.24	-0.04	1.75	-0.39	BC 14
			Links	Min N	▷ -16.12	0.27	11.19	-0.03	-6.00	0.16	BC 9
				Max V_y	-1.40	▷ 0.62	-3.03	-0.07	1.73	0.40	BC 21
				Min V_y	2.72	▷ -0.65	-3.24	-0.04	1.75	-0.39	BC 14
				Max V_z	-13.75	-0.03	▷ 12.92	-0.06	-7.01	-0.02	BC 12
				Min V_z	-2.97	-0.02	▷ -9.31	-0.00	5.28	-0.01	BC 23
				Max M_T	-0.54	-0.07	-4.12	▷ 0.01	2.26	-0.04	BC 15
				Min M_T	1.87	0.04	-2.16	▷ -0.12	1.23	0.06	BC 20
				Max M_y	-2.97	-0.02	-9.31	-0.00	▷ 5.28	-0.01	BC 23
				Min M_y	-10.97	-0.38	12.92	-0.08	▷ -7.09	-0.23	BC 6
				Max M_z	-1.40	0.62	-3.03	-0.07	1.73	▷ 0.40	BC 21
				Min M_z	2.72	-0.65	-3.24	-0.04	1.75	▷ -0.39	BC 14
			4.577	Max N	▷ 2.72	-0.65	-3.24	-0.04	1.75	-0.39	BC 14
			Rechts	Min N	▷ -16.12	0.27	11.19	-0.03	-6.00	0.16	BC 9

4.12 DOORSNEDES - SNEDEKRACHTEN

Resultaatcombinaties

Staaf No.	RC	Knoop No.	Snede x [m]		Krachten [kN] N	V_y	V_z	Momenten [kNm] M_T	M_y	M_z	Bijbehorend Belastingsgeval
189	RC1			Max V_y	-1.40	▷ 0.62	-3.03	-0.07	1.73	0.40	BC 21
				Min V_y	2.72	▷ -0.65	-3.24	-0.04	1.75	-0.39	BC 14
				Max V_z	-13.75	-0.03	▷ 12.92	-0.06	-7.01	-0.02	BC 12
				Min V_z	-2.97	-0.02	▷ -9.31	-0.00	5.28	-0.01	BC 23
				Max M_T	-0.54	-0.07	-4.12	▷ 0.01	2.26	-0.04	BC 15
				Min M_T	1.87	0.04	-2.16	▷ -0.12	1.23	0.06	BC 20
				Max M_y	-2.97	-0.02	-9.31	-0.00	▷ 5.28	-0.01	BC 23
				Min M_y	-10.97	-0.38	12.92	-0.08	▷ -7.09	-0.23	BC 6
				Max M_z	-1.40	0.62	-3.03	-0.07	1.73	▷ 0.40	BC 21
				Min M_z	2.72	-0.65	-3.24	-0.04	1.75	▷ -0.39	BC 14
			5.123	Max N	▷ 2.79	-0.67	-2.92	-0.05	0.11	-0.03	BC 14
				Min N	▷ -15.80	0.27	9.79	-0.03	-0.36	0.01	BC 9
				Max V_y	-1.31	▷ 0.73	-2.98	-0.06	0.11	0.03	BC 21
				Min V_y	2.79	▷ -0.67	-2.92	-0.05	0.11	-0.03	BC 14
				Max V_z	-10.75	-0.41	▷ 11.73	-0.08	-0.43	-0.01	BC 6
				Min V_z	-2.88	-0.02	▷ -8.98	0.00	0.33	-0.00	BC 23
				Max M_T	-0.45	-0.07	-3.79	▷ 0.01	0.14	-0.00	BC 15
				Min M_T	1.93	0.13	-2.12	▷ -0.12	0.08	0.00	BC 20
				Max M_y	-2.88	-0.02	-8.98	0.00	▷ 0.33	-0.00	BC 23
				Min M_y	-10.75	-0.41	11.73	-0.08	▷ -0.43	-0.01	BC 6
				Max M_z	-1.31	0.73	-2.98	-0.06	0.11	▷ 0.03	BC 21
				Min M_z	2.79	-0.67	-2.92	-0.05	0.11	▷ -0.03	BC 14
			5.160	Max N	▷ 2.79	-0.67	-2.93	-0.05	0.00	-0.00	BC 14
			Links	Min N	▷ -15.79	0.27	9.76	-0.03	-0.00	0.00	BC 9
				Max V_y	-1.31	▷ 0.73	-2.99	-0.06	-0.00	-0.00	BC 21
				Min V_y	2.79	▷ -0.67	-2.93	-0.05	0.00	-0.00	BC 14
				Max V_z	-10.74	-0.41	▷ 11.70	-0.08	0.00	0.00	BC 6
				Min V_z	-2.88	-0.02	▷ -8.99	0.00	0.00	0.00	BC 23
				Max M_T	-0.45	-0.07	-3.80	▷ 0.01	0.00	0.00	BC 15
				Min M_T	1.94	0.13	-2.13	▷ -0.12	-0.00	-0.00	BC 20
				Max M_y	0.35	-0.62	-8.10	-0.05	▷ 0.00	-0.00	BC 22
				Min M_y	-12.96	0.13	9.13	-0.07	▷ -0.00	0.00	BC 10
				Max M_z	-10.74	-0.41	11.70	-0.08	-0.00	▷ 0.00	BC 6
				Min M_z	0.35	-0.62	-8.10	-0.05	0.00	▷ -0.00	BC 22
		164	5.160	Max N	▷ 2.79	-0.67	-2.93	-0.05	0.00	-0.00	BC 14
			Rechts	Min N	▷ -15.79	0.27	9.76	-0.03	-0.00	0.00	BC 9
				Max V_y	-1.31	▷ 0.73	-2.99	-0.06	-0.00	-0.00	BC 21
				Min V_y	2.79	▷ -0.67	-2.93	-0.05	0.00	-0.00	BC 14
				Max V_z	-10.74	-0.41	▷ 11.70	-0.08	0.00	0.00	BC 6
				Min V_z	-2.88	-0.02	▷ -8.99	0.00	0.00	0.00	BC 23
				Max M_T	-0.45	-0.07	-3.80	▷ 0.01	-0.00	0.00	BC 15
				Min M_T	1.94	0.13	-2.13	▷ -0.12	-0.00	-0.00	BC 20
				Max M_y	-5.53	-0.53	8.17	-0.06	▷ 0.00	0.00	BC 18
				Min M_y	-1.31	0.73	-2.99	-0.06	▷ -0.00	-0.00	BC 21
				Max M_z	-10.74	-0.41	11.70	-0.08	0.00	▷ 0.00	BC 6
				Min M_z	0.35	-0.62	-8.10	-0.05	0.00	▷ -0.00	BC 22
198	RC1	34	0.000	Max N	▷ 5.62	-0.57	-16.81	-0.00	51.49	-1.13	BC 15
			Links	Min N	▷ -32.80	0.46	69.94	0.12	-210.26	1.18	BC 8
				Max V_y	-19.44	▷ 2.65	49.77	0.06	-149.96	5.51	BC 5
				Min V_y	2.36	▷ -3.41	-16.26	0.04	51.57	-6.00	BC 14
				Max V_z	-32.80	0.46	▷ 69.94	0.12	-210.26	1.18	BC 8
				Min V_z	5.62	-0.57	▷ -16.81	-0.00	51.49	-1.13	BC 15
				Max M_T	-26.07	-1.32	58.19	▷ 0.13	-178.09	-1.97	BC 2
				Min M_T	5.62	-0.57	-16.81	▷ -0.00	51.49	-1.13	BC 15
				Max M_y	2.36	-3.41	-16.26	0.04	▷ 51.57	-6.00	BC 14
				Min M_y	-31.12	1.90	69.67	0.08	▷ -210.31	3.68	BC 9
				Max M_z	-19.44	2.65	49.77	0.06	-149.96	▷ 5.51	BC 5
				Min M_z	2.36	-3.41	-16.26	0.04	51.57	▷ -6.00	BC 14
			0.000	Max N	▷ 5.62	-0.57	-16.81	-0.00	51.49	-1.13	BC 15
			Rechts	Min N	▷ -32.80	0.46	69.94	0.12	-210.26	1.18	BC 8
				Max V_y	-19.44	▷ 2.65	49.77	0.06	-149.96	5.51	BC 5
				Min V_y	2.36	▷ -3.41	-16.26	0.04	51.57	-6.00	BC 14
				Max V_z	-32.80	0.46	▷ 69.94	0.12	-210.26	1.18	BC 8
				Min V_z	5.62	-0.57	▷ -16.81	-0.00	51.49	-1.13	BC 15
				Max M_T	-26.07	-1.32	58.19	▷ 0.13	-178.09	-1.97	BC 2
				Min M_T	5.62	-0.57	-16.81	▷ -0.00	51.49	-1.13	BC 15
				Max M_y	2.36	-3.41	-16.26	0.04	▷ 51.57	-6.00	BC 14
				Min M_y	-31.12	1.90	69.67	0.08	▷ -210.30	3.68	BC 9
				Max M_z	-19.44	2.65	49.77	0.06	-149.96	▷ 5.51	BC 5
				Min M_z	2.36	-3.41	-16.26	0.04	51.57	▷ -6.00	BC 14
			0.645	Max N	▷ 5.72	-0.57	-16.72	-0.01	40.62	-0.76	BC 15
			Links	Min N	▷ -32.14	0.48	67.72	0.08	-165.69	0.88	BC 8
				Max V_y	-19.01	▷ 2.60	48.07	-0.00	-118.29	3.82	BC 5
				Min V_y	2.50	▷ -3.38	-16.16	0.02	41.06	-3.81	BC 14
				Max V_z	-32.14	0.48	▷ 67.72	0.08	-165.69	0.88	BC 8
				Min V_z	5.72	-0.57	▷ -16.72	-0.01	40.62	-0.76	BC 15
				Max M_T	-25.59	-1.29	56.37	▷ 0.14	-141.02	-1.12	BC 2
				Min M_T	5.72	-0.57	-16.72	▷ -0.01	40.62	-0.76	BC 15
				Max M_y	2.50	-3.38	-16.16	0.02	▷ 41.06	-3.81	BC 14
				Min M_y	-30.48	1.91	67.45	0.02	▷ -165.91	2.45	BC 9
				Max M_z	-19.01	2.60	48.07	-0.00	-118.29	▷ 3.82	BC 5
				Min M_z	2.50	-3.38	-16.16	0.02	41.06	▷ -3.81	BC 14
			0.645	Max N	▷ 5.72	-0.57	-16.72	-0.01	40.62	-0.76	BC 15
			Rechts	Min N	▷ -32.14	0.48	67.72	0.08	-165.69	0.88	BC 8

4.12 DOORSNEDES - SNEDEKRACHTEN

Resultaatcombinaties

Staaf No.	RC	Knoop No.	Snede x [m]		Krachten [kN] N	V_y	V_z	Momenten [kNm] M_T	M_y	M_z	Bijbehorend Belastingsgeval
198	RC1			Max V_y	-19.01	▷ 2.60	48.07	-0.00	-118.29	3.82	BC 5
				Min V_y	2.50	▷ -3.38	-16.16	0.02	41.06	-3.81	BC 14
				Max V_z	-32.14	0.48	▷ 67.72	0.08	-165.69	0.88	BC 8
				Min V_z	5.72	-0.57	▷ -16.72	-0.01	40.62	-0.76	BC 15
				Max M_T	-25.59	-1.29	56.37	▷ 0.14	-141.02	-1.12	BC 2
				Min M_T	5.72	-0.57	-16.72	▷ -0.01	40.62	-0.76	BC 15
				Max M_y	2.50	-3.38	-16.16	0.02	▷ 41.06	-3.81	BC 14
				Min M_y	-30.48	1.91	67.45	0.02	▷ -165.91	2.45	BC 9
				Max M_z	-19.01	2.60	48.07	-0.00	-118.29	▷ 3.82	BC 5
				Min M_z	2.50	-3.38	-16.16	0.02	41.06	▷ -3.81	BC 14
			0.707	Max N	▷ 5.73	-0.57	-16.65	-0.01	39.58	-0.73	BC 15
			Links	Min N	▷ -32.05	0.49	67.37	0.08	-161.48	0.85	BC 8
				Max V_y	-18.96	▷ 2.59	47.82	-0.00	-115.30	3.65	BC 5
				Min V_y	2.51	▷ -3.37	-16.10	0.02	40.06	-3.60	BC 14
				Max V_z	-32.05	0.49	▷ 67.37	0.08	-161.48	0.85	BC 8
				Min V_z	5.73	-0.57	▷ -16.65	-0.01	39.58	-0.73	BC 15
				Max M_T	-25.53	-1.28	56.09	▷ 0.14	-137.51	-1.04	BC 2
				Min M_T	5.73	-0.57	-16.65	▷ -0.01	39.58	-0.73	BC 15
				Max M_y	2.51	-3.37	-16.10	0.02	▷ 40.06	-3.60	BC 14
				Min M_y	-30.39	1.92	67.11	0.02	▷ -161.71	2.33	BC 9
				Max M_z	-18.96	2.59	47.82	-0.00	-115.30	▷ 3.65	BC 5
				Min M_z	2.51	-3.37	-16.10	0.02	40.06	▷ -3.60	BC 14
			0.707	Max N	▷ 5.73	-0.57	-16.65	-0.01	39.58	-0.73	BC 15
			Rechts	Min N	▷ -32.05	0.49	67.37	0.08	-161.48	0.85	BC 8
				Max V_y	-18.96	▷ 2.59	47.82	-0.00	-115.30	3.65	BC 5
				Min V_y	2.51	▷ -3.37	-16.10	0.02	40.05	-3.60	BC 14
				Max V_z	-32.05	0.49	▷ 67.37	0.08	-161.48	0.85	BC 8
				Min V_z	5.73	-0.57	▷ -16.65	-0.01	39.58	-0.73	BC 15
				Max M_T	-25.53	-1.28	56.09	▷ 0.14	-137.51	-1.04	BC 2
				Min M_T	5.73	-0.57	-16.65	▷ -0.01	39.58	-0.73	BC 15
				Max M_y	2.51	-3.37	-16.10	0.02	▷ 40.05	-3.60	BC 14
				Min M_y	-30.39	1.92	67.11	0.02	▷ -161.71	2.33	BC 9
				Max M_z	-18.96	2.59	47.82	-0.00	-115.30	▷ 3.65	BC 5
				Min M_z	2.51	-3.37	-16.10	0.02	40.05	▷ -3.60	BC 14
			1.290	Max N	▷ 5.82	-0.57	-16.50	-0.01	29.97	-0.40	BC 15
			Links	Min N	▷ -31.51	0.51	65.51	0.06	-122.87	0.56	BC 8
				Max V_y	-18.61	▷ 2.54	46.38	-0.02	-87.93	2.17	BC 5
				Min V_y	2.62	▷ -3.35	-15.94	0.02	30.77	-1.65	BC 14
				Max V_z	-31.51	0.51	▷ 65.51	0.06	-122.87	0.56	BC 8
				Min V_z	5.82	-0.57	▷ -16.50	-0.01	29.97	-0.40	BC 15
				Max M_T	-25.13	-1.26	54.53	▷ 0.13	-105.37	-0.30	BC 2
				Min M_T	-28.24	2.41	61.45	▷ -0.02	-114.15	1.81	BC 11
				Max M_y	2.62	-3.35	-15.94	0.02	▷ 30.77	-1.65	BC 14
				Min M_y	-29.86	1.93	65.24	-0.01	▷ -123.27	1.22	BC 9
				Max M_z	4.29	2.12	-5.79	0.07	13.97	▷ 2.30	BC 21
				Min M_z	2.62	-3.35	-15.94	0.02	30.77	▷ -1.65	BC 14
			1.290	Max N	▷ 5.37	-0.30	-12.64	-0.01	30.14	-0.48	BC 15
			Rechts	Min N	▷ -27.46	0.20	52.99	0.07	-123.77	0.67	BC 8
				Max V_y	4.21	▷ 2.14	-5.31	0.08	14.16	2.69	BC 21
				Min V_y	2.60	▷ -1.80	-12.17	0.02	30.77	-2.05	BC 14
				Max V_z	-27.46	0.20	▷ 52.99	0.07	-123.77	0.67	BC 8
				Min V_z	5.37	-0.30	▷ -12.64	-0.01	30.14	-0.48	BC 15
				Max M_T	-22.28	-0.73	44.76	▷ 0.13	-106.03	-0.40	BC 2
				Min M_T	-24.42	1.48	49.31	▷ -0.02	-114.92	2.17	BC 11
				Max M_y	2.60	-1.80	-12.17	0.02	▷ 30.77	-2.05	BC 14
				Min M_y	-26.03	0.96	52.76	-0.01	▷ -124.08	1.49	BC 9
				Max M_z	4.21	2.14	-5.31	0.08	14.16	▷ 2.69	BC 21
				Min M_z	2.60	-1.80	-12.17	0.02	30.77	▷ -2.05	BC 14
			1.935	Max N	▷ 5.46	-0.30	-12.49	-0.01	21.98	-0.29	BC 15
			Links	Min N	▷ -26.89	0.22	50.94	0.05	-90.09	0.54	BC 8
				Max V_y	4.29	▷ 2.02	-5.45	0.08	10.67	1.33	BC 21
				Min V_y	2.71	▷ -1.77	-12.02	0.02	22.92	-0.90	BC 14
				Max V_z	-26.89	0.22	▷ 50.94	0.05	-90.09	0.54	BC 8
				Min V_z	5.46	-0.30	▷ -12.49	-0.01	21.98	-0.29	BC 15
				Max M_T	-21.87	-0.70	43.07	▷ 0.12	-77.58	0.07	BC 2
				Min M_T	-23.88	1.46	47.32	▷ -0.02	-83.61	1.22	BC 11
				Max M_y	2.71	-1.77	-12.02	0.02	▷ 22.92	-0.90	BC 14
				Min M_y	-25.48	0.96	50.71	-0.01	▷ -90.55	0.87	BC 9
				Max M_z	-15.85	1.77	35.83	-0.01	-64.63	▷ 1.40	BC 5
				Min M_z	2.71	-1.77	-12.02	0.02	22.92	▷ -0.90	BC 14
			1.935	Max N	▷ 5.46	-0.30	-12.49	-0.01	21.98	-0.29	BC 15
			Rechts	Min N	▷ -26.89	0.22	50.94	0.05	-90.09	0.54	BC 8
				Max V_y	4.29	▷ 2.02	-5.45	0.08	10.67	1.33	BC 21
				Min V_y	2.71	▷ -1.77	-12.02	0.02	22.92	-0.90	BC 14
				Max V_z	-26.89	0.22	▷ 50.94	0.05	-90.09	0.54	BC 8
				Min V_z	5.46	-0.30	▷ -12.49	-0.01	21.98	-0.29	BC 15
				Max M_T	-21.87	-0.70	43.07	▷ 0.12	-77.58	0.07	BC 2
				Min M_T	-23.88	1.46	47.32	▷ -0.02	-83.61	1.22	BC 11
				Max M_y	2.71	-1.77	-12.02	0.02	▷ 22.92	-0.90	BC 14
				Min M_y	-25.48	0.96	50.71	-0.01	▷ -90.55	0.87	BC 9
				Max M_z	-15.85	1.77	35.83	-0.01	-64.63	▷ 1.40	BC 5
				Min M_z	2.71	-1.77	-12.02	0.02	22.92	▷ -0.90	BC 14
			1.997	Max N	▷ 5.47	-0.30	-12.42	-0.01	21.20	-0.27	BC 15
			Links	Min N	▷ -26.81	0.22	50.62	0.05	-86.92	0.53	BC 8

4.12 DOORSNEDES - SNEDEKRACHTEN

Resultaatcombinaties

Staaf No.	RC	Knoop No.	Snede x [m]		Krachten [kN] N	V_y	V_z	Momenten [kNm] M_T	M_y	M_z	Bijbehorend Belastingsgeval
198	RC1			Max V_y	4.30	▷ 1.99	-5.44	0.08	10.33	1.21	BC 21
				Min V_y	2.72	▷ -1.77	-11.94	0.02	22.17	-0.79	BC 14
				Max V_z	-26.81	0.22	▷ 50.62	0.05	-86.92	0.53	BC 8
				Min V_z	5.47	-0.30	▷ -12.42	-0.01	21.20	-0.27	BC 15
				Max M_T	1.54	0.53	-4.95	▷ 0.12	11.29	0.68	BC 20
				Min M_T	-23.81	1.45	47.02	▷ -0.02	-80.67	1.13	BC 11
				Max M_y	2.72	-1.77	-11.94	0.02	▷ 22.17	-0.79	BC 14
				Min M_y	-25.40	0.97	50.39	-0.01	▷ -87.40	0.81	BC 9
				Max M_z	-15.80	1.76	35.60	-0.01	-62.40	▷ 1.29	BC 5
				Min M_z	2.72	-1.77	-11.94	0.02	22.17	▷ -0.79	BC 14
			1.997	Max N	▷ 5.47	-0.30	-12.42	-0.01	21.20	-0.27	BC 15
			Rechts	Min N	▷ -26.81	0.22	50.62	0.05	-86.92	0.53	BC 8
				Max V_y	4.30	▷ 1.99	-5.44	0.08	10.33	1.21	BC 21
				Min V_y	2.72	▷ -1.77	-11.94	0.02	22.17	-0.79	BC 14
				Max V_z	-26.81	0.22	▷ 50.62	0.05	-86.92	0.53	BC 8
				Min V_z	5.47	-0.30	▷ -12.42	-0.01	21.20	-0.27	BC 15
				Max M_T	1.54	0.53	-4.95	▷ 0.12	11.29	0.68	BC 20
				Min M_T	-23.81	1.45	47.02	▷ -0.02	-80.66	1.13	BC 11
				Max M_y	2.72	-1.77	-11.94	0.02	▷ 22.17	-0.79	BC 14
				Min M_y	-25.40	0.97	50.39	-0.01	▷ -87.40	0.81	BC 9
				Max M_z	-15.80	1.76	35.60	-0.01	-62.40	▷ 1.29	BC 5
				Min M_z	2.72	-1.77	-11.94	0.02	22.17	▷ -0.79	BC 14
			2.580	Max N	▷ 5.54	-0.30	-12.22	-0.01	14.07	-0.09	BC 15
			Links	Min N	▷ -26.35	0.24	48.90	0.05	-58.03	0.40	BC 8
				Max V_y	4.37	▷ 1.88	-5.52	0.07	7.16	0.09	BC 21
				Min V_y	2.82	▷ -1.74	-11.73	0.03	15.32	0.23	BC 14
				Max V_z	-26.35	0.24	▷ 48.90	0.05	-58.03	0.40	BC 8
				Min V_z	5.54	-0.30	▷ -12.22	-0.01	14.07	-0.09	BC 15
				Max M_T	1.64	0.44	-5.03	▷ 0.12	8.40	0.41	BC 20
				Min M_T	5.54	-0.30	-12.22	▷ -0.01	14.07	-0.09	BC 15
				Max M_y	2.82	-1.74	-11.73	0.03	▷ 15.32	0.23	BC 14
				Min M_y	-24.95	0.97	48.67	-0.00	▷ -58.64	0.25	BC 9
				Max M_z	-18.28	0.25	34.76	0.09	-40.89	▷ 0.59	BC 4
				Min M_z	5.54	-0.30	-12.22	-0.01	14.07	▷ -0.09	BC 15
			2.580	Max N	▷ 5.23	-0.32	-9.27	-0.01	14.33	-0.21	BC 15
			Rechts	Min N	▷ -22.19	0.59	37.03	0.05	-59.22	0.59	BC 8
				Max V_y	-13.10	▷ 1.63	26.02	0.01	-42.74	0.85	BC 5
				Min V_y	2.98	▷ -1.24	-9.06	0.03	15.41	-0.29	BC 14
				Max V_z	-22.19	0.59	▷ 37.03	0.05	-59.22	0.59	BC 8
				Min V_z	5.23	-0.32	▷ -9.27	-0.01	14.33	-0.21	BC 15
				Max M_T	1.88	0.70	-4.46	▷ 0.12	8.48	0.56	BC 20
				Min M_T	5.23	-0.32	-9.27	▷ -0.01	14.33	-0.21	BC 15
				Max M_y	2.98	-1.24	-9.06	0.03	▷ 15.41	-0.29	BC 14
				Min M_y	-21.03	1.06	36.92	-0.00	▷ -59.75	0.64	BC 9
				Max M_z	-13.10	1.63	26.02	0.01	-42.74	▷ 0.85	BC 5
				Min M_z	2.98	-1.24	-9.06	0.03	15.41	▷ -0.29	BC 14
			3.225	Max N	▷ 5.30	-0.32	-9.06	-0.01	8.36	0.00	BC 15
			Links	Min N	▷ -21.71	0.61	35.15	0.05	-35.79	0.20	BC 8
				Max V_y	-12.79	▷ 1.58	24.61	0.02	-26.32	-0.19	BC 5
				Min V_y	3.07	▷ -1.21	-8.85	0.03	9.58	0.50	BC 14
				Max V_z	-21.71	0.61	▷ 35.15	0.05	-35.79	0.20	BC 8
				Min V_z	5.30	-0.32	▷ -9.06	-0.01	8.36	0.00	BC 15
				Max M_T	1.97	0.61	-4.53	▷ 0.12	5.56	0.13	BC 20
				Min M_T	5.30	-0.32	-9.06	▷ -0.01	8.36	0.00	BC 15
				Max M_y	3.07	-1.21	-8.85	0.03	▷ 9.58	0.50	BC 14
				Min M_y	-20.56	1.06	35.04	0.01	▷ -36.39	-0.05	BC 9
				Max M_z	3.07	-1.21	-8.85	0.03	9.58	▷ 0.50	BC 14
				Min M_z	4.21	1.49	-4.75	0.07	4.34	▷ -0.37	BC 21
			3.225	Max N	▷ 5.30	-0.32	-9.06	-0.01	8.36	0.00	BC 15
			Rechts	Min N	▷ -21.71	0.61	35.15	0.05	-35.79	0.20	BC 8
				Max V_y	-12.79	▷ 1.58	24.61	0.02	-26.32	-0.19	BC 5
				Min V_y	3.07	▷ -1.21	-8.85	0.03	9.58	0.50	BC 14
				Max V_z	-21.71	0.61	▷ 35.15	0.05	-35.79	0.20	BC 8
				Min V_z	5.30	-0.32	▷ -9.06	-0.01	8.36	0.00	BC 15
				Max M_T	1.97	0.61	-4.53	▷ 0.12	5.56	0.13	BC 20
				Min M_T	5.30	-0.32	-9.06	▷ -0.01	8.36	0.00	BC 15
				Max M_y	3.07	-1.21	-8.85	0.03	▷ 9.58	0.50	BC 14
				Min M_y	-20.56	1.06	35.04	0.01	▷ -36.39	-0.05	BC 9
				Max M_z	3.07	-1.21	-8.85	0.03	9.58	▷ 0.50	BC 14
				Min M_z	4.21	1.49	-4.75	0.07	4.34	▷ -0.37	BC 21
			3.287	Max N	▷ 5.31	-0.32	-8.99	-0.01	7.80	0.02	BC 15
			Links	Min N	▷ -21.64	0.61	34.86	0.05	-33.61	0.16	BC 8
				Max V_y	-12.74	▷ 1.56	24.39	0.02	-24.79	-0.28	BC 5
				Min V_y	3.08	▷ -1.20	-8.77	0.03	9.03	0.58	BC 14
				Max V_z	-21.64	0.61	▷ 34.86	0.05	-33.61	0.16	BC 8
				Min V_z	5.31	-0.32	▷ -8.99	-0.01	7.80	0.02	BC 15
				Max M_T	1.99	0.59	-4.51	▷ 0.12	5.27	0.09	BC 20
				Min M_T	5.31	-0.32	-8.99	▷ -0.01	7.80	0.02	BC 15
				Max M_y	3.08	-1.20	-8.77	0.03	▷ 9.03	0.58	BC 14
				Min M_y	-20.50	1.06	34.75	0.01	▷ -34.21	-0.11	BC 9
				Max M_z	3.08	-1.20	-8.77	0.03	9.03	▷ 0.58	BC 14
				Min M_z	4.22	1.47	-4.73	0.07	4.05	▷ -0.47	BC 21
			3.287	Max N	▷ 5.31	-0.32	-8.99	-0.01	7.80	0.02	BC 15
			Rechts	Min N	▷ -21.64	0.61	34.86	0.05	-33.61	0.16	BC 8

4.12 DOORSNEDES - SNEDEKRACHTEN

Resultaatcombinaties

Staaf No.	RC	Knoop No.	Snede x [m]		Krachten [kN] N	V_y	V_z	Momenten [kNm] M_T	M_y	M_z	Bijbehorend Belastingsgeval
198	RC1			Max V_y	-12.74	▷ 1.56	24.39	0.02	-24.79	-0.28	BC 5
				Min V_y	3.08	▷ -1.20	-8.77	0.03	9.03	0.58	BC 14
				Max V_z	-21.64	0.61	▷ 34.86	0.05	-33.61	0.16	BC 8
				Min V_z	5.31	-0.32	▷ -8.99	-0.01	7.80	0.02	BC 15
				Max M_T	1.99	0.59	-4.51	▷ 0.12	5.27	0.09	BC 20
				Min M_T	5.31	-0.32	-8.99	▷ -0.01	7.80	0.02	BC 15
				Max M_y	3.08	-1.20	-8.77	0.03	▷ 9.03	0.58	BC 14
				Min M_y	-20.50	1.06	34.75	0.01	▷ -34.21	-0.11	BC 9
				Max M_z	3.08	-1.20	-8.77	0.03	9.03	▷ 0.58	BC 14
				Min M_z	4.22	1.47	-4.73	0.07	4.05	▷ -0.47	BC 21
			3.870	Max N	▷ 5.36	-0.32	-8.73	-0.01	2.68	0.21	BC 15
			Links	Min N	▷ -21.26	0.63	33.28	0.05	-13.86	-0.20	BC 8
				Max V_y	-12.50	▷ 1.51	23.19	0.03	-11.00	-1.17	BC 5
				Min V_y	3.16	▷ -1.18	-8.51	0.04	4.04	1.27	BC 14
				Max V_z	-21.26	0.63	▷ 33.28	0.05	-13.86	-0.20	BC 8
				Min V_z	5.36	-0.32	▷ -8.73	-0.01	2.68	0.21	BC 15
				Max M_T	2.07	0.49	-4.54	▷ 0.12	2.66	-0.22	BC 20
				Min M_T	5.36	-0.32	-8.73	▷ -0.01	2.68	0.21	BC 15
				Max M_y	3.16	-1.18	-8.51	0.04	▷ 4.04	1.27	BC 14
				Min M_y	-20.13	1.06	33.17	0.01	▷ -14.53	-0.73	BC 9
				Max M_z	3.16	-1.18	-8.51	0.04	4.04	▷ 1.27	BC 14
				Min M_z	4.27	1.35	-4.76	0.06	1.30	▷ -1.28	BC 21
			3.870	Max N	▷ 4.15	0.07	-2.66	-0.01	3.04	0.09	BC 15
			Rechts	Min N	▷ -14.90	-0.00	13.61	0.06	-15.35	0.02	BC 8
				Max V_y	2.64	▷ 0.62	-3.60	0.04	4.24	0.83	BC 14
				Min V_y	3.30	▷ -0.47	-1.23	0.07	1.59	-0.76	BC 21
				Max V_z	-14.11	-0.27	▷ 14.07	0.02	-15.94	-0.35	BC 9
				Min V_z	2.64	0.62	▷ -3.60	0.04	4.24	0.83	BC 14
				Max M_T	1.78	0.07	-2.16	▷ 0.12	2.79	-0.03	BC 20
				Min M_T	4.15	0.07	-2.66	▷ -0.01	3.04	0.09	BC 15
				Max M_y	2.64	0.62	-3.60	0.04	▷ 4.24	0.83	BC 14
				Min M_y	-14.11	-0.27	14.07	0.02	▷ -15.94	-0.35	BC 9
				Max M_z	2.64	0.62	-3.60	0.04	4.24	▷ 0.83	BC 14
				Min M_z	3.30	-0.47	-1.23	0.07	1.59	▷ -0.76	BC 21
			4.515	Max N	▷ 4.20	0.07	-2.39	-0.01	1.36	0.05	BC 15
			Links	Min N	▷ -14.51	0.02	11.89	0.06	-6.99	0.02	BC 8
				Max V_y	2.71	▷ 0.64	-3.33	0.04	1.96	0.43	BC 14
				Min V_y	3.35	▷ -0.59	-1.25	0.07	0.77	-0.44	BC 21
				Max V_z	-13.73	-0.27	▷ 12.35	0.03	-7.28	-0.17	BC 9
				Min V_z	2.71	0.64	▷ -3.33	0.04	1.96	0.43	BC 14
				Max M_T	1.86	-0.02	-2.18	▷ 0.12	1.37	-0.06	BC 20
				Min M_T	4.20	0.07	-2.39	▷ -0.01	1.36	0.05	BC 15
				Max M_y	2.71	0.64	-3.33	0.04	▷ 1.96	0.43	BC 14
				Min M_y	-13.73	-0.27	12.35	0.03	▷ -7.28	-0.17	BC 9
				Max M_z	2.71	0.64	-3.33	0.04	1.96	▷ 0.43	BC 14
				Min M_z	3.35	-0.59	-1.25	0.07	0.77	▷ -0.44	BC 21
			4.515	Max N	▷ 4.20	0.07	-2.39	-0.01	1.36	0.05	BC 15
			Rechts	Min N	▷ -14.51	0.02	11.89	0.06	-6.99	0.02	BC 8
				Max V_y	2.71	▷ 0.64	-3.33	0.04	1.96	0.43	BC 14
				Min V_y	3.35	▷ -0.59	-1.25	0.07	0.77	-0.44	BC 21
				Max V_z	-13.73	-0.27	▷ 12.35	0.03	-7.28	-0.17	BC 9
				Min V_z	2.71	0.64	▷ -3.33	0.04	1.96	0.43	BC 14
				Max M_T	1.86	-0.02	-2.18	▷ 0.12	1.37	-0.06	BC 20
				Min M_T	4.20	0.07	-2.39	▷ -0.01	1.36	0.05	BC 15
				Max M_y	2.71	0.64	-3.33	0.04	▷ 1.96	0.43	BC 14
				Min M_y	-13.73	-0.27	12.35	0.03	▷ -7.28	-0.17	BC 9
				Max M_z	2.71	0.64	-3.33	0.04	1.96	▷ 0.43	BC 14
				Min M_z	3.35	-0.59	-1.25	0.07	0.77	▷ -0.44	BC 21
			4.577	Max N	▷ 4.21	0.07	-2.31	-0.01	1.21	0.04	BC 15
			Links	Min N	▷ -14.45	0.02	11.62	0.06	-6.26	0.02	BC 8
				Max V_y	2.72	▷ 0.65	-3.24	0.04	1.75	0.39	BC 14
				Min V_y	3.35	▷ -0.61	-1.23	0.07	0.69	-0.40	BC 21
				Max V_z	-13.67	-0.27	▷ 12.08	0.03	-6.52	-0.16	BC 9
				Min V_z	2.72	0.65	▷ -3.24	0.04	1.75	0.39	BC 14
				Max M_T	1.87	-0.04	-2.16	▷ 0.12	1.23	-0.06	BC 20
				Min M_T	4.21	0.07	-2.31	▷ -0.01	1.21	0.04	BC 15
				Max M_y	2.72	0.65	-3.24	0.04	▷ 1.75	0.39	BC 14
				Min M_y	-13.67	-0.27	12.08	0.03	▷ -6.52	-0.16	BC 9
				Max M_z	2.72	0.65	-3.24	0.04	1.75	▷ 0.39	BC 14
				Min M_z	3.35	-0.61	-1.23	0.07	0.69	▷ -0.40	BC 21
			4.577	Max N	▷ 4.21	0.07	-2.31	-0.01	1.21	0.04	BC 15
			Rechts	Min N	▷ -14.45	0.02	11.62	0.06	-6.25	0.02	BC 8
				Max V_y	2.72	▷ 0.65	-3.24	0.04	1.75	0.39	BC 14
				Min V_y	3.35	▷ -0.61	-1.23	0.07	0.69	-0.40	BC 21
				Max V_z	-13.67	-0.27	▷ 12.08	0.03	-6.52	-0.16	BC 9
				Min V_z	2.72	0.65	▷ -3.24	0.04	1.75	0.39	BC 14
				Max M_T	1.87	-0.04	-2.16	▷ 0.12	1.23	-0.06	BC 20
				Min M_T	4.21	0.07	-2.31	▷ -0.01	1.21	0.04	BC 15
				Max M_y	2.72	0.65	-3.24	0.04	▷ 1.75	0.39	BC 14
				Min M_y	-13.67	-0.27	12.08	0.03	▷ -6.52	-0.16	BC 9
				Max M_z	2.72	0.65	-3.24	0.04	1.75	▷ 0.39	BC 14
				Min M_z	3.35	-0.61	-1.23	0.07	0.69	▷ -0.40	BC 21
			5.123	Max N	▷ 4.24	0.07	-2.00	-0.01	0.07	0.00	BC 15
				Min N	▷ -14.14	0.03	10.22	0.06	-0.38	0.00	BC 8

4.12 DOORSNEDES - SNEDEKRACHTEN

Resultaatcombinaties

Staaf No.	RC	Knoop No.	Snede x [m]		Krachten [kN] N	V_y	V_z	Momenten [kNm] M_T	M_y	M_z	Bijbehorend Belastingsgeval
198	RC1			Max V_y	2.79	▷ 0.67	-2.92	0.05	0.11	0.03	BC 14
				Min V_y	3.39	▷ -0.73	-1.20	0.06	0.04	-0.03	BC 21
				Max V_z	-13.37	-0.27	▷ 10.67	0.03	-0.40	-0.01	BC 9
				Min V_z	2.79	0.67	▷ -2.92	0.05	0.11	0.03	BC 14
				Max M_T	1.93	-0.13	-2.12	▷ 0.12	0.08	-0.00	BC 20
				Min M_T	4.24	0.07	-2.00	▷ -0.01	0.07	0.00	BC 15
				Max M_y	2.79	0.67	-2.92	0.05	▷ 0.11	0.03	BC 14
				Min M_y	-13.37	-0.27	10.67	0.03	▷ -0.40	-0.01	BC 9
				Max M_z	2.79	0.67	-2.92	0.05	0.11	▷ 0.03	BC 14
				Min M_z	3.39	-0.73	-1.20	0.06	0.04	▷ -0.03	BC 21
			5.160	Max N	▷ 4.25	0.07	-2.01	-0.01	0.00	-0.00	BC 15
			Links	Min N	▷ -14.13	0.03	10.19	0.06	-0.00	-0.00	BC 8
				Max V_y	2.79	▷ 0.67	-2.93	0.05	0.00	0.00	BC 14
				Min V_y	3.40	▷ -0.73	-1.21	0.06	-0.00	-0.00	BC 21
				Max V_z	-13.36	-0.27	▷ 10.65	0.03	-0.00	-0.00	BC 9
				Min V_z	2.79	0.67	▷ -2.93	0.05	0.00	0.00	BC 14
				Max M_T	1.94	-0.13	-2.13	▷ 0.12	-0.00	0.00	BC 20
				Min M_T	4.25	0.07	-2.01	▷ -0.01	0.00	-0.00	BC 15
				Max M_y	2.79	0.67	-2.93	0.05	▷ 0.00	0.00	BC 14
				Min M_y	-8.27	-0.55	7.91	0.05	▷ -0.00	-0.00	BC 5
				Max M_z	1.94	-0.13	-2.13	0.12	-0.00	▷ 0.00	BC 20
				Min M_z	-9.78	0.05	7.00	0.11	-0.00	▷ -0.00	BC 4
		35	5.160	Max N	▷ 4.25	0.07	-2.01	-0.01	-0.00	-0.00	BC 15
			Rechts	Min N	▷ -14.13	0.03	10.19	0.06	-0.00	-0.00	BC 8
				Max V_y	2.79	▷ 0.67	-2.93	0.05	0.00	0.00	BC 14
				Min V_y	3.40	▷ -0.73	-1.21	0.06	-0.00	-0.00	BC 21
				Max V_z	-13.36	-0.27	▷ 10.65	0.03	-0.00	-0.00	BC 9
				Min V_z	2.79	0.67	▷ -2.93	0.05	0.00	0.00	BC 14
				Max M_T	1.94	-0.13	-2.13	▷ 0.12	-0.00	0.00	BC 20
				Min M_T	4.25	0.07	-2.01	▷ -0.01	-0.00	-0.00	BC 15
				Max M_y	-0.21	0.62	7.25	0.05	▷ 0.00	-0.00	BC 22
				Min M_y	3.40	-0.73	-1.21	0.06	▷ -0.00	-0.00	BC 21
				Max M_z	1.94	-0.13	-2.13	0.12	-0.00	▷ 0.00	BC 20
				Min M_z	-9.78	0.05	7.00	0.11	-0.00	▷ -0.00	BC 4
199	RC1	44	0.000	Max N	▷ 5.62	0.57	-16.81	0.00	51.49	1.13	BC 15
			Links	Min N	▷ -32.57	-3.33	69.77	-0.04	-209.41	-6.17	BC 8
				Max V_y	-1.01	▷ 2.72	-0.84	0.06	-5.38	5.90	BC 21
				Min V_y	-25.62	▷ -4.41	57.85	0.01	-176.36	-7.98	BC 2
				Max V_z	-32.57	-3.33	▷ 69.77	-0.04	-209.41	-6.17	BC 8
				Min V_z	5.62	0.57	▷ -16.81	0.00	51.49	1.13	BC 15
				Max M_T	-3.84	-0.10	-0.64	▷ 0.11	-3.57	1.04	BC 20
				Min M_T	-31.12	-1.90	69.68	▷ -0.08	-210.33	-3.68	BC 9
				Max M_y	2.82	-2.25	-16.61	0.05	▷ 53.31	-3.70	BC 14
				Min M_y	-31.12	-1.90	69.68	-0.08	▷ -210.33	-3.68	BC 9
				Max M_z	-1.01	2.72	-0.84	0.06	-5.38	▷ 5.90	BC 21
				Min M_z	-25.62	-4.41	57.85	0.01	-176.36	▷ -7.98	BC 2
			0.000	Max N	▷ 5.62	0.57	-16.81	0.00	51.49	1.13	BC 15
			Rechts	Min N	▷ -32.57	-3.33	69.77	-0.04	-209.41	-6.17	BC 8
				Max V_y	-1.01	▷ 2.72	-0.84	0.06	-5.38	5.90	BC 21
				Min V_y	-25.62	▷ -4.41	57.85	0.01	-176.36	-7.98	BC 2
				Max V_z	-32.57	-3.33	▷ 69.77	-0.04	-209.41	-6.17	BC 8
				Min V_z	5.62	0.57	▷ -16.81	0.00	51.49	1.13	BC 15
				Max M_T	-3.84	-0.10	-0.64	▷ 0.11	-3.57	1.04	BC 20
				Min M_T	-31.12	-1.90	69.68	▷ -0.08	-210.33	-3.68	BC 9
				Max M_y	2.82	-2.25	-16.61	0.05	▷ 53.31	-3.70	BC 14
				Min M_y	-31.12	-1.90	69.68	-0.08	▷ -210.33	-3.68	BC 9
				Max M_z	-1.01	2.72	-0.84	0.06	-5.38	▷ 5.90	BC 21
				Min M_z	-25.62	-4.41	57.85	0.01	-176.36	▷ -7.98	BC 2
			0.645	Max N	▷ 5.73	0.57	-16.72	0.01	40.63	0.76	BC 15
			Links	Min N	▷ -31.92	-3.34	67.55	0.05	-164.94	-4.02	BC 8
				Max V_y	-0.91	▷ 2.60	-1.04	0.06	-6.01	4.18	BC 21
				Min V_y	-25.14	▷ -4.40	56.03	0.11	-139.50	-5.13	BC 2
				Max V_z	-31.92	-3.34	▷ 67.55	0.05	-164.94	-4.02	BC 8
				Min V_z	5.73	0.57	▷ -16.72	0.01	40.63	0.76	BC 15
				Max M_T	-23.10	-4.22	40.48	▷ 0.11	-94.47	-4.91	BC 6
				Min M_T	-21.54	-0.14	50.35	▷ -0.04	-130.04	0.27	BC 5
				Max M_y	2.95	-2.23	-16.51	0.04	▷ 42.58	-2.26	BC 14
				Min M_y	-30.48	-1.91	67.46	-0.02	▷ -165.93	-2.45	BC 9
				Max M_z	-0.91	2.60	-1.04	0.06	-6.01	▷ 4.18	BC 21
				Min M_z	-25.14	-4.40	56.03	0.11	-139.50	▷ -5.13	BC 2
			0.645	Max N	▷ 5.73	0.57	-16.72	0.01	40.63	0.76	BC 15
			Rechts	Min N	▷ -31.92	-3.34	67.55	0.05	-164.94	-4.02	BC 8
				Max V_y	-0.91	▷ 2.60	-1.04	0.06	-6.01	4.18	BC 21
				Min V_y	-25.14	▷ -4.40	56.03	0.11	-139.50	-5.13	BC 2
				Max V_z	-31.92	-3.34	▷ 67.55	0.05	-164.94	-4.02	BC 8
				Min V_z	5.73	0.57	▷ -16.72	0.01	40.63	0.76	BC 15
				Max M_T	-23.10	-4.22	40.48	▷ 0.11	-94.47	-4.91	BC 6
				Min M_T	-21.54	-0.14	50.35	▷ -0.04	-130.04	0.27	BC 5
				Max M_y	2.95	-2.23	-16.51	0.04	▷ 42.58	-2.26	BC 14
				Min M_y	-30.48	-1.91	67.46	-0.02	▷ -165.93	-2.45	BC 9
				Max M_z	-0.91	2.60	-1.04	0.06	-6.01	▷ 4.18	BC 21
				Min M_z	-25.14	-4.40	56.03	0.11	-139.50	▷ -5.13	BC 2
			0.707	Max N	▷ 5.73	0.57	-16.66	0.01	39.59	0.73	BC 15
			Links	Min N	▷ -31.83	-3.33	67.21	0.06	-160.74	-3.81	BC 8

4.12 DOORSNEDES - SNEDEKRACHTEN

Resultaatcombinaties

Staaf No.	RC	Knoop No.	Snede x [m]		Krachten [kN] N	V_y	V_z	Momenten [kNm] M_T	M_y	M_z	Bijbehorend Belastingsgeval
199	RC1			Max V_y	-0.90	▷ 2.58	-1.04	0.06	-6.07	4.01	BC 21
				Min V_y	-25.07	▷ -4.39	55.75	0.11	-136.02	-4.86	BC 2
				Max V_z	-31.83	-3.33	▷ 67.21	0.06	-160.74	-3.81	BC 8
				Min V_z	5.73	0.57	▷ -16.66	0.01	39.59	0.73	BC 15
				Max M_T	-23.04	-4.22	40.26	▷ 0.11	-91.96	-4.64	BC 6
				Min M_T	-21.48	-0.15	50.10	▷ -0.04	-126.91	0.28	BC 5
				Max M_y	2.96	-2.22	-16.45	0.04	▷ 41.55	-2.12	BC 14
				Min M_y	-30.39	-1.91	67.11	-0.02	▷ -161.73	-2.33	BC 9
				Max M_z	-0.90	2.58	-1.04	0.06	-6.07	▷ 4.01	BC 21
				Min M_z	-25.07	-4.39	55.75	0.11	-136.02	▷ -4.86	BC 2
			0.707	Max N	▷ 5.73	0.57	-16.66	0.01	39.59	0.73	BC 15
			Rechts	Min N	▷ -31.83	-3.33	67.21	0.06	-160.74	-3.81	BC 8
				Max V_y	-0.90	▷ 2.58	-1.04	0.06	-6.07	4.01	BC 21
				Min V_y	-25.07	▷ -4.39	55.75	0.11	-136.02	-4.86	BC 2
				Max V_z	-31.83	-3.33	▷ 67.21	0.06	-160.74	-3.81	BC 8
				Min V_z	5.73	0.57	▷ -16.66	0.01	39.59	0.73	BC 15
				Max M_T	-23.04	-4.22	40.26	▷ 0.11	-91.96	-4.64	BC 6
				Min M_T	-21.48	-0.15	50.10	▷ -0.04	-126.91	0.28	BC 5
				Max M_y	2.96	-2.22	-16.45	0.04	▷ 41.55	-2.12	BC 14
				Min M_y	-30.39	-1.91	67.11	-0.02	▷ -161.73	-2.33	BC 9
				Max M_z	-0.90	2.58	-1.04	0.06	-6.07	▷ 4.01	BC 21
				Min M_z	-25.07	-4.39	55.75	0.11	-136.02	▷ -4.86	BC 2
			1.290	Max N	▷ 5.82	0.57	-16.50	0.01	29.97	0.40	BC 15
			Links	Min N	▷ -31.29	-3.33	65.35	0.08	-122.23	-1.87	BC 8
				Max V_y	-0.82	▷ 2.46	-1.17	0.05	-6.70	2.56	BC 21
				Min V_y	-24.68	▷ -4.38	54.19	0.13	-104.08	-2.30	BC 2
				Max V_z	-31.29	-3.33	▷ 65.35	0.08	-122.23	-1.87	BC 8
				Min V_z	5.82	0.57	▷ -16.50	0.01	29.97	0.40	BC 15
				Max M_T	-24.68	-4.38	54.19	▷ 0.13	-104.08	-2.30	BC 2
				Min M_T	-21.12	-0.21	48.66	▷ -0.03	-98.22	0.40	BC 5
				Max M_y	3.08	-2.19	-16.29	0.04	▷ 32.06	-0.84	BC 14
				Min M_y	-29.87	-1.92	65.25	0.01	▷ -123.28	-1.22	BC 9
				Max M_z	-0.82	2.46	-1.17	0.05	-6.70	▷ 2.56	BC 21
				Min M_z	-24.68	-4.38	54.19	0.13	-104.08	▷ -2.30	BC 2
			1.290	Max N	▷ 5.37	0.30	-12.65	0.01	30.14	0.48	BC 15
			Rechts	Min N	▷ -27.23	-1.71	52.73	0.08	-123.11	-2.30	BC 8
				Max V_y	-1.19	▷ 2.32	1.33	0.06	-6.68	2.99	BC 21
				Min V_y	-21.82	▷ -2.30	44.24	0.13	-104.69	-2.85	BC 2
				Max V_z	-26.03	-0.96	▷ 52.76	0.01	-124.09	-1.49	BC 9
				Min V_z	3.06	-1.19	▷ -12.70	0.04	32.10	-1.08	BC 14
				Max M_T	-21.82	-2.30	44.24	▷ 0.13	-104.69	-2.85	BC 2
				Min M_T	-18.88	0.44	40.67	▷ -0.03	-98.72	0.40	BC 5
				Max M_y	3.06	-1.19	-12.70	0.04	▷ 32.10	-1.08	BC 14
				Min M_y	-26.03	-0.96	52.76	0.01	▷ -124.09	-1.49	BC 9
				Max M_z	-1.19	2.32	1.33	0.06	-6.68	▷ 2.99	BC 21
				Min M_z	-21.82	-2.30	44.24	0.13	-104.69	▷ -2.85	BC 2
			1.935	Max N	▷ 5.46	0.30	-12.49	0.01	21.98	0.29	BC 15
			Links	Min N	▷ -26.66	-1.71	50.68	0.08	-89.59	-1.20	BC 8
				Max V_y	-1.10	▷ 2.20	1.19	0.06	-5.89	1.52	BC 21
				Min V_y	-21.41	▷ -2.28	42.56	0.13	-76.58	-1.37	BC 2
				Max V_z	-25.48	-0.96	▷ 50.71	0.01	-90.56	-0.87	BC 9
				Min V_z	3.17	-1.16	▷ -12.54	0.04	23.91	-0.32	BC 14
				Max M_T	-21.41	-2.28	42.56	▷ 0.13	-76.58	-1.37	BC 2
				Min M_T	-18.50	0.38	39.12	▷ -0.02	-72.88	0.13	BC 5
				Max M_y	3.17	-1.16	-12.54	0.04	▷ 23.91	-0.32	BC 14
				Min M_y	-25.48	-0.96	50.71	0.01	▷ -90.56	-0.87	BC 9
				Max M_z	-1.10	2.20	1.19	0.06	-5.89	▷ 1.52	BC 21
				Min M_z	-21.41	-2.28	42.56	0.13	-76.58	▷ -1.37	BC 2
			1.935	Max N	▷ 5.46	0.30	-12.49	0.01	21.98	0.29	BC 15
			Rechts	Min N	▷ -26.66	-1.71	50.68	0.08	-89.59	-1.20	BC 8
				Max V_y	-1.10	▷ 2.20	1.19	0.06	-5.89	1.52	BC 21
				Min V_y	-21.41	▷ -2.28	42.56	0.13	-76.58	-1.37	BC 2
				Max V_z	-25.48	-0.96	▷ 50.71	0.01	-90.56	-0.87	BC 9
				Min V_z	3.17	-1.16	▷ -12.54	0.04	23.91	-0.32	BC 14
				Max M_T	-21.41	-2.28	42.56	▷ 0.13	-76.58	-1.37	BC 2
				Min M_T	-18.50	0.38	39.12	▷ -0.02	-72.88	0.13	BC 5
				Max M_y	3.17	-1.16	-12.54	0.04	▷ 23.91	-0.32	BC 14
				Min M_y	-25.48	-0.96	50.71	0.01	▷ -90.56	-0.87	BC 9
				Max M_z	-1.10	2.20	1.19	0.06	-5.89	▷ 1.52	BC 21
				Min M_z	-21.41	-2.28	42.56	0.13	-76.58	▷ -1.37	BC 2
			1.997	Max N	▷ 5.47	0.30	-12.43	0.01	21.21	0.27	BC 15
			Links	Min N	▷ -26.58	-1.71	50.36	0.08	-86.44	-1.09	BC 8
				Max V_y	-1.10	▷ 2.17	1.20	0.06	-5.81	1.39	BC 21
				Min V_y	-21.35	▷ -2.27	42.30	0.13	-73.93	-1.23	BC 2
				Max V_z	-25.40	-0.96	▷ 50.39	0.01	-87.41	-0.81	BC 9
				Min V_z	3.18	-1.16	▷ -12.47	0.04	23.13	-0.25	BC 14
				Max M_T	-21.35	-2.27	42.30	▷ 0.13	-73.93	-1.23	BC 2
				Min M_T	-18.45	0.37	38.88	▷ -0.02	-70.45	0.11	BC 5
				Max M_y	3.18	-1.16	-12.47	0.04	▷ 23.13	-0.25	BC 14
				Min M_y	-25.40	-0.96	50.39	0.01	▷ -87.41	-0.81	BC 9
				Max M_z	-1.10	2.17	1.20	0.06	-5.81	▷ 1.39	BC 21
				Min M_z	-21.35	-2.27	42.30	0.13	-73.93	▷ -1.23	BC 2
			1.997	Max N	▷ 5.47	0.30	-12.43	0.01	21.21	0.27	BC 15
			Rechts	Min N	▷ -26.58	-1.71	50.36	0.08	-86.44	-1.09	BC 8

4.12 DOORSNEDES - SNEDEKRACHTEN

Resultaatcombinaties

Staaf No.	RC	Knoop No.	Snede x [m]		Krachten [kN] N	V_y	V_z	Momenten [kNm] M_T	M_y	M_z	Bijbehorend Belastingsgeval
199	RC1			Max V_y	-1.10	▷ 2.17	1.20	0.06	-5.81	1.39	BC 21
				Min V_y	-21.35	▷ -2.27	42.30	0.13	-73.93	-1.23	BC 2
				Max V_z	-25.40	-0.96	▷ 50.39	0.01	-87.41	-0.81	BC 9
				Min V_z	3.18	-1.16	▷ -12.47	0.04	23.13	-0.25	BC 14
				Max M_T	-21.35	-2.27	42.30	▷ 0.13	-73.93	-1.23	BC 2
				Min M_T	-18.45	0.37	38.88	▷ -0.02	-70.45	0.11	BC 5
				Max M_y	3.18	-1.16	-12.47	0.04	▷ 23.13	-0.25	BC 14
				Min M_y	-25.40	-0.96	50.39	0.01	▷ -87.41	-0.81	BC 9
				Max M_z	-1.10	2.17	1.20	0.06	-5.81	▷ 1.39	BC 21
				Min M_z	-21.35	-2.27	42.30	0.13	-73.93	▷ -1.23	BC 2
			2.580	Max N	▷ 5.54	0.30	-12.22	0.01	14.07	0.09	BC 15
			Links	Min N	▷ -26.12	-1.70	48.65	0.06	-57.70	-0.10	BC 8
				Max V_y	-1.03	▷ 2.06	1.11	0.06	-5.12	0.17	BC 21
				Min V_y	-21.01	▷ -2.25	40.85	0.10	-49.79	0.09	BC 2
				Max V_z	-24.96	-0.97	▷ 48.67	0.00	-58.65	-0.25	BC 9
				Min V_z	3.28	-1.13	▷ -12.26	0.05	15.98	0.42	BC 14
				Max M_T	-3.31	0.62	1.08	▷ 0.11	-3.22	0.48	BC 20
				Min M_T	-18.15	0.31	37.57	▷ -0.01	-48.26	-0.08	BC 5
				Max M_y	3.28	-1.13	-12.26	0.05	▷ 15.98	0.42	BC 14
				Min M_y	-24.96	-0.97	48.67	0.00	▷ -58.65	-0.25	BC 9
				Max M_z	-3.31	0.62	1.08	0.11	-3.22	▷ 0.48	BC 20
				Min M_z	-24.96	-0.97	48.67	0.00	-58.65	▷ -0.25	BC 9
			2.580	Max N	▷ 5.23	0.32	-9.27	0.01	14.33	0.21	BC 15
			Rechts	Min N	▷ -21.99	-1.52	36.78	0.06	-58.86	-0.69	BC 8
				Max V_y	-0.93	▷ 1.81	1.88	0.06	-5.12	0.78	BC 21
				Min V_y	-18.00	▷ -1.79	31.26	0.10	-50.66	-0.62	BC 2
				Max V_z	-21.03	-1.06	▷ 36.93	0.00	-59.76	-0.64	BC 9
				Min V_z	3.39	-0.58	▷ -9.57	0.05	16.12	0.13	BC 14
				Max M_T	-2.79	0.90	1.59	▷ 0.12	-3.33	0.70	BC 20
				Min M_T	-15.59	0.11	29.27	▷ -0.01	-49.00	-0.07	BC 5
				Max M_y	3.39	-0.58	-9.57	0.05	▷ 16.12	0.13	BC 14
				Min M_y	-21.03	-1.06	36.93	0.00	▷ -59.76	-0.64	BC 9
				Max M_z	-0.93	1.81	1.88	0.06	-5.12	▷ 0.78	BC 21
				Min M_z	-21.99	-1.52	36.78	0.06	-58.86	▷ -0.69	BC 8
			3.225	Max N	▷ 5.30	0.32	-9.06	0.01	8.36	-0.00	BC 15
			Links	Min N	▷ -21.51	-1.51	34.90	0.04	-35.59	0.29	BC 8
				Max V_y	-0.86	▷ 1.69	1.79	0.06	-3.96	-0.36	BC 21
				Min V_y	-17.65	▷ -1.76	29.71	0.08	-30.88	0.53	BC 2
				Max V_z	-20.57	-1.06	▷ 35.05	-0.01	-36.40	0.05	BC 9
				Min V_z	3.49	-0.56	▷ -9.35	0.05	9.97	0.50	BC 14
				Max M_T	-2.70	0.81	1.51	▷ 0.12	-2.36	0.14	BC 20
				Min M_T	-13.93	-0.77	20.49	▷ -0.01	-19.62	0.02	BC 7
				Max M_y	3.49	-0.56	-9.35	0.05	▷ 9.97	0.50	BC 14
				Min M_y	-20.57	-1.06	35.05	-0.01	▷ -36.40	0.05	BC 9
				Max M_z	-17.65	-1.76	29.71	0.08	-30.88	▷ 0.53	BC 2
				Min M_z	-0.86	1.69	1.79	0.06	-3.96	▷ -0.36	BC 21
			3.225	Max N	▷ 5.30	0.32	-9.06	0.01	8.36	-0.00	BC 15
			Rechts	Min N	▷ -21.51	-1.51	34.90	0.04	-35.59	0.29	BC 8
				Max V_y	-0.86	▷ 1.69	1.79	0.06	-3.96	-0.36	BC 21
				Min V_y	-17.65	▷ -1.76	29.71	0.08	-30.88	0.53	BC 2
				Max V_z	-20.57	-1.06	▷ 35.05	-0.01	-36.40	0.05	BC 9
				Min V_z	3.49	-0.56	▷ -9.35	0.05	9.97	0.50	BC 14
				Max M_T	-2.70	0.81	1.51	▷ 0.12	-2.36	0.14	BC 20
				Min M_T	-13.93	-0.77	20.49	▷ -0.01	-19.62	0.02	BC 7
				Max M_y	3.49	-0.56	-9.35	0.05	▷ 9.97	0.50	BC 14
				Min M_y	-20.57	-1.06	35.05	-0.01	▷ -36.40	0.05	BC 9
				Max M_z	-17.65	-1.76	29.71	0.08	-30.88	▷ 0.53	BC 2
				Min M_z	-0.86	1.69	1.79	0.06	-3.96	▷ -0.36	BC 21
			3.287	Max N	▷ 5.31	0.32	-8.99	0.01	7.80	-0.02	BC 15
			Links	Min N	▷ -21.44	-1.51	34.61	0.04	-33.43	0.39	BC 8
				Max V_y	-0.85	▷ 1.67	1.81	0.06	-3.85	-0.46	BC 21
				Min V_y	-17.60	▷ -1.76	29.47	0.08	-29.04	0.64	BC 2
				Max V_z	-20.50	-1.06	▷ 34.75	-0.01	-34.22	0.11	BC 9
				Min V_z	3.50	-0.55	▷ -9.27	0.05	9.39	0.54	BC 14
				Max M_T	-2.69	0.79	1.53	▷ 0.12	-2.26	0.09	BC 20
				Min M_T	-13.89	-0.77	20.30	▷ -0.01	-18.35	0.07	BC 7
				Max M_y	3.50	-0.55	-9.27	0.05	▷ 9.39	0.54	BC 14
				Min M_y	-20.50	-1.06	34.75	-0.01	▷ -34.22	0.11	BC 9
				Max M_z	-17.60	-1.76	29.47	0.08	-29.04	▷ 0.64	BC 2
				Min M_z	-0.85	1.67	1.81	0.06	-3.85	▷ -0.46	BC 21
			3.287	Max N	▷ 5.31	0.32	-8.99	0.01	7.80	-0.02	BC 15
			Rechts	Min N	▷ -21.44	-1.51	34.61	0.04	-33.43	0.39	BC 8
				Max V_y	-0.85	▷ 1.67	1.81	0.06	-3.85	-0.46	BC 21
				Min V_y	-17.60	▷ -1.76	29.47	0.08	-29.04	0.64	BC 2
				Max V_z	-20.50	-1.06	▷ 34.75	-0.01	-34.22	0.11	BC 9
				Min V_z	3.50	-0.55	▷ -9.27	0.05	9.39	0.54	BC 14
				Max M_T	-2.69	0.79	1.53	▷ 0.12	-2.26	0.09	BC 20
				Min M_T	-13.89	-0.77	20.30	▷ -0.01	-18.35	0.07	BC 7
				Max M_y	3.50	-0.55	-9.27	0.05	▷ 9.39	0.54	BC 14
				Min M_y	-20.50	-1.06	34.75	-0.01	▷ -34.22	0.11	BC 9
				Max M_z	-17.60	-1.76	29.47	0.08	-29.04	▷ 0.64	BC 2
				Min M_z	-0.85	1.67	1.81	0.06	-3.85	▷ -0.46	BC 21
			3.870	Max N	▷ 5.37	0.32	-8.73	0.01	2.68	-0.21	BC 15
			Links	Min N	▷ -21.06	-1.49	33.03	0.02	-13.82	1.26	BC 8

4.12 DOORSNEDES - SNEDEKRACHTEN

Resultaatcombinaties

Staaf No.	RC	Knoop No.	Snede x [m]		Krachten [kN] N	V_y	V_z	Momenten [kNm] M_T	M_y	M_z	Bijbehorend Belastingsgeval
199	RC1			Max V_y	-0.80	▷ 1.55	1.78	0.06	-2.78	-1.39	BC 21
				Min V_y	-17.33	▷ -1.73	28.14	0.06	-12.34	1.65	BC 2
				Max V_z	-20.13	-1.06	▷ 33.17	-0.01	-14.53	0.73	BC 9
				Min V_z	3.58	-0.53	▷ -9.01	0.06	4.11	0.85	BC 14
				Max M_T	-2.61	0.70	1.50	▷ 0.12	-1.36	-0.34	BC 20
				Min M_T	-19.24	-1.01	28.58	▷ -0.02	-11.08	0.69	BC 13
				Max M_y	3.58	-0.53	-9.01	0.06	▷ 4.11	0.85	BC 14
				Min M_y	-20.13	-1.06	33.17	-0.01	▷ -14.53	0.73	BC 9
				Max M_z	-17.33	-1.73	28.14	0.06	-12.34	▷ 1.65	BC 2
				Min M_z	-0.80	1.55	1.78	0.06	-2.78	▷ -1.39	BC 21
			3.870	Max N	▷ 4.15	-0.07	-2.66	0.01	3.04	-0.09	BC 15
			Rechts	Min N	▷ -14.77	0.54	13.56	0.02	-15.28	0.72	BC 8
				Max V_y	-12.41	▷ 0.76	11.87	0.05	-13.47	1.02	BC 2
				Min V_y	-0.58	▷ -0.50	2.18	0.06	-2.80	-0.81	BC 21
				Max V_z	-14.11	0.27	▷ 14.08	-0.02	-15.94	0.35	BC 9
				Min V_z	2.90	0.47	▷ -3.70	0.06	4.37	0.64	BC 14
				Max M_T	-1.86	0.03	1.15	▷ 0.12	-1.48	-0.08	BC 20
				Min M_T	-13.44	0.25	11.20	▷ -0.02	-12.42	0.33	BC 13
				Max M_y	2.90	0.47	-3.70	0.06	▷ 4.37	0.64	BC 14
				Min M_y	-14.11	0.27	14.08	-0.02	▷ -15.94	0.35	BC 9
				Max M_z	-12.41	0.76	11.87	0.05	-13.47	▷ 1.02	BC 2
				Min M_z	-0.58	-0.50	2.18	0.06	-2.80	▷ -0.81	BC 21
			4.515	Max N	▷ 4.20	-0.07	-2.39	0.01	1.36	-0.05	BC 15
			Links	Min N	▷ -14.38	0.56	11.84	0.01	-6.95	0.37	BC 8
				Max V_y	-12.13	▷ 0.79	10.45	0.04	-6.16	0.52	BC 2
				Min V_y	-0.53	▷ -0.62	2.15	0.07	-1.43	-0.46	BC 21
				Max V_z	-13.73	0.27	▷ 12.36	-0.03	-7.28	0.17	BC 9
				Min V_z	2.97	0.49	▷ -3.42	0.06	2.02	0.33	BC 14
				Max M_T	-1.78	-0.06	1.13	▷ 0.12	-0.77	-0.08	BC 20
				Min M_T	-13.73	0.27	12.36	▷ -0.03	-7.28	0.17	BC 9
				Max M_y	2.97	0.49	-3.42	0.06	▷ 2.02	0.33	BC 14
				Min M_y	-13.73	0.27	12.36	-0.03	▷ -7.28	0.17	BC 9
				Max M_z	-12.13	0.79	10.45	0.04	-6.16	▷ 0.52	BC 2
				Min M_z	-0.53	-0.62	2.15	0.07	-1.43	▷ -0.46	BC 21
			4.515	Max N	▷ 4.20	-0.07	-2.39	0.01	1.36	-0.05	BC 15
			Rechts	Min N	▷ -14.38	0.56	11.84	0.01	-6.95	0.37	BC 8
				Max V_y	-12.13	▷ 0.79	10.45	0.04	-6.16	0.52	BC 2
				Min V_y	-0.53	▷ -0.62	2.15	0.07	-1.43	-0.46	BC 21
				Max V_z	-13.73	0.27	▷ 12.36	-0.03	-7.28	0.17	BC 9
				Min V_z	2.97	0.49	▷ -3.42	0.06	2.02	0.33	BC 14
				Max M_T	-1.78	-0.06	1.13	▷ 0.12	-0.77	-0.08	BC 20
				Min M_T	-13.73	0.27	12.36	▷ -0.03	-7.28	0.17	BC 9
				Max M_y	2.97	0.49	-3.42	0.06	▷ 2.02	0.33	BC 14
				Min M_y	-13.73	0.27	12.36	-0.03	▷ -7.28	0.17	BC 9
				Max M_z	-12.13	0.79	10.45	0.04	-6.16	▷ 0.52	BC 2
				Min M_z	-0.53	-0.62	2.15	0.07	-1.43	▷ -0.46	BC 21
			4.577	Max N	▷ 4.21	-0.07	-2.31	0.01	1.21	-0.04	BC 15
			Links	Min N	▷ -14.32	0.56	11.57	0.00	-6.22	0.33	BC 8
				Max V_y	-12.08	▷ 0.79	10.22	0.04	-5.52	0.47	BC 2
				Min V_y	-0.52	▷ -0.65	2.18	0.07	-1.29	-0.42	BC 21
				Max V_z	-13.67	0.27	▷ 12.08	-0.03	-6.52	0.16	BC 9
				Min V_z	2.98	0.50	▷ -3.34	0.06	1.81	0.30	BC 14
				Max M_T	-1.77	-0.08	1.15	▷ 0.12	-0.70	-0.08	BC 20
				Min M_T	-13.67	0.27	12.08	▷ -0.03	-6.52	0.16	BC 9
				Max M_y	2.98	0.50	-3.34	0.06	▷ 1.81	0.30	BC 14
				Min M_y	-13.67	0.27	12.08	-0.03	▷ -6.52	0.16	BC 9
				Max M_z	-12.08	0.79	10.22	0.04	-5.52	▷ 0.47	BC 2
				Min M_z	-0.52	-0.65	2.18	0.07	-1.29	▷ -0.42	BC 21
			4.577	Max N	▷ 4.21	-0.07	-2.31	0.01	1.21	-0.04	BC 15
			Rechts	Min N	▷ -14.32	0.56	11.57	0.00	-6.22	0.33	BC 8
				Max V_y	-12.08	▷ 0.79	10.22	0.04	-5.52	0.47	BC 2
				Min V_y	-0.52	▷ -0.65	2.18	0.07	-1.29	-0.42	BC 21
				Max V_z	-13.67	0.27	▷ 12.08	-0.03	-6.52	0.16	BC 9
				Min V_z	2.98	0.50	▷ -3.34	0.06	1.81	0.30	BC 14
				Max M_T	-1.77	-0.08	1.15	▷ 0.12	-0.70	-0.08	BC 20
				Min M_T	-13.67	0.27	12.08	▷ -0.03	-6.52	0.16	BC 9
				Max M_y	2.98	0.50	-3.34	0.06	▷ 1.81	0.30	BC 14
				Min M_y	-13.67	0.27	12.08	-0.03	▷ -6.52	0.16	BC 9
				Max M_z	-12.08	0.79	10.22	0.04	-5.52	▷ 0.47	BC 2
				Min M_z	-0.52	-0.65	2.18	0.07	-1.29	▷ -0.42	BC 21
			5.123	Max N	▷ 4.24	-0.07	-2.00	0.01	0.07	-0.00	BC 15
				Min N	▷ -14.01	0.57	10.16	-0.00	-0.38	0.02	BC 8
				Max V_y	-11.86	▷ 0.82	9.03	0.03	-0.33	0.03	BC 2
				Min V_y	-0.49	▷ -0.77	2.21	0.07	-0.08	-0.03	BC 21
				Max V_z	-13.37	0.27	▷ 10.68	-0.03	-0.40	0.01	BC 9
				Min V_z	3.05	0.53	▷ -3.02	0.06	0.11	0.02	BC 14
				Max M_T	-1.71	-0.17	1.18	▷ 0.12	-0.04	-0.01	BC 20
				Min M_T	-13.37	0.27	10.68	▷ -0.03	-0.40	0.01	BC 9
				Max M_y	3.05	0.53	-3.02	0.06	▷ 0.11	0.02	BC 14
				Min M_y	-13.37	0.27	10.68	-0.03	▷ -0.40	0.01	BC 9
				Max M_z	-11.86	0.82	9.03	0.03	-0.33	▷ 0.03	BC 2
				Min M_z	-0.49	-0.77	2.21	0.07	-0.08	▷ -0.03	BC 21
			5.160	Max N	▷ 4.25	-0.07	-2.01	0.01	0.00	0.00	BC 15
			Links	Min N	▷ -14.00	0.57	10.14	-0.00	-0.00	0.00	BC 8

4.12 DOORSNEDES - SNEDEKRACHTEN

Resultaatcombinaties

Staaf No.	RC	Knoop No.	Snede x [m]		Krachten [kN] N	V_y	V_z	Momenten [kNm] M_T	M_y	M_z	Bijbehorend Belastingsgeval
199	RC1			Max V_y	-11.85	▷ 0.82	9.01	0.03	-0.00	-0.00	BC 2
				Min V_y	-0.48	▷ -0.77	2.20	0.07	-0.00	-0.00	BC 21
				Max V_z	-13.37	0.27	▷ 10.65	-0.03	-0.00	0.00	BC 9
				Min V_z	3.05	0.53	▷ -3.03	0.06	0.00	0.00	BC 14
				Max M_T	-1.70	-0.17	1.18	▷ 0.12	-0.00	-0.00	BC 20
				Min M_T	-13.37	0.27	10.65	▷ -0.03	-0.00	0.00	BC 9
				Max M_y	3.05	0.53	-3.03	0.06	▷ 0.00	0.00	BC 14
				Min M_y	-13.37	0.27	10.65	-0.03	▷ -0.00	0.00	BC 9
				Max M_z	-13.37	0.27	10.65	-0.03	-0.00	▷ 0.00	BC 9
				Min M_z	0.06	0.58	7.14	0.06	-0.00	▷ -0.00	BC 22
		3	5.160	Max N	▷ 4.25	-0.07	-2.01	0.01	-0.00	0.00	BC 15
			Rechts	Min N	▷ -14.00	0.57	10.14	-0.00	-0.00	0.00	BC 8
				Max V_y	-11.85	▷ 0.82	9.01	0.03	0.00	-0.00	BC 2
				Min V_y	-0.48	▷ -0.77	2.20	0.07	-0.00	-0.00	BC 21
				Max V_z	-13.37	0.27	▷ 10.65	-0.03	-0.00	0.00	BC 9
				Min V_z	3.05	0.53	▷ -3.03	0.06	0.00	0.00	BC 14
				Max M_T	-1.70	-0.17	1.18	▷ 0.12	-0.00	-0.00	BC 20
				Min M_T	-13.37	0.27	10.65	▷ -0.03	-0.00	0.00	BC 9
				Max M_y	-5.12	0.67	0.43	0.05	▷ 0.00	0.00	BC 18
				Min M_y	-0.48	-0.77	2.20	0.07	▷ -0.00	-0.00	BC 21
				Max M_z	-13.37	0.27	10.65	-0.03	-0.00	▷ 0.00	BC 9
				Min M_z	0.06	0.58	7.14	0.06	0.00	▷ -0.00	BC 22
200	RC1	44	0.000	Max N	▷ 2.82	2.25	-16.61	-0.05	53.31	3.70	BC 14
			Links	Min N	▷ -34.94	1.90	68.88	0.08	-206.32	3.68	BC 9
				Max V_y	-25.62	▷ 4.41	57.85	-0.01	-176.36	7.98	BC 2
				Min V_y	-8.48	▷ -2.73	-2.41	-0.05	2.68	-5.91	BC 21
				Max V_z	-31.54	3.22	▷ 70.93	0.06	-215.42	5.97	BC 12
				Min V_z	-5.40	-0.12	▷ -23.04	0.02	83.64	-0.25	BC 23
				Max M_T	-33.92	1.79	70.05	▷ 0.09	-212.36	3.48	BC 13
				Min M_T	-3.84	0.10	-0.64	▷ -0.11	-3.57	-1.04	BC 20
				Max M_y	-5.40	-0.12	-23.04	0.02	▷ 83.64	-0.25	BC 23
				Min M_y	-31.54	3.22	70.93	0.06	▷ -215.42	5.97	BC 12
				Max M_z	-25.62	4.41	57.85	-0.01	-176.36	▷ 7.98	BC 2
				Min M_z	-8.48	-2.73	-2.41	-0.05	2.68	▷ -5.91	BC 21
			0.000	Max N	▷ 2.82	2.25	-16.61	-0.05	53.31	3.70	BC 14
			Rechts	Min N	▷ -34.94	1.90	68.88	0.08	-206.32	3.68	BC 9
				Max V_y	-25.62	▷ 4.41	57.85	-0.01	-176.36	7.98	BC 2
				Min V_y	-8.48	▷ -2.73	-2.41	-0.05	2.68	-5.91	BC 21
				Max V_z	-31.54	3.22	▷ 70.93	0.06	-215.42	5.97	BC 12
				Min V_z	-5.40	-0.12	▷ -23.04	0.02	83.64	-0.25	BC 23
				Max M_T	-33.92	1.79	70.05	▷ 0.09	-212.35	3.48	BC 13
				Min M_T	-3.84	0.10	-0.64	▷ -0.11	-3.57	-1.04	BC 20
				Max M_y	-5.40	-0.12	-23.04	0.02	▷ 83.64	-0.25	BC 23
				Min M_y	-31.54	3.22	70.93	0.06	▷ -215.42	5.97	BC 12
				Max M_z	-25.62	4.41	57.85	-0.01	-176.36	▷ 7.98	BC 2
				Min M_z	-8.48	-2.73	-2.41	-0.05	2.68	▷ -5.91	BC 21
			0.645	Max N	▷ 2.95	2.23	-16.51	-0.04	42.58	2.26	BC 14
			Links	Min N	▷ -34.28	1.91	66.67	0.01	-162.43	2.46	BC 9
				Max V_y	-25.14	▷ 4.40	56.03	-0.11	-139.50	5.13	BC 2
				Min V_y	-8.33	▷ -2.61	-2.59	-0.05	1.05	-4.18	BC 21
				Max V_z	-30.89	3.23	▷ 68.72	-0.04	-170.21	3.88	BC 12
				Min V_z	-5.24	-0.12	▷ -22.94	0.02	68.75	-0.17	BC 23
				Max M_T	-29.09	0.14	48.79	▷ 0.04	-123.04	-0.27	BC 5
				Min M_T	-3.72	0.20	-0.83	▷ -0.11	-4.07	-1.13	BC 20
				Max M_y	-5.24	-0.12	-22.94	0.02	▷ 68.75	-0.17	BC 23
				Min M_y	-30.89	3.23	68.72	-0.04	▷ -170.21	3.88	BC 12
				Max M_z	-25.14	4.40	56.03	-0.11	-139.50	▷ 5.13	BC 2
				Min M_z	-8.33	-2.61	-2.59	-0.05	1.05	▷ -4.18	BC 21
			0.645	Max N	▷ 2.95	2.23	-16.51	-0.04	42.58	2.26	BC 14
			Rechts	Min N	▷ -34.28	1.91	66.67	0.01	-162.43	2.46	BC 9
				Max V_y	-25.14	▷ 4.40	56.03	-0.11	-139.50	5.13	BC 2
				Min V_y	-8.33	▷ -2.61	-2.59	-0.05	1.05	-4.18	BC 21
				Max V_z	-30.89	3.23	▷ 68.72	-0.04	-170.21	3.88	BC 12
				Min V_z	-5.24	-0.12	▷ -22.94	0.02	68.75	-0.17	BC 23
				Max M_T	-29.09	0.14	48.79	▷ 0.04	-123.04	-0.27	BC 5
				Min M_T	-3.72	0.20	-0.83	▷ -0.11	-4.07	-1.13	BC 20
				Max M_y	-5.24	-0.12	-22.94	0.02	▷ 68.75	-0.17	BC 23
				Min M_y	-30.89	3.23	68.72	-0.04	▷ -170.21	3.88	BC 12
				Max M_z	-25.14	4.40	56.03	-0.11	-139.50	▷ 5.13	BC 2
				Min M_z	-8.33	-2.61	-2.59	-0.05	1.05	▷ -4.18	BC 21
			0.707	Max N	▷ 2.96	2.22	-16.45	-0.04	41.55	2.12	BC 14
			Links	Min N	▷ -34.18	1.91	66.33	0.01	-158.28	2.34	BC 9
				Max V_y	-25.07	▷ 4.39	55.75	-0.11	-136.02	4.86	BC 2
				Min V_y	-8.32	▷ -2.59	-2.58	-0.05	0.88	-4.01	BC 21
				Max V_z	-30.79	3.23	▷ 68.37	-0.04	-165.93	3.68	BC 12
				Min V_z	-5.22	-0.12	▷ -22.88	0.02	67.33	-0.17	BC 23
				Max M_T	-29.02	0.15	48.54	▷ 0.03	-120.00	-0.28	BC 5
				Min M_T	-25.07	4.39	55.75	▷ -0.11	-136.02	4.86	BC 2
				Max M_y	-5.22	-0.12	-22.88	0.02	▷ 67.33	-0.17	BC 23
				Min M_y	-30.79	3.23	68.37	-0.04	▷ -165.93	3.68	BC 12
				Max M_z	-25.07	4.39	55.75	-0.11	-136.02	▷ 4.86	BC 2
				Min M_z	-8.32	-2.59	-2.58	-0.05	0.88	▷ -4.01	BC 21
			0.707	Max N	▷ 2.96	2.22	-16.45	-0.04	41.55	2.12	BC 14
			Rechts	Min N	▷ -34.18	1.91	66.33	0.01	-158.28	2.34	BC 9

4.12 DOORSNEDES - SNEDEKRACHTEN

Resultaatcombinaties

Staaf No.	RC	Knoop No.	Snede x [m]		Krachten [kN] N	V_y	V_z	Momenten [kNm] M_T	M_y	M_z	Bijbehorend Belastingsgeval
200	RC1			Max V_y	-25.07	4.39	55.75	-0.11	-136.02	4.86	BC 2
				Min V_y	-8.32	-2.59	-2.58	-0.05	0.88	-4.01	BC 21
				Max V_z	-30.79	3.23	68.37	-0.04	-165.93	3.68	BC 12
				Min V_z	-5.22	-0.12	-22.88	0.02	67.33	-0.17	BC 23
				Max M_T	-29.02	0.15	48.54	0.03	-120.00	-0.28	BC 5
				Min M_T	-25.07	4.39	55.75	-0.11	-136.02	4.86	BC 2
				Max M_y	-5.22	-0.12	-22.88	0.02	67.33	-0.17	BC 23
				Min M_y	-30.79	3.23	68.37	-0.04	-165.93	3.68	BC 12
				Max M_z	-25.07	4.39	55.75	-0.11	-136.02	4.86	BC 2
				Min M_z	-8.32	-2.59	-2.58	-0.05	0.88	-4.01	BC 21
			1.290	Max N	3.08	2.19	-16.29	-0.04	32.06	0.84	BC 14
			Links	Min N	-33.63	1.92	64.47	-0.01	-120.28	1.22	BC 9
				Max V_y	-24.68	4.38	54.19	-0.13	-104.08	2.30	BC 2
				Min V_y	-8.18	-2.47	-2.71	-0.05	-0.64	-2.55	BC 21
				Max V_z	-30.25	3.22	66.51	-0.07	-126.74	1.80	BC 12
				Min V_z	-5.07	-0.12	-22.71	0.01	54.09	-0.10	BC 23
				Max M_T	-28.62	0.21	47.12	0.03	-92.21	-0.39	BC 5
				Min M_T	-24.68	4.38	54.19	-0.13	-104.08	2.30	BC 2
				Max M_y	-5.07	-0.12	-22.71	0.01	54.09	-0.10	BC 23
				Min M_y	-30.25	3.22	66.51	-0.07	-126.74	1.80	BC 12
				Max M_z	-24.68	4.38	54.19	-0.13	-104.08	2.30	BC 2
				Min M_z	-8.18	-2.47	-2.71	-0.05	-0.64	-2.55	BC 21
			1.290	Max N	3.06	1.19	-12.70	-0.04	32.10	1.08	BC 14
			Rechts	Min N	-29.44	0.96	52.13	-0.01	-121.24	1.49	BC 9
				Max V_y	-21.82	2.30	44.24	-0.13	-104.69	2.85	BC 2
				Min V_y	-7.86	-2.32	0.06	-0.06	-0.90	-2.99	BC 21
				Max V_z	-26.28	1.66	53.77	-0.07	-127.52	2.22	BC 12
				Min V_z	-4.58	-0.08	-18.06	0.01	53.58	-0.12	BC 23
				Max M_T	-25.67	-0.44	39.40	0.02	-93.00	-0.40	BC 5
				Min M_T	-21.82	2.30	44.24	-0.13	-104.69	2.85	BC 2
				Max M_y	-4.58	-0.08	-18.06	0.01	53.58	-0.12	BC 23
				Min M_y	-26.28	1.66	53.77	-0.07	-127.52	2.22	BC 12
				Max M_z	-21.82	2.30	44.24	-0.13	-104.69	2.85	BC 2
				Min M_z	-7.86	-2.32	0.06	-0.06	-0.90	-2.99	BC 21
			1.935	Max N	3.17	1.16	-12.54	-0.04	23.91	0.32	BC 14
			Links	Min N	-28.87	0.96	50.09	-0.01	-88.11	0.88	BC 9
				Max V_y	-21.41	2.28	42.56	-0.13	-76.58	1.37	BC 2
				Min V_y	-7.72	-2.20	-0.06	-0.06	-0.93	-1.52	BC 21
				Max V_z	-25.71	1.66	51.72	-0.07	-93.33	1.15	BC 12
				Min V_z	-4.43	-0.08	-17.90	0.01	41.93	-0.07	BC 23
				Max M_T	-25.24	-0.38	37.87	0.02	-67.97	-0.13	BC 5
				Min M_T	-21.41	2.28	42.56	-0.13	-76.58	1.37	BC 2
				Max M_y	-4.43	-0.08	-17.90	0.01	41.93	-0.07	BC 23
				Min M_y	-25.71	1.66	51.72	-0.07	-93.33	1.15	BC 12
				Max M_z	-21.41	2.28	42.56	-0.13	-76.58	1.37	BC 2
				Min M_z	-7.72	-2.20	-0.06	-0.06	-0.93	-1.52	BC 21
			1.935	Max N	3.17	1.16	-12.54	-0.04	23.91	0.32	BC 14
			Rechts	Min N	-28.87	0.96	50.09	-0.01	-88.11	0.88	BC 9
				Max V_y	-21.41	2.28	42.56	-0.13	-76.58	1.37	BC 2
				Min V_y	-7.72	-2.20	-0.06	-0.06	-0.93	-1.52	BC 21
				Max V_z	-25.71	1.66	51.72	-0.07	-93.33	1.15	BC 12
				Min V_z	-4.43	-0.08	-17.90	0.01	41.93	-0.07	BC 23
				Max M_T	-25.24	-0.38	37.87	0.02	-67.97	-0.13	BC 5
				Min M_T	-21.41	2.28	42.56	-0.13	-76.58	1.37	BC 2
				Max M_y	-4.43	-0.08	-17.90	0.01	41.93	-0.07	BC 23
				Min M_y	-25.71	1.66	51.72	-0.07	-93.33	1.15	BC 12
				Max M_z	-21.41	2.28	42.56	-0.13	-76.58	1.37	BC 2
				Min M_z	-7.72	-2.20	-0.06	-0.06	-0.93	-1.52	BC 21
			1.997	Max N	3.18	1.16	-12.47	-0.04	23.13	0.25	BC 14
			Links	Min N	-28.78	0.96	49.77	-0.01	-85.00	0.82	BC 9
				Max V_y	-21.35	2.27	42.30	-0.13	-73.93	1.23	BC 2
				Min V_y	-7.71	-2.18	-0.05	-0.06	-0.93	-1.38	BC 21
				Max V_z	-25.63	1.66	51.40	-0.07	-90.12	1.05	BC 12
				Min V_z	-4.42	-0.08	-17.83	0.01	40.81	-0.06	BC 23
				Max M_T	-25.18	-0.37	37.64	0.02	-65.61	-0.10	BC 5
				Min M_T	-21.35	2.27	42.30	-0.13	-73.93	1.23	BC 2
				Max M_y	-4.42	-0.08	-17.83	0.01	40.81	-0.06	BC 23
				Min M_y	-25.63	1.66	51.40	-0.07	-90.12	1.05	BC 12
				Max M_z	-21.35	2.27	42.30	-0.13	-73.93	1.23	BC 2
				Min M_z	-7.71	-2.18	-0.05	-0.06	-0.93	-1.38	BC 21
			1.997	Max N	3.18	1.16	-12.47	-0.04	23.13	0.25	BC 14
			Rechts	Min N	-28.78	0.96	49.77	-0.01	-85.00	0.82	BC 9
				Max V_y	-21.35	2.27	42.30	-0.13	-73.93	1.23	BC 2
				Min V_y	-7.71	-2.18	-0.05	-0.06	-0.93	-1.38	BC 21
				Max V_z	-25.63	1.66	51.40	-0.07	-90.12	1.05	BC 12
				Min V_z	-4.42	-0.08	-17.83	0.01	40.81	-0.06	BC 23
				Max M_T	-25.18	-0.37	37.64	0.02	-65.61	-0.10	BC 5
				Min M_T	-21.35	2.27	42.30	-0.13	-73.93	1.23	BC 2
				Max M_y	-4.42	-0.08	-17.83	0.01	40.81	-0.06	BC 23
				Min M_y	-25.63	1.66	51.40	-0.07	-90.12	1.05	BC 12
				Max M_z	-21.35	2.27	42.30	-0.13	-73.93	1.23	BC 2
				Min M_z	-7.71	-2.18	-0.05	-0.06	-0.93	-1.38	BC 21
			2.580	Max N	3.28	1.13	-12.26	-0.05	15.98	-0.42	BC 14
			Links	Min N	-28.31	0.97	48.06	-0.00	-56.60	0.25	BC 9

4.12 DOORSNEDES - SNEDEKRACHTEN

Resultaatcombinaties

Staaf No.	RC	Knoop No.	Snede x [m]		Krachten [kN] N	V_y	V_z	Momenten [kNm] M_T	M_y	M_z	Bijbehorend Belastingsgeval
200	RC1			Max V_y	-21.01	▷ 2.25	40.85	-0.10	-49.79	-0.09	BC 2
				Min V_y	-7.59	▷ -2.06	-0.12	-0.06	-0.96	-0.16	BC 21
				Max V_z	-25.17	1.65	▷ 49.69	-0.06	-60.77	0.09	BC 12
				Min V_z	-4.29	-0.08	▷ -17.61	0.01	30.54	-0.02	BC 23
				Max M_T	-24.82	-0.31	36.34	▷ 0.01	-44.13	0.09	BC 5
				Min M_T	-3.31	-0.62	1.08	▷ -0.11	-3.22	-0.48	BC 20
				Max M_y	-4.29	-0.08	-17.61	0.01	▷ 30.54	-0.02	BC 23
				Min M_y	-25.17	1.65	49.69	-0.06	▷ -60.77	0.09	BC 12
				Max M_z	-28.31	0.97	48.06	-0.00	-56.60	▷ 0.25	BC 9
				Min M_z	-3.31	-0.62	1.08	-0.11	-3.22	▷ -0.48	BC 20
			2.580	Max N	▷ 3.39	0.58	-9.57	-0.05	16.12	-0.13	BC 14
			Rechts	Min N	▷ -24.03	1.06	36.42	-0.00	-57.83	0.64	BC 9
				Max V_y	-18.00	▷ 1.79	31.26	-0.10	-50.66	0.62	BC 2
				Min V_y	-6.80	▷ -1.81	0.84	-0.06	-1.23	-0.78	BC 21
				Max V_z	-21.13	1.47	▷ 37.78	-0.05	-61.86	0.65	BC 12
				Min V_z	-3.62	-0.08	▷ -14.32	0.01	30.26	-0.05	BC 23
				Max M_T	-20.40	0.76	32.52	▷ 0.01	-54.61	0.45	BC 7
				Min M_T	-2.79	-0.90	1.59	▷ -0.12	-3.33	-0.70	BC 20
				Max M_y	-3.62	-0.08	-14.32	0.01	▷ 30.26	-0.05	BC 23
				Min M_y	-21.13	1.47	37.78	-0.05	▷ -61.86	0.65	BC 12
				Max M_z	-21.99	1.52	36.78	-0.06	-58.86	▷ 0.69	BC 8
				Min M_z	-6.80	-1.81	0.84	-0.06	-1.23	▷ -0.78	BC 21
			3.225	Max N	▷ 3.49	0.56	-9.35	-0.05	9.97	-0.50	BC 14
			Links	Min N	▷ -23.54	1.06	34.54	0.01	-34.80	-0.04	BC 9
				Max V_y	-17.65	▷ 1.76	29.71	-0.08	-30.88	-0.53	BC 2
				Min V_y	-6.69	▷ -1.69	0.77	-0.07	-0.73	0.37	BC 21
				Max V_z	-20.65	1.45	▷ 35.90	-0.04	-37.95	-0.29	BC 12
				Min V_z	-3.49	-0.08	▷ -14.10	0.00	21.04	0.00	BC 23
				Max M_T	-20.03	0.76	30.99	▷ 0.01	-34.01	-0.03	BC 7
				Min M_T	-2.70	-0.81	1.51	▷ -0.12	-2.36	-0.14	BC 20
				Max M_y	-3.49	-0.08	-14.10	0.00	▷ 21.04	0.00	BC 23
				Min M_y	-20.65	1.45	35.90	-0.04	▷ -37.95	-0.29	BC 12
				Max M_z	-6.69	-1.69	0.77	-0.07	-0.73	▷ 0.37	BC 21
				Min M_z	-17.65	1.76	29.71	-0.08	-30.88	▷ -0.53	BC 2
			3.225	Max N	▷ 3.49	0.56	-9.35	-0.05	9.97	-0.50	BC 14
			Rechts	Min N	▷ -23.54	1.06	34.54	0.01	-34.80	-0.04	BC 9
				Max V_y	-17.65	▷ 1.76	29.71	-0.08	-30.88	-0.53	BC 2
				Min V_y	-6.69	▷ -1.69	0.77	-0.07	-0.73	0.37	BC 21
				Max V_z	-20.65	1.45	▷ 35.90	-0.04	-37.95	-0.29	BC 12
				Min V_z	-3.49	-0.08	▷ -14.10	0.00	21.04	0.00	BC 23
				Max M_T	-20.03	0.76	30.99	▷ 0.01	-34.01	-0.03	BC 7
				Min M_T	-2.70	-0.81	1.51	▷ -0.12	-2.36	-0.14	BC 20
				Max M_y	-3.49	-0.08	-14.10	0.00	▷ 21.04	0.00	BC 23
				Min M_y	-20.65	1.45	35.90	-0.04	▷ -37.95	-0.29	BC 12
				Max M_z	-6.69	-1.69	0.77	-0.07	-0.73	▷ 0.37	BC 21
				Min M_z	-17.65	1.76	29.71	-0.08	-30.88	▷ -0.53	BC 2
			3.287	Max N	▷ 3.50	0.55	-9.27	-0.05	9.39	-0.54	BC 14
			Links	Min N	▷ -23.47	1.06	34.25	0.01	-32.66	-0.11	BC 9
				Max V_y	-17.60	▷ 1.76	29.47	-0.08	-29.04	-0.64	BC 2
				Min V_y	-6.67	▷ -1.67	0.78	-0.07	-0.68	0.47	BC 21
				Max V_z	-20.58	1.45	▷ 35.60	-0.04	-35.72	-0.38	BC 12
				Min V_z	-3.48	-0.08	▷ -14.02	0.00	20.16	0.01	BC 23
				Max M_T	-19.97	0.76	30.75	▷ 0.01	-32.09	-0.08	BC 7
				Min M_T	-2.69	-0.79	1.53	▷ -0.12	-2.26	-0.09	BC 20
				Max M_y	-3.48	-0.08	-14.02	0.00	▷ 20.16	0.01	BC 23
				Min M_y	-20.58	1.45	35.60	-0.04	▷ -35.72	-0.38	BC 12
				Max M_z	-6.67	-1.67	0.78	-0.07	-0.68	▷ 0.47	BC 21
				Min M_z	-17.60	1.76	29.47	-0.08	-29.04	▷ -0.64	BC 2
			3.287	Max N	▷ 3.50	0.55	-9.27	-0.05	9.39	-0.54	BC 14
			Rechts	Min N	▷ -23.47	1.06	34.25	0.01	-32.66	-0.11	BC 9
				Max V_y	-17.60	▷ 1.76	29.47	-0.08	-29.04	-0.64	BC 2
				Min V_y	-6.67	▷ -1.67	0.78	-0.07	-0.68	0.47	BC 21
				Max V_z	-20.58	1.45	▷ 35.60	-0.04	-35.72	-0.38	BC 12
				Min V_z	-3.48	-0.08	▷ -14.02	0.00	20.16	0.01	BC 23
				Max M_T	-19.97	0.76	30.75	▷ 0.01	-32.09	-0.08	BC 7
				Min M_T	-2.69	-0.79	1.53	▷ -0.12	-2.26	-0.09	BC 20
				Max M_y	-3.48	-0.08	-14.02	0.00	▷ 20.16	0.01	BC 23
				Min M_y	-20.58	1.45	35.60	-0.04	▷ -35.72	-0.38	BC 12
				Max M_z	-6.67	-1.67	0.78	-0.07	-0.68	▷ 0.47	BC 21
				Min M_z	-17.60	1.76	29.47	-0.08	-29.04	▷ -0.64	BC 2
			3.870	Max N	▷ 3.58	0.53	-9.01	-0.06	4.11	-0.85	BC 14
			Links	Min N	▷ -23.08	1.06	32.68	0.02	-13.26	-0.73	BC 9
				Max V_y	-17.33	▷ 1.73	28.14	-0.06	-12.34	-1.65	BC 2
				Min V_y	-6.56	▷ -1.55	0.77	-0.07	-0.21	1.40	BC 21
				Max V_z	-20.20	1.44	▷ 34.03	-0.02	-15.54	-1.22	BC 12
				Min V_z	-3.37	-0.08	▷ -13.75	0.00	12.12	0.06	BC 23
				Max M_T	-23.08	1.06	32.68	▷ 0.02	-13.26	-0.73	BC 9
				Min M_T	-2.61	-0.70	1.50	▷ -0.12	-1.36	0.34	BC 20
				Max M_y	-3.37	-0.08	-13.75	0.00	▷ 12.12	0.06	BC 23
				Min M_y	-15.63	1.62	30.12	-0.07	▷ -15.76	-1.58	BC 6
				Max M_z	-6.56	-1.55	0.77	-0.07	-0.21	▷ 1.40	BC 21
				Min M_z	-17.33	1.73	28.14	-0.06	-12.34	▷ -1.65	BC 2
			3.870	Max N	▷ 2.90	-0.47	-3.70	-0.06	4.37	-0.64	BC 14
			Rechts	Min N	▷ -16.60	-0.27	13.17	0.02	-14.79	-0.35	BC 9

4.12 DOORSNEDES - SNEDEKRACHTEN

Resultaatcombinaties

Staaf No.	RC	Knoop No.	Snede x [m]		Krachten [kN] N	V_y	V_z	Momenten [kNm] M_T	M_y	M_z	Bijbehorend Belastingsgeval
200	RC1			Max V_y	-5.44	▷ 0.51	0.36	-0.07	-0.48	0.82	BC 21
				Min V_y	-12.41	▷ -0.76	11.87	-0.05	-13.47	-1.02	BC 2
				Max V_z	-14.07	-0.53	▷ 14.86	-0.02	-16.95	-0.70	BC 12
				Min V_z	-3.09	0.02	▷ -9.67	0.00	12.07	0.03	BC 23
				Max M_T	-16.60	-0.27	13.17	▷ 0.02	-14.79	-0.35	BC 9
				Min M_T	-1.86	-0.03	1.15	▷ -0.12	-1.48	0.08	BC 20
				Max M_y	-3.09	0.02	-9.67	0.00	▷ 12.07	0.03	BC 23
				Min M_y	-14.07	-0.53	14.86	-0.02	▷ -16.95	-0.70	BC 12
				Max M_z	-5.44	0.51	0.36	-0.07	-0.48	▷ 0.82	BC 21
				Min M_z	-12.41	-0.76	11.87	-0.05	-13.47	▷ -1.02	BC 2
			4.515	Max N	▷ 2.97	-0.49	-3.42	-0.06	2.02	-0.33	BC 14
			Links	Min N	▷ -16.19	-0.27	11.46	0.03	-6.71	-0.17	BC 9
				Max V_y	-5.33	▷ 0.63	0.35	-0.07	-0.27	0.47	BC 21
				Min V_y	-12.13	▷ -0.79	10.45	-0.04	-6.16	-0.52	BC 2
				Max V_z	-13.68	-0.54	▷ 13.14	-0.01	-7.79	-0.36	BC 12
				Min V_z	-2.99	0.02	▷ -9.39	0.00	5.87	0.01	BC 23
				Max M_T	-16.19	-0.27	11.46	▷ 0.03	-6.71	-0.17	BC 9
				Min M_T	-1.78	0.06	1.13	▷ -0.12	-0.77	0.08	BC 20
				Max M_y	-2.99	0.02	-9.39	0.00	▷ 5.87	0.01	BC 23
				Min M_y	-10.74	-0.76	13.04	-0.04	▷ -7.83	-0.51	BC 6
				Max M_z	-5.33	0.63	0.35	-0.07	-0.27	▷ 0.47	BC 21
				Min M_z	-12.13	-0.79	10.45	-0.04	-6.16	▷ -0.52	BC 2
			4.515	Max N	▷ 2.97	-0.49	-3.42	-0.06	2.02	-0.33	BC 14
			Rechts	Min N	▷ -16.19	-0.27	11.46	0.03	-6.71	-0.17	BC 9
				Max V_y	-5.33	▷ 0.63	0.35	-0.07	-0.27	0.47	BC 21
				Min V_y	-12.13	▷ -0.79	10.45	-0.04	-6.16	-0.52	BC 2
				Max V_z	-13.68	-0.54	▷ 13.14	-0.01	-7.79	-0.36	BC 12
				Min V_z	-2.99	0.02	▷ -9.39	0.00	5.87	0.01	BC 23
				Max M_T	-16.19	-0.27	11.46	▷ 0.03	-6.71	-0.17	BC 9
				Min M_T	-1.78	0.06	1.13	▷ -0.12	-0.77	0.08	BC 20
				Max M_y	-2.99	0.02	-9.39	0.00	▷ 5.87	0.01	BC 23
				Min M_y	-10.74	-0.76	13.04	-0.04	▷ -7.83	-0.51	BC 6
				Max M_z	-5.33	0.63	0.35	-0.07	-0.27	▷ 0.47	BC 21
				Min M_z	-12.13	-0.79	10.45	-0.04	-6.16	▷ -0.52	BC 2
			4.577	Max N	▷ 2.98	-0.50	-3.34	-0.06	1.81	-0.30	BC 14
			Links	Min N	▷ -16.13	-0.27	11.19	0.03	-6.01	-0.16	BC 9
				Max V_y	-5.32	▷ 0.65	0.37	-0.07	-0.25	0.43	BC 21
				Min V_y	-12.08	▷ -0.79	10.22	-0.04	-5.52	-0.47	BC 2
				Max V_z	-13.62	-0.55	▷ 12.87	-0.01	-6.98	-0.32	BC 12
				Min V_z	-2.97	0.02	▷ -9.31	0.00	5.28	0.01	BC 23
				Max M_T	-16.13	-0.27	11.19	▷ 0.03	-6.01	-0.16	BC 9
				Min M_T	-1.77	0.08	1.15	▷ -0.12	-0.70	0.08	BC 20
				Max M_y	-2.97	0.02	-9.31	0.00	▷ 5.28	0.01	BC 23
				Min M_y	-10.70	-0.77	12.81	-0.04	▷ -7.03	-0.46	BC 6
				Max M_z	-5.32	0.65	0.37	-0.07	-0.25	▷ 0.43	BC 21
				Min M_z	-12.08	-0.79	10.22	-0.04	-5.52	▷ -0.47	BC 2
			4.577	Max N	▷ 2.98	-0.50	-3.34	-0.06	1.81	-0.30	BC 14
			Rechts	Min N	▷ -16.13	-0.27	11.19	0.03	-6.01	-0.16	BC 9
				Max V_y	-5.32	▷ 0.65	0.37	-0.07	-0.25	0.43	BC 21
				Min V_y	-12.08	▷ -0.79	10.22	-0.04	-5.52	-0.47	BC 2
				Max V_z	-13.62	-0.55	▷ 12.87	-0.01	-6.98	-0.32	BC 12
				Min V_z	-2.97	0.02	▷ -9.31	0.00	5.28	0.01	BC 23
				Max M_T	-16.13	-0.27	11.19	▷ 0.03	-6.01	-0.16	BC 9
				Min M_T	-1.77	0.08	1.15	▷ -0.12	-0.70	0.08	BC 20
				Max M_y	-2.97	0.02	-9.31	0.00	▷ 5.28	0.01	BC 23
				Min M_y	-10.70	-0.77	12.81	-0.04	▷ -7.03	-0.46	BC 6
				Max M_z	-5.32	0.65	0.37	-0.07	-0.25	▷ 0.43	BC 21
				Min M_z	-12.08	-0.79	10.22	-0.04	-5.52	▷ -0.47	BC 2
			5.123	Max N	▷ 3.05	-0.53	-3.02	-0.06	0.11	-0.02	BC 14
			Links	Min N	▷ -15.80	-0.27	9.79	0.03	-0.36	-0.01	BC 9
				Max V_y	-5.23	▷ 0.77	0.42	-0.07	-0.02	0.03	BC 21
				Min V_y	-11.86	▷ -0.82	9.03	-0.03	-0.33	-0.03	BC 2
				Max V_z	-10.48	-0.80	▷ 11.62	-0.03	-0.43	-0.03	BC 6
				Min V_z	-2.88	0.02	▷ -8.98	-0.00	0.33	0.00	BC 23
				Max M_T	-15.80	-0.27	9.79	▷ 0.03	-0.36	-0.01	BC 9
				Min M_T	-1.71	0.17	1.18	▷ -0.12	-0.04	0.01	BC 20
				Max M_y	-2.88	0.02	-8.98	-0.00	▷ 0.33	0.00	BC 23
				Min M_y	-10.48	-0.80	11.62	-0.03	▷ -0.43	-0.03	BC 6
				Max M_z	-5.23	0.77	0.42	-0.07	-0.02	▷ 0.03	BC 21
				Min M_z	-11.86	-0.82	9.03	-0.03	-0.33	▷ -0.03	BC 2
			5.123	Max N	▷ 3.05	-0.53	-3.02	-0.06	0.11	-0.02	BC 14
			Rechts	Min N	▷ -15.80	-0.27	9.79	0.03	-0.36	-0.01	BC 9
				Max V_y	-5.23	▷ 0.77	0.42	-0.07	-0.02	0.03	BC 21
				Min V_y	-11.86	▷ -0.82	9.03	-0.03	-0.33	-0.03	BC 2
				Max V_z	-10.48	-0.80	▷ 11.62	-0.03	-0.43	-0.03	BC 6
				Min V_z	-2.88	0.02	▷ -8.98	-0.00	0.33	0.00	BC 23
				Max M_T	-15.80	-0.27	9.79	▷ 0.03	-0.36	-0.01	BC 9
				Min M_T	-1.71	0.17	1.18	▷ -0.12	-0.04	0.01	BC 20
				Max M_y	-2.88	0.02	-8.98	-0.00	▷ 0.33	0.00	BC 23
				Min M_y	-10.48	-0.80	11.62	-0.03	▷ -0.43	-0.03	BC 6
				Max M_z	-5.23	0.77	0.42	-0.07	-0.02	▷ 0.03	BC 21
				Min M_z	-11.86	-0.82	9.03	-0.03	-0.33	▷ -0.03	BC 2
			5.160	Max N	▷ 3.05	-0.53	-3.03	-0.06	0.00	-0.00	BC 14
			Links	Min N	▷ -15.79	-0.27	9.76	0.03	-0.00	-0.00	BC 9

4.12 DOORSNEDES - SNEDEKRACHTEN

Resultaatcombinaties

Staaf No.	RC	Knoop No.	Snede x [m]		Krachten [kN] N	V_y	V_z	Momenten [kNm] M_T	M_y	M_z	Bijbehorend Belastingsgeval
200	RC1			Max V_y	-5.23	▷ 0.77	0.41	-0.07	-0.00	-0.00	BC 21
				Min V_y	-11.85	▷ -0.82	9.01	-0.03	-0.00	0.00	BC 2
				Max V_z	-10.47	-0.80	▷ 11.60	-0.03	-0.00	0.00	BC 6
				Min V_z	-2.88	0.02	▷ -8.99	-0.00	0.00	-0.00	BC 23
				Max M_T	-15.79	-0.27	9.76	▷ 0.03	-0.00	-0.00	BC 9
				Min M_T	-1.70	0.17	1.18	▷ -0.12	-0.00	0.00	BC 20
				Max M_y	0.59	-0.58	-8.20	-0.06	▷ 0.00	-0.00	BC 22
				Min M_y	-15.10	-0.26	11.06	0.03	▷ -0.00	-0.00	BC 13
				Max M_z	-11.44	-0.43	8.61	-0.07	-0.00	▷ 0.00	BC 4
				Min M_z	0.59	-0.58	-8.20	-0.06	0.00	▷ -0.00	BC 22
		4	5.160	Max N	▷ 3.05	-0.53	-3.03	-0.06	0.00	-0.00	BC 14
			Rechts	Min N	▷ -15.79	-0.27	9.76	0.03	-0.00	-0.00	BC 9
				Max V_y	-5.23	▷ 0.77	0.41	-0.07	-0.00	-0.00	BC 21
				Min V_y	-11.85	▷ -0.82	9.01	-0.03	0.00	0.00	BC 2
				Max V_z	-10.47	-0.80	▷ 11.60	-0.03	0.00	0.00	BC 6
				Min V_z	-2.88	0.02	▷ -8.99	-0.00	0.00	-0.00	BC 23
				Max M_T	-15.79	-0.27	9.76	▷ 0.03	-0.00	-0.00	BC 9
				Min M_T	-1.70	0.17	1.18	▷ -0.12	-0.00	0.00	BC 20
				Max M_y	0.59	-0.58	-8.20	-0.06	▷ 0.00	-0.00	BC 22
				Min M_y	-5.23	0.77	0.41	-0.07	▷ -0.00	-0.00	BC 21
				Max M_z	-11.44	-0.43	8.61	-0.07	0.00	▷ 0.00	BC 4
				Min M_z	0.59	-0.58	-8.20	-0.06	0.00	▷ -0.00	BC 22
	Snede No.18 - 19 : 3BD 960/200/380/200 - 3BD 760/200/280/200										
3	RC1	1	0.000	Max N	▷ 60.67	15.02	0.00	-0.00	-0.00	61.25	BC 14
			Links	Min N	▷ -262.03	-11.28	-8.98	-0.00	35.88	-61.13	BC 9
				Max V_y	60.67	▷ 15.02	0.00	-0.00	-0.00	61.25	BC 14
				Min V_y	-29.95	▷ -20.30	-17.97	0.00	70.95	-89.01	BC 21
				Max V_z	-188.52	3.21	▷ 6.33	0.11	-101.10	-2.17	BC 6
				Min V_z	5.21	0.90	▷ -30.70	-0.22	271.64	4.80	BC 23
				Max M_T	-188.52	3.21	6.33	▷ 0.11	-101.10	-2.17	BC 6
				Min M_T	5.21	0.90	-30.70	▷ -0.22	271.64	4.80	BC 23
				Max M_y	5.21	0.90	-30.70	-0.22	▷ 271.64	4.80	BC 23
				Min M_y	-188.52	3.21	6.33	0.11	▷ -101.10	-2.17	BC 6
				Max M_z	60.67	15.02	0.00	-0.00	-0.00	▷ 61.25	BC 14
				Min M_z	-211.52	-18.82	-17.97	-0.00	71.57	▷ -91.86	BC 5
			0.000	Max N	▷ 60.67	15.02	0.00	-0.00	-0.00	61.25	BC 14
			Rechts	Min N	▷ -262.03	-11.28	-8.98	-0.00	35.88	-61.13	BC 9
				Max V_y	60.67	▷ 15.02	0.00	-0.00	-0.00	61.25	BC 14
				Min V_y	-29.95	▷ -20.30	-17.97	0.00	70.95	-89.01	BC 21
				Max V_z	-188.52	3.21	▷ 6.33	0.11	-101.10	-2.17	BC 6
				Min V_z	5.21	0.90	▷ -30.70	-0.22	271.64	4.80	BC 23
				Max M_T	-188.52	3.21	6.33	▷ 0.11	-101.10	-2.17	BC 6
				Min M_T	5.21	0.90	-30.70	▷ -0.22	271.64	4.80	BC 23
				Max M_y	5.21	0.90	-30.70	-0.22	▷ 271.64	4.80	BC 23
				Min M_y	-188.52	3.21	6.33	0.11	▷ -101.10	-2.17	BC 6
				Max M_z	60.67	15.02	0.00	-0.00	-0.00	▷ 61.25	BC 14
				Min M_z	-211.52	-18.82	-17.97	-0.00	71.57	▷ -91.86	BC 5
			4.300	Max N	▷ 66.57	14.96	0.00	-0.00	-0.00	-3.15	BC 14
			Links	Min N	▷ -253.19	-11.56	-4.74	-0.00	6.63	-11.85	BC 9
				Max V_y	66.57	▷ 14.96	0.00	-0.00	-0.00	-3.15	BC 14
				Min V_y	-24.03	▷ -20.33	-9.22	-0.01	13.20	-1.62	BC 21
				Max V_z	-179.68	3.15	▷ 6.82	0.09	-72.83	-15.89	BC 6
				Min V_z	11.23	0.91	▷ -21.86	-0.21	159.34	0.96	BC 23
				Max M_T	-185.23	-8.46	-2.59	▷ 0.14	-59.70	-8.83	BC 7
				Min M_T	11.23	0.91	-21.86	▷ -0.21	159.34	0.96	BC 23
				Max M_y	11.23	0.91	-21.86	-0.21	▷ 159.34	0.96	BC 23
				Min M_y	-179.68	3.15	6.82	0.09	▷ -72.83	-15.89	BC 6
				Max M_z	61.05	3.48	-9.13	-0.00	13.20	▷ 3.77	BC 15
				Min M_z	-204.45	1.85	-0.00	0.00	0.00	▷ -17.31	BC 2
		158	4.300	Max N	▷ 66.57	14.96	0.00	-0.00	-0.00	-3.15	BC 14
			Rechts	Min N	▷ -253.19	-11.56	-4.74	-0.00	6.63	-11.85	BC 9
				Max V_y	66.57	▷ 14.96	0.00	-0.00	-0.00	-3.15	BC 14
				Min V_y	-24.03	▷ -20.33	-9.22	-0.01	13.20	-1.62	BC 21
				Max V_z	-179.68	3.15	▷ 6.82	0.09	-72.83	-15.89	BC 6
				Min V_z	11.23	0.91	▷ -21.86	-0.21	159.34	0.96	BC 23
				Max M_T	-185.23	-8.46	-2.59	▷ 0.14	-59.70	-8.83	BC 7
				Min M_T	11.23	0.91	-21.86	▷ -0.21	159.34	0.96	BC 23
				Max M_y	11.23	0.91	-21.86	-0.21	▷ 159.34	0.96	BC 23
				Min M_y	-179.68	3.15	6.82	0.09	▷ -72.83	-15.89	BC 6
				Max M_z	61.05	3.48	-9.13	-0.00	13.20	▷ 3.77	BC 15
				Min M_z	-204.45	1.85	-0.00	0.00	0.00	▷ -17.31	BC 2
32	RC1	9	0.000	Max N	▷ 55.17	-3.50	-17.97	0.00	70.67	-18.74	BC 15
			Links	Min N	▷ -266.55	16.97	-0.00	-0.00	0.00	82.13	BC 8
				Max V_y	-227.80	▷ 20.96	-0.00	-0.00	0.00	93.99	BC 2
				Min V_y	40.37	▷ -22.16	-17.97	0.01	70.67	-98.57	BC 21
				Max V_z	-100.34	15.14	▷ 6.29	-0.11	-100.07	62.44	BC 18
				Min V_z	5.21	-0.90	▷ -30.70	0.22	271.64	-4.79	BC 23
				Max M_T	5.21	-0.90	-30.70	▷ 0.22	271.64	-4.79	BC 23
				Min M_T	-203.05	19.69	6.29	▷ -0.11	-101.03	87.00	BC 6
				Max M_y	5.21	-0.90	-30.70	0.22	▷ 271.64	-4.79	BC 23
				Min M_y	-203.05	19.69	6.29	-0.11	▷ -101.03	87.00	BC 6
				Max M_z	-227.80	20.96	-0.00	-0.00	0.00	▷ 93.99	BC 2
				Min M_z	40.37	-22.16	-17.97	0.01	70.67	▷ -98.57	BC 21
			0.000	Max N	▷ 55.17	-3.50	-17.97	0.00	70.67	-18.74	BC 15
			Rechts	Min N	▷ -266.55	16.97	-0.00	-0.00	0.00	82.13	BC 8

4.12 DOORSNEDES - SNEDEKRACHTEN

Resultaatcombinaties

Staaf No.	RC	Knoop No.	Snede x [m]		Krachten [kN] N	V_y	V_z	Momenten [kNm] M_T	M_y	M_z	Bijbehorend Belastingsgeval
32	RC1			Max V_y	-227.80	▷ 20.96	-0.00	-0.00	0.00	93.99	BC 2
				Min V_y	40.37	▷ -22.16	-17.97	0.01	70.67	-98.57	BC 21
				Max V_z	-100.34	15.14	▷ 6.29	-0.11	-100.07	62.44	BC 18
				Min V_z	5.21	-0.90	▷ -30.70	0.22	271.64	-4.79	BC 23
				Max M_T	5.21	-0.90	-30.70	▷ 0.22	271.64	-4.79	BC 23
				Min M_T	-203.05	19.69	6.29	▷ -0.11	-101.03	87.00	BC 6
				Max M_y	5.21	-0.90	-30.70	0.22	▷ 271.64	-4.79	BC 23
				Min M_y	-203.05	19.69	6.29	-0.11	▷ -101.03	87.00	BC 6
				Max M_z	-227.80	20.96	-0.00	-0.00	0.00	▷ 93.99	BC 2
				Min M_z	40.37	-22.16	-17.97	0.01	70.67	▷ -98.57	BC 21
			4.300	Max N	▷ 61.06	-3.48	-9.13	0.00	13.20	-3.74	BC 15
			Links	Min N	▷ -257.71	17.31	-0.00	-0.00	0.00	8.14	BC 8
				Max V_y	-218.95	▷ 21.26	-0.00	-0.00	0.00	2.92	BC 2
				Min V_y	46.30	▷ -22.09	-9.14	-0.00	13.15	-3.49	BC 21
				Max V_z	-194.19	19.93	▷ 6.82	-0.20	-72.86	1.55	BC 6
				Min V_z	11.24	-0.91	▷ -21.86	0.21	159.34	-0.95	BC 23
				Max M_T	2.21	10.47	-12.68	▷ 0.32	146.03	-8.07	BC 22
				Min M_T	-194.19	19.93	6.82	▷ -0.20	-72.86	1.55	BC 6
				Max M_y	11.24	-0.91	-21.86	0.21	▷ 159.34	-0.95	BC 23
				Min M_y	-194.19	19.93	6.82	-0.20	▷ -72.86	1.55	BC 6
				Max M_z	-253.22	11.55	-4.74	0.00	6.63	▷ 11.76	BC 9
				Min M_z	52.10	7.87	0.00	-0.00	-0.00	▷ -10.84	BC 14
		153	4.300	Max N	▷ 61.06	-3.48	-9.13	0.00	13.20	-3.74	BC 15
			Rechts	Min N	▷ -257.71	17.31	-0.00	-0.00	0.00	8.14	BC 8
				Max V_y	-218.95	▷ 21.26	-0.00	-0.00	0.00	2.92	BC 2
				Min V_y	46.30	▷ -22.09	-9.14	-0.00	13.15	-3.49	BC 21
				Max V_z	-194.19	19.93	▷ 6.82	-0.20	-72.86	1.55	BC 6
				Min V_z	11.24	-0.91	▷ -21.86	0.21	159.34	-0.95	BC 23
				Max M_T	2.21	10.47	-12.68	▷ 0.32	146.03	-8.07	BC 22
				Min M_T	-194.19	19.93	6.82	▷ -0.20	-72.86	1.55	BC 6
				Max M_y	11.24	-0.91	-21.86	0.21	▷ 159.34	-0.95	BC 23
				Min M_y	-194.19	19.93	6.82	-0.20	▷ -72.86	1.55	BC 6
				Max M_z	-253.22	11.55	-4.74	0.00	6.63	▷ 11.75	BC 9
				Min M_z	52.10	7.87	0.00	-0.00	-0.00	▷ -10.84	BC 14

RF-STEEL EC3
CA1
Ontwerp van stalen staven volgens Eurocode 3

Project: | Model: Fastned 4.0-definitief | Datum: 25-07-2017
Fastned 4.0

1.1 ALGEMENE GEGEVENS

Te ontwerpen staven:	11,13,15,17-29,40,42,44,46-58
Te ontwerpen staafverz.:	1-8
Nationale bijlagen:	CEN
Ontwerp uiterste grenstoestand	
Te berekenen RC's:	RC1 ULS omhullend

1.2 MATERIALEN

Matl. No.	Materiaal Omschrijving	E-Modulus E [kN/cm²]	Glijdingsmodulus G [kN/cm²]	Coëff. van Poisson ν [-]	Vloeispanning f_{yk} [kN/cm²]	Max. Dikte t [mm]
5	Staal S 355 | DIN EN 1993-1-1:2010-12	21000.00	8100.00	0.300	35.50	40.0
					33.50	80.0
					31.50	100.0
					29.50	150.0
					28.50	200.0
					27.50	250.0

1.3 DOORSNEDES

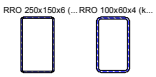

Snede No.	Matl. No.	Doorsnede Omschrijving	Doorsnede Type	Max Ontwerp Unity check	Commentaar
15	5	RRO 250x150x6 (koudgevormd)	Vierkant Gewalst	0.30	
17	5	RRO 100x60x4 (koudgevormd)	Vierkant Gewalst	0.40	

1.5 KNIKLENGTES - STAVEN

Staaf	Knik	Knik om y-as			Knik om z-as			Kip				
No.	Mogelijk	Mogelijk	$k_{cr,y}$	$L_{cr,y}$ [m]	Mogelijk	$k_{cr,z}$	$L_{cr,z}$ [m]	Mogelijk	k_z	k_w	L_w [m]	L_T [m]
11	☒	☒	1.00	3.260	☒	1.00	3.260	☐	1.0	1.0	3.260	3.260
13	☒	☒	1.00	3.260	☒	1.00	3.260	☐	1.0	1.0	3.260	3.260
15	☒	☒	1.00	3.260	☒	1.00	3.260	☐	1.0	1.0	3.260	3.260
17	☒	☒	1.00	3.260	☒	1.00	3.260	☐	1.0	1.0	3.260	3.260
18	☒	☒	1.00	3.260	☒	1.00	3.260	☐	1.0	1.0	3.260	3.260
19	☒	☒	1.00	3.260	☒	1.00	3.260	☐	1.0	1.0	3.260	3.260
20	☒	☒	1.00	3.260	☒	1.00	3.260	☐	1.0	1.0	3.260	3.260
21	☒	☒	1.00	3.260	☒	1.00	3.260	☐	1.0	1.0	3.260	3.260
22	☒	☒	1.00	3.260	☒	1.00	3.260	☐	1.0	1.0	3.260	3.260
23	☒	☒	1.00	3.260	☒	1.00	3.260	☐	1.0	1.0	3.260	3.260
24	☒	☒	1.00	3.260	☒	1.00	3.260	☐	1.0	1.0	3.260	3.260
25	☒	☒	1.00	3.260	☒	1.00	3.260	☐	1.0	1.0	3.260	3.260
26	☒	☒	1.00	3.260	☒	1.00	3.260	☐	1.0	1.0	3.260	3.260
27	☒	☒	1.00	3.260	☒	1.00	3.260	☐	1.0	1.0	3.260	3.260
28	☒	☒	1.00	3.260	☒	1.00	3.260	☐	1.0	1.0	3.260	3.260
29	☒	☒	1.00	3.260	☒	1.00	3.260	☐	1.0	1.0	3.260	3.260
40	☒	☒	1.00	3.260	☒	1.00	3.260	☐	1.0	1.0	3.260	3.260
42	☒	☒	1.00	3.260	☒	1.00	3.260	☐	1.0	1.0	3.260	3.260
44	☒	☒	1.00	3.260	☒	1.00	3.260	☐	1.0	1.0	3.260	3.260
46	☒	☒	1.00	3.260	☒	1.00	3.260	☐	1.0	1.0	3.260	3.260
47	☒	☒	1.00	3.260	☒	1.00	3.260	☐	1.0	1.0	3.260	3.260
48	☒	☒	1.00	3.260	☒	1.00	3.260	☐	1.0	1.0	3.260	3.260
49	☒	☒	1.00	3.260	☒	1.00	3.260	☐	1.0	1.0	3.260	3.260
50	☒	☒	1.00	3.260	☒	1.00	3.260	☐	1.0	1.0	3.260	3.260
51	☒	☒	1.00	3.260	☒	1.00	3.260	☐	1.0	1.0	3.260	3.260
52	☒	☒	1.00	3.260	☒	1.00	3.260	☐	1.0	1.0	3.260	3.260
53	☒	☒	1.00	3.260	☒	1.00	3.260	☐	1.0	1.0	3.260	3.260
54	☒	☒	1.00	3.260	☒	1.00	3.260	☐	1.0	1.0	3.260	3.260
55	☒	☒	1.00	3.260	☒	1.00	3.260	☐	1.0	1.0	3.260	3.260
56	☒	☒	1.00	3.260	☒	1.00	3.260	☐	1.0	1.0	3.260	3.260
57	☒	☒	1.00	3.260	☒	1.00	3.260	☐	1.0	1.0	3.260	3.260
58	☒	☒	1.00	3.260	☒	1.00	3.260	☐	1.0	1.0	3.260	3.260

1.6 KNIKLENGTES - STAAFVERZAMELINGEN

Staafverz	Knik	Knik om y-as			Knik om z-as			Kip				
No.	Mogelijk	Mogelijk	$k_{cr,y}$	$L_{cr,y}$ [m]	Mogelijk	$k_{cr,z}$	$L_{cr,z}$ [m]	Mogelijk	k_z	k_w	L_w [m]	L_T [m]
1	☒	☒	1.00	5.160	☒	1.00	5.160	☐	1.0	1.0	5.160	5.160
2	☒	☒	1.00	5.160	☒	1.00	5.160	☐	1.0	1.0	5.160	5.160
3	☒	☒	1.00	5.160	☒	1.00	5.160	☐	1.0	1.0	5.160	5.160
4	☒	☒	1.00	5.160	☒	1.00	5.160	☐	1.0	1.0	5.160	5.160
5	☒	☒	1.00	5.160	☒	1.00	5.160	☐	1.0	1.0	5.160	5.160
6	☒	☒	1.00	5.160	☒	1.00	5.160	☐	1.0	1.0	5.160	5.160
7	☒	☒	1.00	5.160	☒	1.00	5.160	☐	1.0	1.0	5.160	5.160
8	☒	☒	1.00	5.160	☒	1.00	5.160	☐	1.0	1.0	5.160	5.160

1.7 STEUNPUNTEN

No.	Knopen No.	Stn.pnt. Rotatie β [°]	Zijdelingse verhinderi $u_{Y'}$	Verhindering $\varphi_{X'}$	Verhindering $\varphi_{Z'}$	Welving Verhindering ω	Excentriciteit $e_{X'}$ [mm]	Excentriciteit $e_{Z'}$ [mm]	Commentaar
	No. staafverzameling 1 - Doorgaande staven 1								
1	46	0.00	☒	☒	☐	☐	0.0	0.0	
2	42	0.00	☒	☒	☐	☐	0.0	0.0	
	No. staafverzameling 2 - Doorgaande staven 2								
1	46	0.00	☒	☒	☐	☐	0.0	0.0	
2	47	0.00	☒	☒	☐	☐	0.0	0.0	
	No. staafverzameling 3 - Doorgaande staven 3								
1	39	0.00	☒	☒	☐	☐	0.0	0.0	
2	38	0.00	☒	☒	☐	☐	0.0	0.0	
	No. staafverzameling 4 - Doorgaande staven 4								
1	39	0.00	☒	☒	☐	☐	0.0	0.0	
2	40	0.00	☒	☒	☐	☐	0.0	0.0	
	No. staafverzameling 5 - Doorgaande staven 5								
1	12	0.00	☒	☒	☐	☐	0.0	0.0	
2	11	0.00	☒	☒	☐	☐	0.0	0.0	
	No. staafverzameling 6 - Doorgaande staven 6								
1	12	0.00	☒	☒	☐	☐	0.0	0.0	
2	13	0.00	☒	☒	☐	☐	0.0	0.0	
	No. staafverzameling 7 - Doorgaande staven 7								
1	7	0.00	☒	☒	☐	☐	0.0	0.0	
2	6	0.00	☒	☒	☐	☐	0.0	0.0	
	No. staafverzameling 8 - Doorgaande staven 8								
1	7	0.00	☒	☒	☐	☐	0.0	0.0	
2	8	0.00	☒	☒	☐	☐	0.0	0.0	

1.12 PARAMETERS - STAVEN

Staaf No.	Omschrijving	Parameter
11	Doorsnede	15 - RRO 250x150x6 (koudgevormd)
	Afschuifvlak	☐
	Rotatieverhindering	☐
	Oppervlakte van de dwarsdoorsnede voor trekberekening	☐
13	Doorsnede	15 - RRO 250x150x6 (koudgevormd)
	Afschuifvlak	☐
	Rotatieverhindering	☐
	Oppervlakte van de dwarsdoorsnede voor trekberekening	☐
15	Doorsnede	15 - RRO 250x150x6 (koudgevormd)
	Afschuifvlak	☐
	Rotatieverhindering	☐
	Oppervlakte van de dwarsdoorsnede voor trekberekening	☐
17	Doorsnede	15 - RRO 250x150x6 (koudgevormd)
	Afschuifvlak	☐
	Rotatieverhindering	☐
	Oppervlakte van de dwarsdoorsnede voor trekberekening	☐
18	Doorsnede	17 - RRO 100x60x4 (koudgevormd)
	Afschuifvlak	☐
	Rotatieverhindering	☐
	Oppervlakte van de dwarsdoorsnede voor trekberekening	☐
19	Doorsnede	17 - RRO 100x60x4 (koudgevormd)
	Afschuifvlak	☐
	Rotatieverhindering	☐
	Oppervlakte van de dwarsdoorsnede voor trekberekening	☐
20	Doorsnede	17 - RRO 100x60x4 (koudgevormd)
	Afschuifvlak	☐
	Rotatieverhindering	☐
	Oppervlakte van de dwarsdoorsnede voor trekberekening	☐
21	Doorsnede	17 - RRO 100x60x4 (koudgevormd)
	Afschuifvlak	☐
	Rotatieverhindering	☐
	Oppervlakte van de dwarsdoorsnede voor trekberekening	☐
22	Doorsnede	17 - RRO 100x60x4 (koudgevormd)
	Afschuifvlak	☐
	Rotatieverhindering	☐
	Oppervlakte van de dwarsdoorsnede voor trekberekening	☐
23	Doorsnede	17 - RRO 100x60x4 (koudgevormd)
	Afschuifvlak	☐
	Rotatieverhindering	☐
	Oppervlakte van de dwarsdoorsnede voor trekberekening	☐
24	Doorsnede	17 - RRO 100x60x4 (koudgevormd)
	Afschuifvlak	☐
	Rotatieverhindering	☐
	Oppervlakte van de dwarsdoorsnede voor trekberekening	☐
25	Doorsnede	17 - RRO 100x60x4 (koudgevormd)
	Afschuifvlak	☐
	Rotatieverhindering	☐
	Oppervlakte van de dwarsdoorsnede voor trekberekening	☐
26	Doorsnede	17 - RRO 100x60x4 (koudgevormd)

1.12 PARAMETERS - STAVEN

Staaf No.	Omschrijving	Parameter
	Afschuifvlak	☐
	Rotatieverhindering	☐
	Oppervlakte van de dwarsdoorsnede voor trekberekening	☐
27	Doorsnede	17 - RRO 100x60x4 (koudgevormd)
	Afschuifvlak	☐
	Rotatieverhindering	☐
	Oppervlakte van de dwarsdoorsnede voor trekberekening	☐
28	Doorsnede	17 - RRO 100x60x4 (koudgevormd)
	Afschuifvlak	☐
	Rotatieverhindering	☐
	Oppervlakte van de dwarsdoorsnede voor trekberekening	☐
29	Doorsnede	17 - RRO 100x60x4 (koudgevormd)
	Afschuifvlak	☐
	Rotatieverhindering	☐
	Oppervlakte van de dwarsdoorsnede voor trekberekening	☐
40	Doorsnede	15 - RRO 250x150x6 (koudgevormd)
	Afschuifvlak	☐
	Rotatieverhindering	☐
	Oppervlakte van de dwarsdoorsnede voor trekberekening	☐
42	Doorsnede	15 - RRO 250x150x6 (koudgevormd)
	Afschuifvlak	☐
	Rotatieverhindering	☐
	Oppervlakte van de dwarsdoorsnede voor trekberekening	☐
44	Doorsnede	15 - RRO 250x150x6 (koudgevormd)
	Afschuifvlak	☐
	Rotatieverhindering	☐
	Oppervlakte van de dwarsdoorsnede voor trekberekening	☐
46	Doorsnede	15 - RRO 250x150x6 (koudgevormd)
	Afschuifvlak	☐
	Rotatieverhindering	☐
	Oppervlakte van de dwarsdoorsnede voor trekberekening	☐
47	Doorsnede	17 - RRO 100x60x4 (koudgevormd)
	Afschuifvlak	☐
	Rotatieverhindering	☐
	Oppervlakte van de dwarsdoorsnede voor trekberekening	☐
48	Doorsnede	17 - RRO 100x60x4 (koudgevormd)
	Afschuifvlak	☐
	Rotatieverhindering	☐
	Oppervlakte van de dwarsdoorsnede voor trekberekening	☐
49	Doorsnede	17 - RRO 100x60x4 (koudgevormd)
	Afschuifvlak	☐
	Rotatieverhindering	☐
	Oppervlakte van de dwarsdoorsnede voor trekberekening	☐
50	Doorsnede	17 - RRO 100x60x4 (koudgevormd)
	Afschuifvlak	☐
	Rotatieverhindering	☐
	Oppervlakte van de dwarsdoorsnede voor trekberekening	☐
51	Doorsnede	17 - RRO 100x60x4 (koudgevormd)
	Afschuifvlak	☐
	Rotatieverhindering	☐
	Oppervlakte van de dwarsdoorsnede voor trekberekening	☐
52	Doorsnede	17 - RRO 100x60x4 (koudgevormd)
	Afschuifvlak	☐
	Rotatieverhindering	☐
	Oppervlakte van de dwarsdoorsnede voor trekberekening	☐
53	Doorsnede	17 - RRO 100x60x4 (koudgevormd)
	Afschuifvlak	☐
	Rotatieverhindering	☐
	Oppervlakte van de dwarsdoorsnede voor trekberekening	☐
54	Doorsnede	17 - RRO 100x60x4 (koudgevormd)
	Afschuifvlak	☐
	Rotatieverhindering	☐
	Oppervlakte van de dwarsdoorsnede voor trekberekening	☐
55	Doorsnede	17 - RRO 100x60x4 (koudgevormd)
	Afschuifvlak	☐
	Rotatieverhindering	☐
	Oppervlakte van de dwarsdoorsnede voor trekberekening	☐
56	Doorsnede	17 - RRO 100x60x4 (koudgevormd)
	Afschuifvlak	☐
	Rotatieverhindering	☐
	Oppervlakte van de dwarsdoorsnede voor trekberekening	☐
57	Doorsnede	17 - RRO 100x60x4 (koudgevormd)
	Afschuifvlak	☐
	Rotatieverhindering	☐

1.12 PARAMETERS - STAVEN

Staaf No.	Omschrijving	Parameter
	Oppervlakte van de dwarsdoorsnede voor trekberekening	☐
58	Doorsnede	17 - RRO 100x60x4 (koudgevormd)
	Afschuifvlak	☐
	Rotatieverhindering	☐
	Oppervlakte van de dwarsdoorsnede voor trekberekening	☐

1.13 PARAMETERS - STAAFVERZAMELINGEN

Staafverz No.	Omschrijving	Parameter
1	Staafverzameling	Doorgaande staven 1
	Doorsnede	15 - RRO 250x150x6 (koudgevormd)
	Afschuifvlak	☐
	Rotatieverhindering	☐
2	Staafverzameling	Doorgaande staven 2
	Doorsnede	15 - RRO 250x150x6 (koudgevormd)
	Afschuifvlak	☐
	Rotatieverhindering	☐
3	Staafverzameling	Doorgaande staven 3
	Doorsnede	15 - RRO 250x150x6 (koudgevormd)
	Afschuifvlak	☐
	Rotatieverhindering	☐
4	Staafverzameling	Doorgaande staven 4
	Doorsnede	15 - RRO 250x150x6 (koudgevormd)
	Afschuifvlak	☐
	Rotatieverhindering	☐
5	Staafverzameling	Doorgaande staven 5
	Doorsnede	15 - RRO 250x150x6 (koudgevormd)
	Afschuifvlak	☐
	Rotatieverhindering	☐
6	Staafverzameling	Doorgaande staven 6
	Doorsnede	15 - RRO 250x150x6 (koudgevormd)
	Afschuifvlak	☐
	Rotatieverhindering	☐
7	Staafverzameling	Doorgaande staven 7
	Doorsnede	15 - RRO 250x150x6 (koudgevormd)
	Afschuifvlak	☐
	Rotatieverhindering	☐
8	Staafverzameling	Doorgaande staven 8
	Doorsnede	15 - RRO 250x150x6 (koudgevormd)
	Afschuifvlak	☐
	Rotatieverhindering	☐

2.3 BEREKENING PER STAAFVERZAMELING

Staafverz No.	Staaf No.	Positie x [m]	BG/BC/ RC	Berekening		Berekenin No.	Omschrijving
1	Doorgaande staven 1 (staaf No. 43,98-100)						
	99	1.290	RC1	0.00	≤ 1	101)	Doorsnede - Trek volgens 6.2.3
	43	0.000	RC1	0.00	≤ 1	102)	Doorsnede - Druk volgens 6.2.4
	98	0.860	RC1	0.00	≤ 1	103)	Doorsnede - Druk volgens 6.2.4 - Klasse 4
	43	0.583	RC1	0.08	≤ 1	111)	Doorsnede - Buiging om y-as volgens 6.2.5 - Klasse 1 of 2
	99	0.583	RC1	0.01	≤ 1	117)	Doorsnede - Buiging om z-as volgens 6.2.5 - Klasse 3
	43	0.000	RC1	0.04	≤ 1	121)	Doorsnede - Dwarskracht in z-as volgens 6.2.6
	98	0.860	RC1	0.02	≤ 1	122)	Doorsnede - Dwarskracht in z-as volgens 6.2.6(4) - Klasse 3 of 4
	100	0.000	RC1	0.04	≤ 1	123)	Doorsnede - Dwarskracht in y-as volgens 6.2.6
	100	0.583	RC1	0.04	≤ 1	124)	Doorsnede - Dwarskracht in y-as volgens 6.2.6(4) - Klasse 3 of 4
	43	0.000	RC1	0.00	≤ 1	126)	Doorsnede - Plooien door buiging volgens 6.2.6(6)
	43	0.583	RC1	0.08	≤ 1	141)	Doorsnede - Buiging en afschuifkracht volgens 6.2.5 en 6.2.8
	99	0.583	RC1	0.01	≤ 1	152)	Doorsnede - Buiging om z-as en afschuifkracht volgens 6.2.9.2 en 6.2.10 - Klasse 3
	43	0.000	RC1	0.08	≤ 1	161)	Doorsnede - Dubbele buiging en afschuifkracht volgens 6.2.6, 6.2.7 en 6.2.9
	100	1.290	RC1	0.06	≤ 1	162)	Doorsnede - Dubbele buiging en afschuifkracht volgens 6.2.9.2 en 6.2.10 - Klasse 3
	43	0.000	RC1	0.09	≤ 1	181)	Doorsnede - Buiging, dwars- en normaalkracht volgens 6.2.9.1
	99	0.000	RC1	0.04	≤ 1	212)	Doorsnede - Buiging om z-as, afschuif- en normaalkracht volgens 6.2.10 en 6.2.9.3 - Klasse 4 - Hoekprofiel
	43	0.000	RC1	0.13	≤ 1	221)	Doorsnede - Dubbele buiging, dwars- en normaalkracht volgens 6.2.10 en 6.2.9
	100	0.645	RC1	0.11	≤ 1	222)	Doorsnede - Dubbele buiging, dwars- en normaalkracht volgens 6.2.10 en 6.2.9 - Klasse 3
	100	1.290	RC1	0.20	≤ 1	232)	Doorsnede - Dubbele buiging, dwars- en normaalkracht v

2.3 BEREKENING PER STAAFVERZAMELING

Staafverz No.	Staaf No.	Positie x [m]	BG/BC/ RC	Berekening		Berekenin No.	Omschrijving
							volgens 6.2.10 en 6.2.9.3 - Klasse 4 - Hoekprofiel
	100	1.290	RC1	0.07	≤ 1	255)	Doorsnede - Buiging om z-as en afschuiving volgens 6.2.10 en 6.2.9.3 - Klasse 4 - Hoekprofiel
	100	1.290	RC1	0.07	≤ 1	265)	Doorsnede - Dubbele buiging en afschuifkracht volgens 6.2.9.3 en 6.2.10 - Klasse 4 - Hoekprofiel
2	Doorgaande staven 2 (staaf No. 45,101-103)						
	102	1.290	RC1	0.00	≤ 1	101)	Doorsnede - Trek volgens 6.2.3
	45	0.000	RC1	0.00	≤ 1	102)	Doorsnede - Druk volgens 6.2.4
	101	0.860	RC1	0.00	≤ 1	103)	Doorsnede - Druk volgens 6.2.4 - Klasse 4
	101	0.000	RC1	0.02	≤ 1	111)	Doorsnede - Buiging om y-as volgens 6.2.5 - Klasse 1 of 2
	102	0.583	RC1	0.01	≤ 1	117)	Doorsnede - Buiging om z-as volgens 6.2.5 - Klasse 3
	45	0.000	RC1	0.04	≤ 1	121)	Doorsnede - Dwarskracht in z-as volgens 6.2.6
	101	0.583	RC1	0.02	≤ 1	122)	Doorsnede - Dwarskracht in z-as volgens 6.2.6(4) - Klasse 3 of 4
	103	0.000	RC1	0.04	≤ 1	123)	Doorsnede - Dwarskracht in y-as volgens 6.2.6
	103	0.583	RC1	0.04	≤ 1	124)	Doorsnede - Dwarskracht in y-as volgens 6.2.6(4) - Klasse 3 of 4
	45	0.000	RC1	0.00	≤ 1	126)	Doorsnede - Plooien door buiging volgens 6.2.6(6)
	101	0.000	RC1	0.02	≤ 1	141)	Doorsnede - Buiging en afschuifkracht volgens 6.2.5 en 6.2.8
	102	0.583	RC1	0.01	≤ 1	152)	Doorsnede - Buiging om z-as en afschuifkracht volgens 6.2.9.2 en 6.2.10 - Klasse 3
	45	0.000	RC1	0.08	≤ 1	161)	Doorsnede - Dubbele buiging en afschuifkracht volgens 6.2.6, 6.2.7 en 6.2.9
	45	1.290	RC1	0.06	≤ 1	162)	Doorsnede - Dubbele buiging en afschuifkracht volgens 6.2.9.2 en 6.2.10 - Klasse 3
	45	0.000	RC1	0.09	≤ 1	181)	Doorsnede - Buiging, dwars- en normaalkracht volgens 6.2.9.1
	102	0.000	RC1	0.04	≤ 1	212)	Doorsnede - Buiging om z-as, afschuif- en normaalkracht volgens 6.2.10 en 6.2.9.3 - Klasse 4 - Hoekprofiel
	45	0.000	RC1	0.13	≤ 1	221)	Doorsnede - Dubbele buiging, dwars- en normaalkracht volgens 6.2.10 en 6.2.9
	103	0.645	RC1	0.12	≤ 1	222)	Doorsnede - Dubbele buiging, dwars- en normaalkracht volgens 6.2.10 en 6.2.9 - Klasse 3
	103	1.290	RC1	0.21	≤ 1	232)	Doorsnede - Dubbele buiging, dwars- en normaalkracht volgens 6.2.10 en 6.2.9.3 - Klasse 4 - Hoekprofiel
	103	1.290	RC1	0.07	≤ 1	255)	Doorsnede - Buiging om z-as en afschuiving volgens 6.2.10 en 6.2.9.3 - Klasse 4 - Hoekprofiel
	103	1.290	RC1	0.08	≤ 1	265)	Doorsnede - Dubbele buiging en afschuifkracht volgens 6.2.9.3 en 6.2.10 - Klasse 4 - Hoekprofiel
3	Doorgaande staven 3 (staaf No. 39,92-94)						
	94	1.290	RC1	0.01	≤ 1	101)	Doorsnede - Trek volgens 6.2.3
	39	0.000	RC1	0.00	≤ 1	102)	Doorsnede - Druk volgens 6.2.4
	39	1.290	RC1	0.06	≤ 1	111)	Doorsnede - Buiging om y-as volgens 6.2.5 - Klasse 1 of 2
	94	0.000	RC1	0.01	≤ 1	117)	Doorsnede - Buiging om z-as volgens 6.2.5 - Klasse 3
	39	0.000	RC1	0.04	≤ 1	121)	Doorsnede - Dwarskracht in z-as volgens 6.2.6
	92	1.290	RC1	0.02	≤ 1	122)	Doorsnede - Dwarskracht in z-as volgens 6.2.6(4) - Klasse 3 of 4
	94	0.000	RC1	0.03	≤ 1	123)	Doorsnede - Dwarskracht in y-as volgens 6.2.6
	94	0.583	RC1	0.04	≤ 1	124)	Doorsnede - Dwarskracht in y-as volgens 6.2.6(4) - Klasse 3 of 4
	39	0.000	RC1	0.00	≤ 1	126)	Doorsnede - Plooien door buiging volgens 6.2.6(6)
	39	1.290	RC1	0.06	≤ 1	141)	Doorsnede - Buiging en afschuifkracht volgens 6.2.5 en 6.2.8
	94	0.000	RC1	0.01	≤ 1	152)	Doorsnede - Buiging om z-as en afschuifkracht volgens 6.2.9.2 en 6.2.10 - Klasse 3
	39	0.000	RC1	0.16	≤ 1	161)	Doorsnede - Dubbele buiging en afschuifkracht volgens 6.2.6, 6.2.7 en 6.2.9
	94	1.290	RC1	0.16	≤ 1	162)	Doorsnede - Dubbele buiging en afschuifkracht volgens 6.2.9.2 en 6.2.10 - Klasse 3
	39	0.583	RC1	0.19	≤ 1	181)	Doorsnede - Buiging, dwars- en normaalkracht volgens 6.2.9.1
	92	1.290	RC1	0.01	≤ 1	202)	Doorsnede - Buiging om z-as, afschuif- en normaalkracht volgens 6.2.9.2 - Klasse 3
	94	1.290	RC1	0.08	≤ 1	212)	Doorsnede - Buiging om z-as, afschuif- en normaalkracht volgens 6.2.10 en 6.2.9.3 - Klasse 4 - Hoekprofiel
	39	0.000	RC1	0.15	≤ 1	221)	Doorsnede - Dubbele buiging, dwars- en normaalkracht volgens 6.2.10 en 6.2.9
	94	1.290	RC1	0.16	≤ 1	222)	Doorsnede - Dubbele buiging, dwars- en normaalkracht volgens 6.2.10 en 6.2.9 - Klasse 3
	94	1.290	RC1	0.17	≤ 1	232)	Doorsnede - Dubbele buiging, dwars- en normaalkracht volgens 6.2.10 en 6.2.9.3 - Klasse 4 - Hoekprofiel
	92	1.290	RC1	0.03	≤ 1	255)	Doorsnede - Buiging om z-as en afschuiving volgens 6.2.10 en 6.2.9.3 - Klasse 4 - Hoekprofiel
	94	1.290	RC1	0.16	≤ 1	265)	Doorsnede - Dubbele buiging en afschuifkracht volgens 6.2.9.3 en 6.2.10 - Klasse 4 - Hoekprofiel
4	Doorgaande staven 4 (staaf No. 41,95-97)						
	97	1.290	RC1	0.01	≤ 1	101)	Doorsnede - Trek volgens 6.2.3
	41	0.000	RC1	0.00	≤ 1	102)	Doorsnede - Druk volgens 6.2.4
	41	0.000	RC1	0.04	≤ 1	121)	Doorsnede - Dwarskracht in z-as volgens 6.2.6
	95	1.290	RC1	0.02	≤ 1	122)	Doorsnede - Dwarskracht in z-as volgens 6.2.6(4) - K

2.3 BEREKENING PER STAAFVERZAMELING

Staafverz No.	Staaf No.	Positie x [m]	BG/BC/ RC	Berekening		Berekenin No.	Omschrijving
							Klasse 3 of 4
	97	0.000	RC1	0.03	≤ 1	123)	Doorsnede - Dwarskracht in y-as volgens 6.2.6
	97	0.583	RC1	0.04	≤ 1	124)	Doorsnede - Dwarskracht in y-as volgens 6.2.6(4) - Klasse 3 of 4
	41	0.000	RC1	0.00	≤ 1	126)	Doorsnede - Plooien door buiging volgens 6.2.6(6)
	41	0.000	RC1	0.16	≤ 1	161)	Doorsnede - Dubbele buiging en afschuifkracht volgens 6.2.6, 6.2.7 en 6.2.9
	97	1.290	RC1	0.13	≤ 1	162)	Doorsnede - Dubbele buiging en afschuifkracht volgens 6.2.9.2 en 6.2.10 - Klasse 3
	41	0.583	RC1	0.19	≤ 1	181)	Doorsnede - Buiging, dwars- en normaalkracht volgens 6.2.9.1
	97	1.290	RC1	0.05	≤ 1	212)	Doorsnede - Buiging om z-as, afschuif- en normaalkracht volgens 6.2.10 en 6.2.9.3 - Klasse 4 - Hoekprofiel
	41	0.000	RC1	0.15	≤ 1	221)	Doorsnede - Dubbele buiging, dwars- en normaalkracht volgens 6.2.10 en 6.2.9
	97	1.290	RC1	0.17	≤ 1	222)	Doorsnede - Dubbele buiging, dwars- en normaalkracht volgens 6.2.10 en 6.2.9 - Klasse 3
	97	1.290	RC1	0.17	≤ 1	232)	Doorsnede - Dubbele buiging, dwars- en normaalkracht volgens 6.2.10 en 6.2.9.3 - Klasse 4 - Hoekprofiel
	97	1.290	RC1	0.08	≤ 1	255)	Doorsnede - Buiging om z-as en afschuiving volgens 6.2.10 en 6.2.9.3 - Klasse 4 - Hoekprofiel
	97	1.290	RC1	0.16	≤ 1	265)	Doorsnede - Dubbele buiging en afschuifkracht volgens 6.2.9.3 en 6.2.10 - Klasse 4 - Hoekprofiel
5	Doorgaande staven 5 (staaf No. 14,80-82)						
	81	1.290	RC1	0.01	≤ 1	101)	Doorsnede - Trek volgens 6.2.3
	82	0.000	RC1	0.01	≤ 1	102)	Doorsnede - Druk volgens 6.2.4
	82	1.290	RC1	0.01	≤ 1	103)	Doorsnede - Druk volgens 6.2.4 - Klasse 4
	14	1.290	RC1	0.06	≤ 1	111)	Doorsnede - Buiging om y-as volgens 6.2.5 - Klasse 1 of 2
	82	0.000	RC1	0.01	≤ 1	117)	Doorsnede - Buiging om z-as volgens 6.2.5 - Klasse 3
	14	0.000	RC1	0.04	≤ 1	121)	Doorsnede - Dwarskracht in z-as volgens 6.2.6
	80	1.290	RC1	0.02	≤ 1	122)	Doorsnede - Dwarskracht in z-as volgens 6.2.6(4) - Klasse 3 of 4
	82	0.000	RC1	0.03	≤ 1	123)	Doorsnede - Dwarskracht in y-as volgens 6.2.6
	82	0.583	RC1	0.03	≤ 1	124)	Doorsnede - Dwarskracht in y-as volgens 6.2.6(4) - Klasse 3 of 4
	14	0.000	RC1	0.00	≤ 1	126)	Doorsnede - Plooien door buiging volgens 6.2.6(6)
	14	1.290	RC1	0.06	≤ 1	141)	Doorsnede - Buiging en afschuifkracht volgens 6.2.5 en 6.2.8
	82	0.000	RC1	0.01	≤ 1	152)	Doorsnede - Buiging om z-as en afschuifkracht volgens 6.2.9.2 en 6.2.10 - Klasse 3
	14	0.000	RC1	0.16	≤ 1	161)	Doorsnede - Dubbele buiging en afschuifkracht volgens 6.2.6, 6.2.7 en 6.2.9
	82	1.290	RC1	0.13	≤ 1	162)	Doorsnede - Dubbele buiging en afschuifkracht volgens 6.2.9.2 en 6.2.10 - Klasse 3
	80	0.000	RC1	0.11	≤ 1	181)	Doorsnede - Buiging, dwars- en normaalkracht volgens 6.2.9.1
	80	1.290	RC1	0.04	≤ 1	212)	Doorsnede - Buiging om z-as, afschuif- en normaalkracht volgens 6.2.10 en 6.2.9.3 - Klasse 4 - Hoekprofiel
	14	0.000	RC1	0.16	≤ 1	221)	Doorsnede - Dubbele buiging, dwars- en normaalkracht volgens 6.2.10 en 6.2.9
	82	1.290	RC1	0.16	≤ 1	222)	Doorsnede - Dubbele buiging, dwars- en normaalkracht volgens 6.2.10 en 6.2.9 - Klasse 3
	82	1.290	RC1	0.13	≤ 1	232)	Doorsnede - Dubbele buiging, dwars- en normaalkracht volgens 6.2.10 en 6.2.9.3 - Klasse 4 - Hoekprofiel
	82	1.290	RC1	0.06	≤ 1	255)	Doorsnede - Buiging om z-as en afschuiving volgens 6.2.10 en 6.2.9.3 - Klasse 4 - Hoekprofiel
	82	1.290	RC1	0.16	≤ 1	265)	Doorsnede - Dubbele buiging en afschuifkracht volgens 6.2.9.3 en 6.2.10 - Klasse 4 - Hoekprofiel
6	Doorgaande staven 6 (staaf No. 16,83-85)						
	84	1.290	RC1	0.01	≤ 1	101)	Doorsnede - Trek volgens 6.2.3
	16	0.000	RC1	0.01	≤ 1	102)	Doorsnede - Druk volgens 6.2.4
	85	1.290	RC1	0.01	≤ 1	103)	Doorsnede - Druk volgens 6.2.4 - Klasse 4
	84	1.290	RC1	0.02	≤ 1	111)	Doorsnede - Buiging om y-as volgens 6.2.5 - Klasse 1 of 2
	16	0.000	RC1	0.04	≤ 1	121)	Doorsnede - Dwarskracht in z-as volgens 6.2.6
	83	1.290	RC1	0.02	≤ 1	122)	Doorsnede - Dwarskracht in z-as volgens 6.2.6(4) - Klasse 3 of 4
	85	0.000	RC1	0.03	≤ 1	123)	Doorsnede - Dwarskracht in y-as volgens 6.2.6
	85	0.583	RC1	0.04	≤ 1	124)	Doorsnede - Dwarskracht in y-as volgens 6.2.6(4) - Klasse 3 of 4
	16	0.000	RC1	0.00	≤ 1	126)	Doorsnede - Plooien door buiging volgens 6.2.6(6)
	84	1.290	RC1	0.02	≤ 1	141)	Doorsnede - Buiging en afschuifkracht volgens 6.2.5 en 6.2.8
	16	0.000	RC1	0.16	≤ 1	161)	Doorsnede - Dubbele buiging en afschuifkracht volgens 6.2.6, 6.2.7 en 6.2.9
	85	1.290	RC1	0.17	≤ 1	162)	Doorsnede - Dubbele buiging en afschuifkracht volgens 6.2.9.2 en 6.2.10 - Klasse 3
	16	0.583	RC1	0.09	≤ 1	181)	Doorsnede - Buiging, dwars- en normaalkracht volgens 6.2.9.1
	83	1.290	RC1	0.04	≤ 1	212)	Doorsnede - Buiging om z-as, afschuif- en normaalkracht volgens 6.2.10 en 6.2.9.3 - Klasse 4 - Hoekprofiel
	16	0.000	RC1	0.16	≤ 1	221)	Doorsnede - Dubbele buiging, dwars- en normaalkracht volgens 6.2.10 en 6.2.9

2.3 BEREKENING PER STAAFVERZAMELING

Staafverz No.	Staaf No.	Positie x [m]	BG/BC/ RC	Berekening		Berekenin No.	Omschrijving
	85	1.290	RC1	0.17	≤ 1	222)	Doorsnede - Dubbele buiging, dwars- en normaalkracht volgens 6.2.10 en 6.2.9 - Klasse 3
	85	1.290	RC1	0.10	≤ 1	232)	Doorsnede - Dubbele buiging, dwars- en normaalkracht volgens 6.2.10 en 6.2.9.3 - Klasse 4 - Hoekprofiel
	85	1.290	RC1	0.06	≤ 1	255)	Doorsnede - Buiging om z-as en afschuiving volgens 6.2.10 en 6.2.9.3 - Klasse 4 - Hoekprofiel
	85	1.290	RC1	0.16	≤ 1	265)	Doorsnede - Dubbele buiging en afschuifkracht volgens 6.2.9.3 en 6.2.10 - Klasse 4 - Hoekprofiel
7	Doorgaande staven 7 (staaf No. 10,66-68)						
	67	1.290	RC1	0.00	≤ 1	101)	Doorsnede - Trek volgens 6.2.3
	10	0.000	RC1	0.00	≤ 1	102)	Doorsnede - Druk volgens 6.2.4
	66	0.860	RC1	0.00	≤ 1	103)	Doorsnede - Druk volgens 6.2.4 - Klasse 4
	10	0.583	RC1	0.03	≤ 1	111)	Doorsnede - Buiging om y-as volgens 6.2.5 - Klasse 1 of 2
	67	0.583	RC1	0.01	≤ 1	117)	Doorsnede - Buiging om z-as volgens 6.2.5 - Klasse 3
	10	0.000	RC1	0.04	≤ 1	121)	Doorsnede - Dwarskracht in z-as volgens 6.2.6
	66	0.860	RC1	0.02	≤ 1	122)	Doorsnede - Dwarskracht in z-as volgens 6.2.6(4) - Klasse 3 of 4
	68	0.000	RC1	0.04	≤ 1	123)	Doorsnede - Dwarskracht in y-as volgens 6.2.6
	68	0.583	RC1	0.04	≤ 1	124)	Doorsnede - Dwarskracht in y-as volgens 6.2.6(4) - Klasse 3 of 4
	10	0.000	RC1	0.00	≤ 1	126)	Doorsnede - Plooien door buiging volgens 6.2.6(6)
	10	0.583	RC1	0.03	≤ 1	141)	Doorsnede - Buiging en afschuifkracht volgens 6.2.5 en 6.2.8
	67	0.583	RC1	0.01	≤ 1	152)	Doorsnede - Buiging om z-as en afschuifkracht volgens 6.2.9.2 en 6.2.10 - Klasse 3
	10	0.000	RC1	0.04	≤ 1	161)	Doorsnede - Dubbele buiging en afschuifkracht volgens 6.2.6, 6.2.7 en 6.2.9
	10	0.000	RC1	0.06	≤ 1	162)	Doorsnede - Dubbele buiging en afschuifkracht volgens 6.2.9.2 en 6.2.10 - Klasse 3
	10	0.000	RC1	0.09	≤ 1	181)	Doorsnede - Buiging, dwars- en normaalkracht volgens 6.2.9.1
	67	0.000	RC1	0.04	≤ 1	212)	Doorsnede - Buiging om z-as, afschuif- en normaalkracht volgens 6.2.10 en 6.2.9.3 - Klasse 4 - Hoekprofiel
	10	0.000	RC1	0.14	≤ 1	221)	Doorsnede - Dubbele buiging, dwars- en normaalkracht volgens 6.2.10 en 6.2.9
	68	0.645	RC1	0.12	≤ 1	222)	Doorsnede - Dubbele buiging, dwars- en normaalkracht volgens 6.2.10 en 6.2.9 - Klasse 3
	68	1.290	RC1	0.21	≤ 1	232)	Doorsnede - Dubbele buiging, dwars- en normaalkracht volgens 6.2.10 en 6.2.9.3 - Klasse 4 - Hoekprofiel
	68	1.290	RC1	0.03	≤ 1	255)	Doorsnede - Buiging om z-as en afschuiving volgens 6.2.10 en 6.2.9.3 - Klasse 4 - Hoekprofiel
	68	1.290	RC1	0.09	≤ 1	265)	Doorsnede - Dubbele buiging en afschuifkracht volgens 6.2.9.3 en 6.2.10 - Klasse 4 - Hoekprofiel
8	Doorgaande staven 8 (staaf No. 12,77-79)						
	78	1.290	RC1	0.00	≤ 1	101)	Doorsnede - Trek volgens 6.2.3
	12	0.000	RC1	0.00	≤ 1	102)	Doorsnede - Druk volgens 6.2.4
	12	0.583	RC1	0.03	≤ 1	111)	Doorsnede - Buiging om y-as volgens 6.2.5 - Klasse 1 of 2
	78	0.583	RC1	0.01	≤ 1	117)	Doorsnede - Buiging om z-as volgens 6.2.5 - Klasse 3
	12	0.000	RC1	0.04	≤ 1	121)	Doorsnede - Dwarskracht in z-as volgens 6.2.6
	77	0.583	RC1	0.02	≤ 1	122)	Doorsnede - Dwarskracht in z-as volgens 6.2.6(4) - Klasse 3 of 4
	79	0.000	RC1	0.04	≤ 1	123)	Doorsnede - Dwarskracht in y-as volgens 6.2.6
	79	0.583	RC1	0.04	≤ 1	124)	Doorsnede - Dwarskracht in y-as volgens 6.2.6(4) - Klasse 3 of 4
	12	0.000	RC1	0.00	≤ 1	126)	Doorsnede - Plooien door buiging volgens 6.2.6(6)
	12	0.583	RC1	0.03	≤ 1	141)	Doorsnede - Buiging en afschuifkracht volgens 6.2.5 en 6.2.8
	78	0.583	RC1	0.01	≤ 1	152)	Doorsnede - Buiging om z-as en afschuifkracht volgens 6.2.9.2 en 6.2.10 - Klasse 3
	12	0.000	RC1	0.10	≤ 1	161)	Doorsnede - Dubbele buiging en afschuifkracht volgens 6.2.6, 6.2.7 en 6.2.9
	79	1.290	RC1	0.08	≤ 1	162)	Doorsnede - Dubbele buiging en afschuifkracht volgens 6.2.9.2 en 6.2.10 - Klasse 3
	12	0.000	RC1	0.09	≤ 1	181)	Doorsnede - Buiging, dwars- en normaalkracht volgens 6.2.9.1
	77	0.860	RC1	0.03	≤ 1	212)	Doorsnede - Buiging om z-as, afschuif- en normaalkracht volgens 6.2.10 en 6.2.9.3 - Klasse 4 - Hoekprofiel
	12	0.000	RC1	0.14	≤ 1	221)	Doorsnede - Dubbele buiging, dwars- en normaalkracht volgens 6.2.10 en 6.2.9
	79	0.645	RC1	0.12	≤ 1	222)	Doorsnede - Dubbele buiging, dwars- en normaalkracht volgens 6.2.10 en 6.2.9 - Klasse 3
	79	1.290	RC1	0.21	≤ 1	232)	Doorsnede - Dubbele buiging, dwars- en normaalkracht volgens 6.2.10 en 6.2.9.3 - Klasse 4 - Hoekprofiel
	79	1.290	RC1	0.09	≤ 1	255)	Doorsnede - Buiging om z-as en afschuiving volgens 6.2.10 en 6.2.9.3 - Klasse 4 - Hoekprofiel
	79	1.290	RC1	0.09	≤ 1	265)	Doorsnede - Dubbele buiging en afschuifkracht volgens 6.2.9.3 en 6.2.10 - Klasse 4 - Hoekprofiel

2.4 BEREKENING PER STAAF

Staaf No.	Positie x [m]	BG/BC/ RC	Berekening		Berekenin No.	Omschrijving
10	Doorsnede No. 15 - RRO 250x150x6 (koudgevormd)					
	1.290	RC1	0.00	≤ 1	101)	Doorsnede - Trek volgens 6.2.3
	0.000	RC1	0.00	≤ 1	102)	Doorsnede - Druk volgens 6.2.4
	0.583	RC1	0.03	≤ 1	111)	Doorsnede - Buiging om y-as volgens 6.2.5 - Klasse 1 of 2
	0.000	RC1	0.04	≤ 1	121)	Doorsnede - Dwarskracht in z-as volgens 6.2.6
	1.290	RC1	0.01	≤ 1	122)	Doorsnede - Dwarskracht in z-as volgens 6.2.6(4) - Klasse 3 of 4
	0.000	RC1	0.01	≤ 1	123)	Doorsnede - Dwarskracht in y-as volgens 6.2.6
	0.000	RC1	0.00	≤ 1	124)	Doorsnede - Dwarskracht in y-as volgens 6.2.6(4) - Klasse 3 of 4
	0.000	RC1	0.00	≤ 1	126)	Doorsnede - Plooien door buiging volgens 6.2.6(6)
	0.583	RC1	0.03	≤ 1	141)	Doorsnede - Buiging en afschuifkracht volgens 6.2.5 en 6.2.8
	0.000	RC1	0.04	≤ 1	161)	Doorsnede - Dubbele buiging en afschuifkracht volgens 6.2.6, 6.2.7 en 6.2.9
	0.000	RC1	0.06	≤ 1	162)	Doorsnede - Dubbele buiging en afschuifkracht volgens 6.2.9.2 en 6.2.10 - Klasse 3
	0.000	RC1	0.09	≤ 1	181)	Doorsnede - Buiging, dwars- en normaalkracht volgens 6.2.9.1
	0.000	RC1	0.14	≤ 1	221)	Doorsnede - Dubbele buiging, dwars- en normaalkracht volgens 6.2.10 en 6.2.9
11	Doorsnede No. 15 - RRO 250x150x6 (koudgevormd)					
	3.260	RC1	0.01	≤ 1	101)	Doorsnede - Trek volgens 6.2.3
	0.000	RC1	0.00	≤ 1	102)	Doorsnede - Druk volgens 6.2.4
	0.000	RC1	0.03	≤ 1	111)	Doorsnede - Buiging om y-as volgens 6.2.5 - Klasse 1 of 2
	2.716	RC1	0.01	≤ 1	117)	Doorsnede - Buiging om z-as volgens 6.2.5 - Klasse 3
	0.000	RC1	0.02	≤ 1	121)	Doorsnede - Dwarskracht in z-as volgens 6.2.6
	0.000	RC1	0.02	≤ 1	122)	Doorsnede - Dwarskracht in z-as volgens 6.2.6(4) - Klasse 3 of 4
	0.000	RC1	0.03	≤ 1	123)	Doorsnede - Dwarskracht in y-as volgens 6.2.6
	0.000	RC1	0.03	≤ 1	124)	Doorsnede - Dwarskracht in y-as volgens 6.2.6(4) - Klasse 3 of 4
	0.000	RC1	0.00	≤ 1	126)	Doorsnede - Plooien door buiging volgens 6.2.6(6)
	0.000	RC1	0.03	≤ 1	141)	Doorsnede - Buiging en afschuifkracht volgens 6.2.5 en 6.2.8
	2.716	RC1	0.01	≤ 1	152)	Doorsnede - Buiging om z-as en afschuifkracht volgens 6.2.9.2 en 6.2.10 - Klasse 3
	0.000	RC1	0.01	≤ 1	161)	Doorsnede - Dubbele buiging en afschuifkracht volgens 6.2.6, 6.2.7 en 6.2.9
	0.000	RC1	0.08	≤ 1	162)	Doorsnede - Dubbele buiging en afschuifkracht volgens 6.2.9.2 en 6.2.10 - Klasse 3
	1.630	RC1	0.01	≤ 1	181)	Doorsnede - Buiging, dwars- en normaalkracht volgens 6.2.9.1
	1.087	RC1	0.01	≤ 1	202)	Doorsnede - Buiging om z-as, afschuif- en normaalkracht volgens 6.2.9.2 - Klasse 3
	2.581	RC1	0.04	≤ 1	212)	Doorsnede - Buiging om z-as, afschuif- en normaalkracht volgens 6.2.10 en 6.2.9.3 - Klasse 4 - Hoekprofiel
	0.000	RC1	0.06	≤ 1	221)	Doorsnede - Dubbele buiging, dwars- en normaalkracht volgens 6.2.10 en 6.2.9
	3.260	RC1	0.26	≤ 1	222)	Doorsnede - Dubbele buiging, dwars- en normaalkracht volgens 6.2.10 en 6.2.9 - Klasse 3
	2.173	RC1	0.11	≤ 1	232)	Doorsnede - Dubbele buiging, dwars- en normaalkracht volgens 6.2.10 en 6.2.9.3 - Klasse 4 - Hoekprofiel
	2.716	RC1	0.03	≤ 1	255)	Doorsnede - Buiging om z-as en afschuiving volgens 6.2.10 en 6.2.9.3 - Klasse 4 - Hoekprofiel
	2.716	RC1	0.04	≤ 1	265)	Doorsnede - Dubbele buiging en afschuifkracht volgens 6.2.9.3 en 6.2.10 - Klasse 4 - Hoekprofiel
12	Doorsnede No. 15 - RRO 250x150x6 (koudgevormd)					
	1.290	RC1	0.00	≤ 1	101)	Doorsnede - Trek volgens 6.2.3
	0.000	RC1	0.00	≤ 1	102)	Doorsnede - Druk volgens 6.2.4
	0.583	RC1	0.03	≤ 1	111)	Doorsnede - Buiging om y-as volgens 6.2.5 - Klasse 1 of 2
	0.000	RC1	0.04	≤ 1	121)	Doorsnede - Dwarskracht in z-as volgens 6.2.6
	1.290	RC1	0.01	≤ 1	122)	Doorsnede - Dwarskracht in z-as volgens 6.2.6(4) - Klasse 3 of 4
	0.000	RC1	0.01	≤ 1	123)	Doorsnede - Dwarskracht in y-as volgens 6.2.6
	0.000	RC1	0.01	≤ 1	124)	Doorsnede - Dwarskracht in y-as volgens 6.2.6(4) - Klasse 3 of 4
	0.000	RC1	0.00	≤ 1	126)	Doorsnede - Plooien door buiging volgens 6.2.6(6)
	0.583	RC1	0.03	≤ 1	141)	Doorsnede - Buiging en afschuifkracht volgens 6.2.5 en 6.2.8
	0.000	RC1	0.10	≤ 1	161)	Doorsnede - Dubbele buiging en afschuifkracht volgens 6.2.6, 6.2.7 en 6.2.9
	0.000	RC1	0.07	≤ 1	162)	Doorsnede - Dubbele buiging en afschuifkracht volgens 6.2.9.2 en 6.2.10 - Klasse 3
	0.000	RC1	0.09	≤ 1	181)	Doorsnede - Buiging, dwars- en normaalkracht volgens 6.2.9.1
	0.000	RC1	0.14	≤ 1	221)	Doorsnede - Dubbele buiging, dwars- en normaalkracht volgens 6.2.10 en 6.2.9
	1.290	RC1	0.07	≤ 1	222)	Doorsnede - Dubbele buiging, dwars- en normaalkracht volgens 6.2.10 en 6.2.9 - Klasse 3
	0.645	RC1	0.01	≤ 1	255)	Doorsnede - Buiging om z-as en afschuiving volgens 6.2.10 en 6.2.9.3 - Klasse 4 - Hoekprofiel
13	Doorsnede No. 15 - RRO 250x150x6 (koudgevormd)					
	3.260	RC1	0.01	≤ 1	101)	Doorsnede - Trek volgens 6.2.3
	0.000	RC1	0.00	≤ 1	102)	Doorsnede - Druk volgens 6.2.4
	0.583	RC1	0.07	≤ 1	111)	Doorsnede - Buiging om y-as volgens 6.2.5 - Klasse 1 of 2
	3.260	RC1	0.01	≤ 1	117)	Doorsnede - Buiging om z-as volgens 6.2.5 - Klasse 3
	0.000	RC1	0.02	≤ 1	121)	Doorsnede - Dwarskracht in z-as volgens 6.2.6
	0.000	RC1	0.02	≤ 1	122)	Doorsnede - Dwarskracht in z-as volgens 6.2.6(4) - Klasse 3 of 4
	0.000	RC1	0.03	≤ 1	123)	Doorsnede - Dwarskracht in y-as volgens 6.2.6
	0.000	RC1	0.03	≤ 1	124)	Doorsnede - Dwarskracht in y-as volgens 6.2.6(4) - Klasse 3 of 4
	0.000	RC1	0.00	≤ 1	126)	Doorsnede - Plooien door buiging volgens 6.2.6(6)
	0.583	RC1	0.07	≤ 1	141)	Doorsnede - Buiging en afschuifkracht volgens 6.2.5 en 6.2.8
	3.260	RC1	0.01	≤ 1	152)	Doorsnede - Buiging om z-as en afschuifkracht volgens 6.2.9.2 en 6.2.10 - Klasse 3

2.4 BEREKENING PER STAAF

Staaf No.	Positie x [m]	BG/BC/ RC	Berekening		Berekenin No.	Omschrijving
	0.000	RC1	0.02	≤ 1	161)	Doorsnede - Dubbele buiging en afschuifkracht volgens 6.2.6, 6.2.7 en 6.2.9
	0.000	RC1	0.08	≤ 1	162)	Doorsnede - Dubbele buiging en afschuifkracht volgens 6.2.9.2 en 6.2.10 - Klasse 3
	1.630	RC1	0.01	≤ 1	181)	Doorsnede - Buiging, dwars- en normaalkracht volgens 6.2.9.1
	2.173	RC1	0.08	≤ 1	212)	Doorsnede - Buiging om z-as, afschuif- en normaalkracht volgens 6.2.10 en 6.2.9.3 - Klasse 4 - Hoekprofiel
	0.000	RC1	0.07	≤ 1	221)	Doorsnede - Dubbele buiging, dwars- en normaalkracht volgens 6.2.10 en 6.2.9
	0.000	RC1	0.30	≤ 1	222)	Doorsnede - Dubbele buiging, dwars- en normaalkracht volgens 6.2.10 en 6.2.9 - Klasse 3
	2.173	RC1	0.11	≤ 1	232)	Doorsnede - Dubbele buiging, dwars- en normaalkracht volgens 6.2.10 en 6.2.9.3 - Klasse 4 - Hoekprofiel
	2.716	RC1	0.01	≤ 1	255)	Doorsnede - Buiging om z-as en afschuiving volgens 6.2.10 en 6.2.9.3 - Klasse 4 - Hoekprofiel
14	Doorsnede No. 15 - RRO 250x150x6 (koudgevormd)					
	1.290	RC1	0.00	≤ 1	101)	Doorsnede - Trek volgens 6.2.3
	0.000	RC1	0.01	≤ 1	102)	Doorsnede - Druk volgens 6.2.4
	1.290	RC1	0.06	≤ 1	111)	Doorsnede - Buiging om y-as volgens 6.2.5 - Klasse 1 of 2
	0.000	RC1	0.04	≤ 1	121)	Doorsnede - Dwarskracht in z-as volgens 6.2.6
	1.290	RC1	0.01	≤ 1	122)	Doorsnede - Dwarskracht in z-as volgens 6.2.6(4) - Klasse 3 of 4
	0.000	RC1	0.01	≤ 1	123)	Doorsnede - Dwarskracht in y-as volgens 6.2.6
	1.290	RC1	0.01	≤ 1	124)	Doorsnede - Dwarskracht in y-as volgens 6.2.6(4) - Klasse 3 of 4
	0.000	RC1	0.00	≤ 1	126)	Doorsnede - Plooien door buiging volgens 6.2.6(6)
	1.290	RC1	0.06	≤ 1	141)	Doorsnede - Buiging en afschuifkracht volgens 6.2.5 en 6.2.8
	0.000	RC1	0.16	≤ 1	161)	Doorsnede - Dubbele buiging en afschuifkracht volgens 6.2.6, 6.2.7 en 6.2.9
	0.000	RC1	0.03	≤ 1	162)	Doorsnede - Dubbele buiging en afschuifkracht volgens 6.2.9.2 en 6.2.10 - Klasse 3
	1.290	RC1	0.11	≤ 1	181)	Doorsnede - Buiging, dwars- en normaalkracht volgens 6.2.9.1
	0.000	RC1	0.16	≤ 1	221)	Doorsnede - Dubbele buiging, dwars- en normaalkracht volgens 6.2.10 en 6.2.9
	1.290	RC1	0.05	≤ 1	222)	Doorsnede - Dubbele buiging, dwars- en normaalkracht volgens 6.2.10 en 6.2.9 - Klasse 3
15	Doorsnede No. 15 - RRO 250x150x6 (koudgevormd)					
	3.260	RC1	0.01	≤ 1	101)	Doorsnede - Trek volgens 6.2.3
	0.000	RC1	0.00	≤ 1	102)	Doorsnede - Druk volgens 6.2.4
	0.583	RC1	0.05	≤ 1	111)	Doorsnede - Buiging om y-as volgens 6.2.5 - Klasse 1 of 2
	1.630	RC1	0.01	≤ 1	117)	Doorsnede - Buiging om z-as volgens 6.2.5 - Klasse 3
	0.000	RC1	0.02	≤ 1	121)	Doorsnede - Dwarskracht in z-as volgens 6.2.6
	0.000	RC1	0.02	≤ 1	122)	Doorsnede - Dwarskracht in z-as volgens 6.2.6(4) - Klasse 3 of 4
	0.000	RC1	0.02	≤ 1	123)	Doorsnede - Dwarskracht in y-as volgens 6.2.6
	0.000	RC1	0.02	≤ 1	124)	Doorsnede - Dwarskracht in y-as volgens 6.2.6(4) - Klasse 3 of 4
	0.000	RC1	0.00	≤ 1	126)	Doorsnede - Plooien door buiging volgens 6.2.6(6)
	0.583	RC1	0.05	≤ 1	141)	Doorsnede - Buiging en afschuifkracht volgens 6.2.5 en 6.2.8
	1.630	RC1	0.01	≤ 1	152)	Doorsnede - Buiging om z-as en afschuifkracht volgens 6.2.9.2 en 6.2.10 - Klasse 3
	0.000	RC1	0.01	≤ 1	161)	Doorsnede - Dubbele buiging en afschuifkracht volgens 6.2.6, 6.2.7 en 6.2.9
	0.000	RC1	0.08	≤ 1	162)	Doorsnede - Dubbele buiging en afschuifkracht volgens 6.2.9.2 en 6.2.10 - Klasse 3
	1.630	RC1	0.02	≤ 1	181)	Doorsnede - Buiging, dwars- en normaalkracht volgens 6.2.9.1
	2.173	RC1	0.06	≤ 1	212)	Doorsnede - Buiging om z-as, afschuif- en normaalkracht volgens 6.2.10 en 6.2.9.3 - Klasse 4 - Hoekprofiel
	0.000	RC1	0.06	≤ 1	221)	Doorsnede - Dubbele buiging, dwars- en normaalkracht volgens 6.2.10 en 6.2.9
	0.000	RC1	0.24	≤ 1	222)	Doorsnede - Dubbele buiging, dwars- en normaalkracht volgens 6.2.10 en 6.2.9 - Klasse 3
	2.716	RC1	0.10	≤ 1	232)	Doorsnede - Dubbele buiging, dwars- en normaalkracht volgens 6.2.10 en 6.2.9.3 - Klasse 4 - Hoekprofiel
	1.087	RC1	0.02	≤ 1	255)	Doorsnede - Buiging om z-as en afschuiving volgens 6.2.10 en 6.2.9.3 - Klasse 4 - Hoekprofiel
	0.583	RC1	0.04	≤ 1	265)	Doorsnede - Dubbele buiging en afschuifkracht volgens 6.2.9.3 en 6.2.10 - Klasse 4 - Hoekprofiel
16	Doorsnede No. 15 - RRO 250x150x6 (koudgevormd)					
	1.290	RC1	0.00	≤ 1	101)	Doorsnede - Trek volgens 6.2.3
	0.000	RC1	0.01	≤ 1	102)	Doorsnede - Druk volgens 6.2.4
	0.000	RC1	0.04	≤ 1	121)	Doorsnede - Dwarskracht in z-as volgens 6.2.6
	1.290	RC1	0.01	≤ 1	122)	Doorsnede - Dwarskracht in z-as volgens 6.2.6(4) - Klasse 3 of 4
	0.000	RC1	0.01	≤ 1	123)	Doorsnede - Dwarskracht in y-as volgens 6.2.6
	1.290	RC1	0.01	≤ 1	124)	Doorsnede - Dwarskracht in y-as volgens 6.2.6(4) - Klasse 3 of 4
	0.000	RC1	0.00	≤ 1	126)	Doorsnede - Plooien door buiging volgens 6.2.6(6)
	0.000	RC1	0.16	≤ 1	161)	Doorsnede - Dubbele buiging en afschuifkracht volgens 6.2.6, 6.2.7 en 6.2.9
	1.290	RC1	0.04	≤ 1	162)	Doorsnede - Dubbele buiging en afschuifkracht volgens 6.2.9.2 en 6.2.10 - Klasse 3
	0.583	RC1	0.09	≤ 1	181)	Doorsnede - Buiging, dwars- en normaalkracht volgens 6.2.9.1
	0.000	RC1	0.16	≤ 1	221)	Doorsnede - Dubbele buiging, dwars- en normaalkracht volgens 6.2.10 en 6.2.9
	1.290	RC1	0.05	≤ 1	222)	Doorsnede - Dubbele buiging, dwars- en normaalkracht volgens 6.2.10 en 6.2.9 - Klasse 3
17	Doorsnede No. 15 - RRO 250x150x6 (koudgevormd)					
	3.260	RC1	0.01	≤ 1	101)	Doorsnede - Trek volgens 6.2.3
	0.000	RC1	0.00	≤ 1	102)	Doorsnede - Druk volgens 6.2.4

2.4 BEREKENING PER STAAF

Staaf No.	Positie x [m]	BG/BC/ RC	Berekening		Berekenin No.	Omschrijving
	0.583	RC1	0.07	≤ 1	111)	Doorsnede - Buiging om y-as volgens 6.2.5 - Klasse 1 of 2
	0.000	RC1	0.02	≤ 1	121)	Doorsnede - Dwarskracht in z-as volgens 6.2.6
	0.000	RC1	0.02	≤ 1	122)	Doorsnede - Dwarskracht in z-as volgens 6.2.6(4) - Klasse 3 of 4
	0.000	RC1	0.02	≤ 1	123)	Doorsnede - Dwarskracht in y-as volgens 6.2.6
	0.000	RC1	0.03	≤ 1	124)	Doorsnede - Dwarskracht in y-as volgens 6.2.6(4) - Klasse 3 of 4
	0.000	RC1	0.00	≤ 1	126)	Doorsnede - Plooien door buiging volgens 6.2.6(6)
	0.583	RC1	0.07	≤ 1	141)	Doorsnede - Buiging en afschuifkracht volgens 6.2.5 en 6.2.8
	0.000	RC1	0.02	≤ 1	161)	Doorsnede - Dubbele buiging en afschuifkracht volgens 6.2.6, 6.2.7 en 6.2.9
	0.000	RC1	0.08	≤ 1	162)	Doorsnede - Dubbele buiging en afschuifkracht volgens 6.2.9.2 en 6.2.10 - Klasse 3
	1.630	RC1	0.03	≤ 1	181)	Doorsnede - Buiging, dwars- en normaalkracht volgens 6.2.9.1
	2.173	RC1	0.07	≤ 1	212)	Doorsnede - Buiging om z-as, afschuif- en normaalkracht volgens 6.2.10 en 6.2.9.3 - Klasse 4 - Hoekprofiel
	0.000	RC1	0.06	≤ 1	221)	Doorsnede - Dubbele buiging, dwars- en normaalkracht volgens 6.2.10 en 6.2.9
	0.000	RC1	0.27	≤ 1	222)	Doorsnede - Dubbele buiging, dwars- en normaalkracht volgens 6.2.10 en 6.2.9 - Klasse 3
	2.716	RC1	0.12	≤ 1	232)	Doorsnede - Dubbele buiging, dwars- en normaalkracht volgens 6.2.10 en 6.2.9.3 - Klasse 4 - Hoekprofiel
18	Doorsnede No. 17 - RRO 100x60x4 (koudgevormd)					
	3.260	RC1	0.01	≤ 1	101)	Doorsnede - Trek volgens 6.2.3
	0.000	RC1	0.04	≤ 1	102)	Doorsnede - Druk volgens 6.2.4
	1.630	RC1	0.02	≤ 1	111)	Doorsnede - Buiging om y-as volgens 6.2.5 - Klasse 1 of 2
	0.000	RC1	0.03	≤ 1	116)	Doorsnede - Buiging om z-as volgens 6.2.5 - Klasse 1 of 2
	3.260	RC1	0.04	≤ 1	121)	Doorsnede - Dwarskracht in z-as volgens 6.2.6
	0.000	RC1	0.02	≤ 1	123)	Doorsnede - Dwarskracht in y-as volgens 6.2.6
	0.000	RC1	0.00	≤ 1	126)	Doorsnede - Plooien door buiging volgens 6.2.6(6)
	1.630	RC1	0.02	≤ 1	141)	Doorsnede - Buiging en afschuifkracht volgens 6.2.5 en 6.2.8
	0.000	RC1	0.03	≤ 1	151)	Doorsnede - Buiging om z-as en afschuifkracht volgens 6.2.5 en 6.2.8
	3.260	RC1	0.01	≤ 1	161)	Doorsnede - Dubbele buiging en afschuifkracht volgens 6.2.6, 6.2.7 en 6.2.9
	1.630	RC1	0.10	≤ 1	181)	Doorsnede - Buiging, dwars- en normaalkracht volgens 6.2.9.1
	0.000	RC1	0.21	≤ 1	201)	Doorsnede - Buiging om z-as, afschuif- en normaalkracht volgens 6.2.9.1
	3.260	RC1	0.11	≤ 1	221)	Doorsnede - Dubbele buiging, dwars- en normaalkracht volgens 6.2.10 en 6.2.9
	0.000	RC1	0.40	≤ 1	364)	Stabiliteit - Buiging en druk volgens 6.3.3, methode 2
19	Doorsnede No. 17 - RRO 100x60x4 (koudgevormd)					
	0.000	RC1	0.01	≤ 1	102)	Doorsnede - Druk volgens 6.2.4
	1.630	RC1	0.11	≤ 1	111)	Doorsnede - Buiging om y-as volgens 6.2.5 - Klasse 1 of 2
	0.000	RC1	0.04	≤ 1	116)	Doorsnede - Buiging om z-as volgens 6.2.5 - Klasse 1 of 2
	3.260	RC1	0.04	≤ 1	121)	Doorsnede - Dwarskracht in z-as volgens 6.2.6
	0.000	RC1	0.02	≤ 1	123)	Doorsnede - Dwarskracht in y-as volgens 6.2.6
	0.000	RC1	0.00	≤ 1	126)	Doorsnede - Plooien door buiging volgens 6.2.6(6)
	1.630	RC1	0.11	≤ 1	141)	Doorsnede - Buiging en afschuifkracht volgens 6.2.5 en 6.2.8
	0.000	RC1	0.04	≤ 1	151)	Doorsnede - Buiging om z-as en afschuifkracht volgens 6.2.5 en 6.2.8
	3.260	RC1	0.07	≤ 1	161)	Doorsnede - Dubbele buiging en afschuifkracht volgens 6.2.6, 6.2.7 en 6.2.9
	2.173	RC1	0.08	≤ 1	181)	Doorsnede - Buiging, dwars- en normaalkracht volgens 6.2.9.1
	0.000	RC1	0.20	≤ 1	201)	Doorsnede - Buiging om z-as, afschuif- en normaalkracht volgens 6.2.9.1
	1.630	RC1	0.12	≤ 1	221)	Doorsnede - Dubbele buiging, dwars- en normaalkracht volgens 6.2.10 en 6.2.9
	0.000	RC1	0.32	≤ 1	364)	Stabiliteit - Buiging en druk volgens 6.3.3, methode 2
20	Doorsnede No. 17 - RRO 100x60x4 (koudgevormd)					
	3.260	RC1	0.00	≤ 1	101)	Doorsnede - Trek volgens 6.2.3
	0.000	RC1	0.02	≤ 1	102)	Doorsnede - Druk volgens 6.2.4
	3.260	RC1	0.20	≤ 1	111)	Doorsnede - Buiging om y-as volgens 6.2.5 - Klasse 1 of 2
	0.000	RC1	0.04	≤ 1	116)	Doorsnede - Buiging om z-as volgens 6.2.5 - Klasse 1 of 2
	3.260	RC1	0.04	≤ 1	121)	Doorsnede - Dwarskracht in z-as volgens 6.2.6
	0.000	RC1	0.02	≤ 1	123)	Doorsnede - Dwarskracht in y-as volgens 6.2.6
	0.000	RC1	0.00	≤ 1	126)	Doorsnede - Plooien door buiging volgens 6.2.6(6)
	3.260	RC1	0.20	≤ 1	141)	Doorsnede - Buiging en afschuifkracht volgens 6.2.5 en 6.2.8
	0.000	RC1	0.04	≤ 1	151)	Doorsnede - Buiging om z-as en afschuifkracht volgens 6.2.5 en 6.2.8
	3.260	RC1	0.04	≤ 1	161)	Doorsnede - Dubbele buiging en afschuifkracht volgens 6.2.6, 6.2.7 en 6.2.9
	1.087	RC1	0.28	≤ 1	181)	Doorsnede - Buiging, dwars- en normaalkracht volgens 6.2.9.1
	0.000	RC1	0.16	≤ 1	201)	Doorsnede - Buiging om z-as, afschuif- en normaalkracht volgens 6.2.9.1
	1.630	RC1	0.13	≤ 1	221)	Doorsnede - Dubbele buiging, dwars- en normaalkracht volgens 6.2.10 en 6.2.9
	0.000	RC1	0.34	≤ 1	364)	Stabiliteit - Buiging en druk volgens 6.3.3, methode 2
21	Doorsnede No. 17 - RRO 100x60x4 (koudgevormd)					
	3.260	RC1	0.00	≤ 1	101)	Doorsnede - Trek volgens 6.2.3
	0.000	RC1	0.02	≤ 1	102)	Doorsnede - Druk volgens 6.2.4
	1.087	RC1	0.10	≤ 1	111)	Doorsnede - Buiging om y-as volgens 6.2.5 - Klasse 1 of 2
	0.000	RC1	0.05	≤ 1	116)	Doorsnede - Buiging om z-as volgens 6.2.5 - Klasse 1 of 2
	3.260	RC1	0.04	≤ 1	121)	Doorsnede - Dwarskracht in z-as volgens 6.2.6

2.4 BEREKENING PER STAAF

Staaf No.	Positie x [m]	BG/BC/ RC	Berekening		Berekenin No.	Omschrijving
	0.000	RC1	0.02	≤ 1	123)	Doorsnede - Dwarskracht in y-as volgens 6.2.6
	0.000	RC1	0.00	≤ 1	126)	Doorsnede - Plooien door buiging volgens 6.2.6(6)
	1.087	RC1	0.10	≤ 1	141)	Doorsnede - Buiging en afschuifkracht volgens 6.2.5 en 6.2.8
	0.000	RC1	0.05	≤ 1	151)	Doorsnede - Buiging om z-as en afschuifkracht volgens 6.2.5 en 6.2.8
	3.260	RC1	0.07	≤ 1	161)	Doorsnede - Dubbele buiging en afschuifkracht volgens 6.2.6, 6.2.7 en 6.2.9
	1.087	RC1	0.28	≤ 1	181)	Doorsnede - Buiging, dwars- en normaalkracht volgens 6.2.9.1
	0.000	RC1	0.16	≤ 1	201)	Doorsnede - Buiging om z-as, afschuif- en normaalkracht volgens 6.2.9.1
	1.630	RC1	0.13	≤ 1	221)	Doorsnede - Dubbele buiging, dwars- en normaalkracht volgens 6.2.10 en 6.2.9
	0.000	RC1	0.34	≤ 1	364)	Stabiliteit - Buiging en druk volgens 6.3.3, methode 2
22	Doorsnede No. 17 - RRO 100x60x4 (koudgevormd)					
	0.000	RC1	0.01	≤ 1	102)	Doorsnede - Druk volgens 6.2.4
	1.087	RC1	0.12	≤ 1	111)	Doorsnede - Buiging om y-as volgens 6.2.5 - Klasse 1 of 2
	0.000	RC1	0.03	≤ 1	116)	Doorsnede - Buiging om z-as volgens 6.2.5 - Klasse 1 of 2
	3.260	RC1	0.04	≤ 1	121)	Doorsnede - Dwarskracht in z-as volgens 6.2.6
	0.000	RC1	0.02	≤ 1	123)	Doorsnede - Dwarskracht in y-as volgens 6.2.6
	0.000	RC1	0.00	≤ 1	126)	Doorsnede - Plooien door buiging volgens 6.2.6(6)
	1.087	RC1	0.12	≤ 1	141)	Doorsnede - Buiging en afschuifkracht volgens 6.2.5 en 6.2.8
	0.000	RC1	0.03	≤ 1	151)	Doorsnede - Buiging om z-as en afschuifkracht volgens 6.2.5 en 6.2.8
	3.260	RC1	0.07	≤ 1	161)	Doorsnede - Dubbele buiging en afschuifkracht volgens 6.2.6, 6.2.7 en 6.2.9
	2.173	RC1	0.08	≤ 1	181)	Doorsnede - Buiging, dwars- en normaalkracht volgens 6.2.9.1
	0.000	RC1	0.20	≤ 1	201)	Doorsnede - Buiging om z-as, afschuif- en normaalkracht volgens 6.2.9.1
	1.630	RC1	0.12	≤ 1	221)	Doorsnede - Dubbele buiging, dwars- en normaalkracht volgens 6.2.10 en 6.2.9
	0.000	RC1	0.32	≤ 1	364)	Stabiliteit - Buiging en druk volgens 6.3.3, methode 2
23	Doorsnede No. 17 - RRO 100x60x4 (koudgevormd)					
	3.260	RC1	0.01	≤ 1	101)	Doorsnede - Trek volgens 6.2.3
	0.000	RC1	0.04	≤ 1	102)	Doorsnede - Druk volgens 6.2.4
	1.087	RC1	0.11	≤ 1	111)	Doorsnede - Buiging om y-as volgens 6.2.5 - Klasse 1 of 2
	0.000	RC1	0.02	≤ 1	116)	Doorsnede - Buiging om z-as volgens 6.2.5 - Klasse 1 of 2
	3.260	RC1	0.04	≤ 1	121)	Doorsnede - Dwarskracht in z-as volgens 6.2.6
	0.000	RC1	0.02	≤ 1	123)	Doorsnede - Dwarskracht in y-as volgens 6.2.6
	0.000	RC1	0.00	≤ 1	126)	Doorsnede - Plooien door buiging volgens 6.2.6(6)
	1.087	RC1	0.11	≤ 1	141)	Doorsnede - Buiging en afschuifkracht volgens 6.2.5 en 6.2.8
	0.000	RC1	0.02	≤ 1	151)	Doorsnede - Buiging om z-as en afschuifkracht volgens 6.2.5 en 6.2.8
	1.630	RC1	0.02	≤ 1	161)	Doorsnede - Dubbele buiging en afschuifkracht volgens 6.2.6, 6.2.7 en 6.2.9
	0.707	RC1	0.09	≤ 1	181)	Doorsnede - Buiging, dwars- en normaalkracht volgens 6.2.9.1
	0.000	RC1	0.21	≤ 1	201)	Doorsnede - Buiging om z-as, afschuif- en normaalkracht volgens 6.2.9.1
	3.260	RC1	0.11	≤ 1	221)	Doorsnede - Dubbele buiging, dwars- en normaalkracht volgens 6.2.10 en 6.2.9
	0.000	RC1	0.40	≤ 1	364)	Stabiliteit - Buiging en druk volgens 6.3.3, methode 2
24	Doorsnede No. 17 - RRO 100x60x4 (koudgevormd)					
	3.260	RC1	0.01	≤ 1	101)	Doorsnede - Trek volgens 6.2.3
	0.000	RC1	0.04	≤ 1	102)	Doorsnede - Druk volgens 6.2.4
	1.630	RC1	0.02	≤ 1	111)	Doorsnede - Buiging om y-as volgens 6.2.5 - Klasse 1 of 2
	0.000	RC1	0.02	≤ 1	116)	Doorsnede - Buiging om z-as volgens 6.2.5 - Klasse 1 of 2
	3.260	RC1	0.04	≤ 1	121)	Doorsnede - Dwarskracht in z-as volgens 6.2.6
	0.000	RC1	0.02	≤ 1	123)	Doorsnede - Dwarskracht in y-as volgens 6.2.6
	0.000	RC1	0.00	≤ 1	126)	Doorsnede - Plooien door buiging volgens 6.2.6(6)
	1.630	RC1	0.02	≤ 1	141)	Doorsnede - Buiging en afschuifkracht volgens 6.2.5 en 6.2.8
	0.000	RC1	0.02	≤ 1	151)	Doorsnede - Buiging om z-as en afschuifkracht volgens 6.2.5 en 6.2.8
	3.260	RC1	0.01	≤ 1	161)	Doorsnede - Dubbele buiging en afschuifkracht volgens 6.2.6, 6.2.7 en 6.2.9
	1.087	RC1	0.23	≤ 1	181)	Doorsnede - Buiging, dwars- en normaalkracht volgens 6.2.9.1
	0.000	RC1	0.15	≤ 1	201)	Doorsnede - Buiging om z-as, afschuif- en normaalkracht volgens 6.2.9.1
	3.260	RC1	0.11	≤ 1	221)	Doorsnede - Dubbele buiging, dwars- en normaalkracht volgens 6.2.10 en 6.2.9
	0.000	RC1	0.35	≤ 1	364)	Stabiliteit - Buiging en druk volgens 6.3.3, methode 2
25	Doorsnede No. 17 - RRO 100x60x4 (koudgevormd)					
	0.000	RC1	0.01	≤ 1	102)	Doorsnede - Druk volgens 6.2.4
	1.630	RC1	0.11	≤ 1	111)	Doorsnede - Buiging om y-as volgens 6.2.5 - Klasse 1 of 2
	0.000	RC1	0.04	≤ 1	116)	Doorsnede - Buiging om z-as volgens 6.2.5 - Klasse 1 of 2
	3.260	RC1	0.04	≤ 1	121)	Doorsnede - Dwarskracht in z-as volgens 6.2.6
	0.000	RC1	0.02	≤ 1	123)	Doorsnede - Dwarskracht in y-as volgens 6.2.6
	0.000	RC1	0.00	≤ 1	126)	Doorsnede - Plooien door buiging volgens 6.2.6(6)
	1.630	RC1	0.11	≤ 1	141)	Doorsnede - Buiging en afschuifkracht volgens 6.2.5 en 6.2.8
	0.000	RC1	0.04	≤ 1	151)	Doorsnede - Buiging om z-as en afschuifkracht volgens 6.2.5 en 6.2.8
	3.260	RC1	0.07	≤ 1	161)	Doorsnede - Dubbele buiging en afschuifkracht volgens 6.2.6, 6.2.7 en 6.2.9
	3.260	RC1	0.24	≤ 1	181)	Doorsnede - Buiging, dwars- en normaalkracht volgens 6.2.9.1
	0.000	RC1	0.14	≤ 1	201)	Doorsnede - Buiging om z-as, afschuif- en normaalkracht volgens 6

2.4 BEREKENING PER STAAF

Staaf No.	Positie x [m]	BG/BC/ RC	Berekening		Berekenin No.	Omschrijving
						6.2.9.1
	1.630	RC1	0.11	≤ 1	221)	Doorsnede - Dubbele buiging, dwars- en normaalkracht volgens 6.2.10 en 6.2.9
	0.000	RC1	0.30	≤ 1	364)	Stabiliteit - Buiging en druk volgens 6.3.3, methode 2
26	Doorsnede No. 17 - RRO 100x60x4 (koudgevormd)					
	3.260	RC1	0.01	≤ 1	101)	Doorsnede - Trek volgens 6.2.3
	0.000	RC1	0.01	≤ 1	102)	Doorsnede - Druk volgens 6.2.4
	3.260	RC1	0.14	≤ 1	111)	Doorsnede - Buiging om y-as volgens 6.2.5 - Klasse 1 of 2
	0.000	RC1	0.04	≤ 1	116)	Doorsnede - Buiging om z-as volgens 6.2.5 - Klasse 1 of 2
	3.260	RC1	0.04	≤ 1	121)	Doorsnede - Dwarskracht in z-as volgens 6.2.6
	0.000	RC1	0.02	≤ 1	123)	Doorsnede - Dwarskracht in y-as volgens 6.2.6
	0.000	RC1	0.00	≤ 1	126)	Doorsnede - Plooien door buiging volgens 6.2.6(6)
	3.260	RC1	0.14	≤ 1	141)	Doorsnede - Buiging en afschuifkracht volgens 6.2.5 en 6.2.8
	0.000	RC1	0.04	≤ 1	151)	Doorsnede - Buiging om z-as en afschuifkracht volgens 6.2.5 en 6.2.8
	3.260	RC1	0.12	≤ 1	161)	Doorsnede - Dubbele buiging en afschuifkracht volgens 6.2.6, 6.2.7 en 6.2.9
	1.087	RC1	0.11	≤ 1	181)	Doorsnede - Buiging, dwars- en normaalkracht volgens 6.2.9.1
	0.000	RC1	0.12	≤ 1	201)	Doorsnede - Buiging om z-as, afschuif- en normaalkracht volgens 6.2.9.1
	1.630	RC1	0.12	≤ 1	221)	Doorsnede - Dubbele buiging, dwars- en normaalkracht volgens 6.2.10 en 6.2.9
	0.000	RC1	0.30	≤ 1	364)	Stabiliteit - Buiging en druk volgens 6.3.3, methode 2
27	Doorsnede No. 17 - RRO 100x60x4 (koudgevormd)					
	3.260	RC1	0.01	≤ 1	101)	Doorsnede - Trek volgens 6.2.3
	0.000	RC1	0.01	≤ 1	102)	Doorsnede - Druk volgens 6.2.4
	3.260	RC1	0.10	≤ 1	111)	Doorsnede - Buiging om y-as volgens 6.2.5 - Klasse 1 of 2
	0.000	RC1	0.04	≤ 1	116)	Doorsnede - Buiging om z-as volgens 6.2.5 - Klasse 1 of 2
	3.260	RC1	0.04	≤ 1	121)	Doorsnede - Dwarskracht in z-as volgens 6.2.6
	0.000	RC1	0.02	≤ 1	123)	Doorsnede - Dwarskracht in y-as volgens 6.2.6
	0.000	RC1	0.00	≤ 1	126)	Doorsnede - Plooien door buiging volgens 6.2.6(6)
	3.260	RC1	0.10	≤ 1	141)	Doorsnede - Buiging en afschuifkracht volgens 6.2.5 en 6.2.8
	0.000	RC1	0.04	≤ 1	151)	Doorsnede - Buiging om z-as en afschuifkracht volgens 6.2.5 en 6.2.8
	3.260	RC1	0.12	≤ 1	161)	Doorsnede - Dubbele buiging en afschuifkracht volgens 6.2.6, 6.2.7 en 6.2.9
	0.707	RC1	0.17	≤ 1	181)	Doorsnede - Buiging, dwars- en normaalkracht volgens 6.2.9.1
	0.000	RC1	0.14	≤ 1	201)	Doorsnede - Buiging om z-as, afschuif- en normaalkracht volgens 6.2.9.1
	1.630	RC1	0.12	≤ 1	221)	Doorsnede - Dubbele buiging, dwars- en normaalkracht volgens 6.2.10 en 6.2.9
	0.000	RC1	0.30	≤ 1	364)	Stabiliteit - Buiging en druk volgens 6.3.3, methode 2
28	Doorsnede No. 17 - RRO 100x60x4 (koudgevormd)					
	0.000	RC1	0.01	≤ 1	102)	Doorsnede - Druk volgens 6.2.4
	1.087	RC1	0.12	≤ 1	111)	Doorsnede - Buiging om y-as volgens 6.2.5 - Klasse 1 of 2
	0.000	RC1	0.07	≤ 1	116)	Doorsnede - Buiging om z-as volgens 6.2.5 - Klasse 1 of 2
	3.260	RC1	0.04	≤ 1	121)	Doorsnede - Dwarskracht in z-as volgens 6.2.6
	0.000	RC1	0.02	≤ 1	123)	Doorsnede - Dwarskracht in y-as volgens 6.2.6
	0.000	RC1	0.00	≤ 1	126)	Doorsnede - Plooien door buiging volgens 6.2.6(6)
	1.087	RC1	0.12	≤ 1	141)	Doorsnede - Buiging en afschuifkracht volgens 6.2.5 en 6.2.8
	0.000	RC1	0.07	≤ 1	151)	Doorsnede - Buiging om z-as en afschuifkracht volgens 6.2.5 en 6.2.8
	3.260	RC1	0.07	≤ 1	161)	Doorsnede - Dubbele buiging en afschuifkracht volgens 6.2.6, 6.2.7 en 6.2.9
	3.260	RC1	0.23	≤ 1	181)	Doorsnede - Buiging, dwars- en normaalkracht volgens 6.2.9.1
	0.000	RC1	0.16	≤ 1	201)	Doorsnede - Buiging om z-as, afschuif- en normaalkracht volgens 6.2.9.1
	1.630	RC1	0.11	≤ 1	221)	Doorsnede - Dubbele buiging, dwars- en normaalkracht volgens 6.2.10 en 6.2.9
	0.000	RC1	0.30	≤ 1	364)	Stabiliteit - Buiging en druk volgens 6.3.3, methode 2
29	Doorsnede No. 17 - RRO 100x60x4 (koudgevormd)					
	3.260	RC1	0.01	≤ 1	101)	Doorsnede - Trek volgens 6.2.3
	0.000	RC1	0.04	≤ 1	102)	Doorsnede - Druk volgens 6.2.4
	0.000	RC1	0.02	≤ 1	116)	Doorsnede - Buiging om z-as volgens 6.2.5 - Klasse 1 of 2
	3.260	RC1	0.04	≤ 1	121)	Doorsnede - Dwarskracht in z-as volgens 6.2.6
	0.000	RC1	0.02	≤ 1	123)	Doorsnede - Dwarskracht in y-as volgens 6.2.6
	0.000	RC1	0.00	≤ 1	126)	Doorsnede - Plooien door buiging volgens 6.2.6(6)
	0.000	RC1	0.02	≤ 1	151)	Doorsnede - Buiging om z-as en afschuifkracht volgens 6.2.5 en 6.2.8
	1.087	RC1	0.23	≤ 1	181)	Doorsnede - Buiging, dwars- en normaalkracht volgens 6.2.9.1
	0.000	RC1	0.17	≤ 1	201)	Doorsnede - Buiging om z-as, afschuif- en normaalkracht volgens 6.2.9.1
	3.260	RC1	0.11	≤ 1	221)	Doorsnede - Dubbele buiging, dwars- en normaalkracht volgens 6.2.10 en 6.2.9
	0.000	RC1	0.36	≤ 1	364)	Stabiliteit - Buiging en druk volgens 6.3.3, methode 2
39	Doorsnede No. 15 - RRO 250x150x6 (koudgevormd)					
	1.290	RC1	0.00	≤ 1	101)	Doorsnede - Trek volgens 6.2.3
	0.000	RC1	0.00	≤ 1	102)	Doorsnede - Druk volgens 6.2.4
	1.290	RC1	0.06	≤ 1	111)	Doorsnede - Buiging om y-as volgens 6.2.5 - Klasse 1 of 2
	0.000	RC1	0.04	≤ 1	121)	Doorsnede - Dwarskracht in z-as volgens 6.2.6
	0.000	RC1	0.01	≤ 1	122)	Doorsnede - Dwarskracht in z-as volgens 6.2.6(4) - Klasse 3 of 4
	0.000	RC1	0.01	≤ 1	123)	Doorsnede - Dwarskracht in y-as volgens 6.2.6
	1.290	RC1	0.01	≤ 1	124)	Doorsnede - Dwarskracht in y-as volgens 6.2.6(4) - Klasse 3 of 4

2.4 BEREKENING PER STAAF

Staaf No.	Positie x [m]	BG/BC/ RC	Berekening		Berekenin No.	Omschrijving
	0.000	RC1	0.00	≤ 1	126)	Doorsnede - Plooien door buiging volgens 6.2.6(6)
	1.290	RC1	0.06	≤ 1	141)	Doorsnede - Buiging en afschuifkracht volgens 6.2.5 en 6.2.8
	0.000	RC1	0.16	≤ 1	161)	Doorsnede - Dubbele buiging en afschuifkracht volgens 6.2.6, 6.2.7 en 6.2.9
	0.583	RC1	0.19	≤ 1	181)	Doorsnede - Buiging, dwars- en normaalkracht volgens 6.2.9.1
	0.000	RC1	0.15	≤ 1	221)	Doorsnede - Dubbele buiging, dwars- en normaalkracht volgens 6.2.10 en 6.2.9
	0.000	RC1	0.10	≤ 1	222)	Doorsnede - Dubbele buiging, dwars- en normaalkracht volgens 6.2.10 en 6.2.9 - Klasse 3
40	Doorsnede No. 15 - RRO 250x150x6 (koudgevormd)					
	3.260	RC1	0.01	≤ 1	101)	Doorsnede - Trek volgens 6.2.3
	0.000	RC1	0.00	≤ 1	102)	Doorsnede - Druk volgens 6.2.4
	3.260	RC1	0.00	≤ 1	103)	Doorsnede - Druk volgens 6.2.4 - Klasse 4
	0.000	RC1	0.07	≤ 1	111)	Doorsnede - Buiging om y-as volgens 6.2.5 - Klasse 1 of 2
	0.000	RC1	0.02	≤ 1	121)	Doorsnede - Dwarskracht in z-as volgens 6.2.6
	0.000	RC1	0.02	≤ 1	122)	Doorsnede - Dwarskracht in z-as volgens 6.2.6(4) - Klasse 3 of 4
	0.000	RC1	0.02	≤ 1	123)	Doorsnede - Dwarskracht in y-as volgens 6.2.6
	0.000	RC1	0.02	≤ 1	124)	Doorsnede - Dwarskracht in y-as volgens 6.2.6(4) - Klasse 3 of 4
	0.000	RC1	0.00	≤ 1	126)	Doorsnede - Plooien door buiging volgens 6.2.6(6)
	0.000	RC1	0.07	≤ 1	141)	Doorsnede - Buiging en afschuifkracht volgens 6.2.5 en 6.2.8
	0.000	RC1	0.01	≤ 1	161)	Doorsnede - Dubbele buiging en afschuifkracht volgens 6.2.6, 6.2.7 en 6.2.9
	0.000	RC1	0.08	≤ 1	162)	Doorsnede - Dubbele buiging en afschuifkracht volgens 6.2.9.2 en 6.2.10 - Klasse 3
	1.630	RC1	0.00	≤ 1	181)	Doorsnede - Buiging, dwars- en normaalkracht volgens 6.2.9.1
	1.630	RC1	0.01	≤ 1	202)	Doorsnede - Buiging om z-as, afschuif- en normaalkracht volgens 6.2.9.2 - Klasse 3
	2.716	RC1	0.03	≤ 1	212)	Doorsnede - Buiging om z-as, afschuif- en normaalkracht volgens 6.2.10 en 6.2.9.3 - Klasse 4 - Hoekprofiel
	0.000	RC1	0.06	≤ 1	221)	Doorsnede - Dubbele buiging, dwars- en normaalkracht volgens 6.2.10 en 6.2.9
	0.000	RC1	0.25	≤ 1	222)	Doorsnede - Dubbele buiging, dwars- en normaalkracht volgens 6.2.10 en 6.2.9 - Klasse 3
	3.260	RC1	0.08	≤ 1	232)	Doorsnede - Dubbele buiging, dwars- en normaalkracht volgens 6.2.10 en 6.2.9.3 - Klasse 4 - Hoekprofiel
	2.716	RC1	0.02	≤ 1	255)	Doorsnede - Buiging om z-as en afschuiving volgens 6.2.10 en 6.2.9.3 - Klasse 4 - Hoekprofiel
	3.260	RC1	0.05	≤ 1	265)	Doorsnede - Dubbele buiging en afschuifkracht volgens 6.2.9.3 en 6.2.10 - Klasse 4 - Hoekprofiel
41	Doorsnede No. 15 - RRO 250x150x6 (koudgevormd)					
	1.290	RC1	0.00	≤ 1	101)	Doorsnede - Trek volgens 6.2.3
	0.000	RC1	0.00	≤ 1	102)	Doorsnede - Druk volgens 6.2.4
	0.000	RC1	0.04	≤ 1	121)	Doorsnede - Dwarskracht in z-as volgens 6.2.6
	1.290	RC1	0.01	≤ 1	122)	Doorsnede - Dwarskracht in z-as volgens 6.2.6(4) - Klasse 3 of 4
	0.000	RC1	0.01	≤ 1	123)	Doorsnede - Dwarskracht in y-as volgens 6.2.6
	0.000	RC1	0.01	≤ 1	124)	Doorsnede - Dwarskracht in y-as volgens 6.2.6(4) - Klasse 3 of 4
	0.000	RC1	0.00	≤ 1	126)	Doorsnede - Plooien door buiging volgens 6.2.6(6)
	0.000	RC1	0.16	≤ 1	161)	Doorsnede - Dubbele buiging en afschuifkracht volgens 6.2.6, 6.2.7 en 6.2.9
	1.290	RC1	0.06	≤ 1	162)	Doorsnede - Dubbele buiging en afschuifkracht volgens 6.2.9.2 en 6.2.10 - Klasse 3
	0.583	RC1	0.19	≤ 1	181)	Doorsnede - Buiging, dwars- en normaalkracht volgens 6.2.9.1
	0.000	RC1	0.15	≤ 1	221)	Doorsnede - Dubbele buiging, dwars- en normaalkracht volgens 6.2.10 en 6.2.9
	0.000	RC1	0.10	≤ 1	222)	Doorsnede - Dubbele buiging, dwars- en normaalkracht volgens 6.2.10 en 6.2.9 - Klasse 3
42	Doorsnede No. 15 - RRO 250x150x6 (koudgevormd)					
	3.260	RC1	0.01	≤ 1	101)	Doorsnede - Trek volgens 6.2.3
	0.000	RC1	0.00	≤ 1	102)	Doorsnede - Druk volgens 6.2.4
	0.583	RC1	0.07	≤ 1	111)	Doorsnede - Buiging om y-as volgens 6.2.5 - Klasse 1 of 2
	0.000	RC1	0.02	≤ 1	121)	Doorsnede - Dwarskracht in z-as volgens 6.2.6
	0.000	RC1	0.02	≤ 1	122)	Doorsnede - Dwarskracht in z-as volgens 6.2.6(4) - Klasse 3 of 4
	0.000	RC1	0.02	≤ 1	123)	Doorsnede - Dwarskracht in y-as volgens 6.2.6
	0.000	RC1	0.03	≤ 1	124)	Doorsnede - Dwarskracht in y-as volgens 6.2.6(4) - Klasse 3 of 4
	0.000	RC1	0.00	≤ 1	126)	Doorsnede - Plooien door buiging volgens 6.2.6(6)
	0.583	RC1	0.07	≤ 1	141)	Doorsnede - Buiging en afschuifkracht volgens 6.2.5 en 6.2.8
	0.000	RC1	0.02	≤ 1	161)	Doorsnede - Dubbele buiging en afschuifkracht volgens 6.2.6, 6.2.7 en 6.2.9
	0.000	RC1	0.09	≤ 1	162)	Doorsnede - Dubbele buiging en afschuifkracht volgens 6.2.9.2 en 6.2.10 - Klasse 3
	1.630	RC1	0.01	≤ 1	202)	Doorsnede - Buiging om z-as, afschuif- en normaalkracht volgens 6.2.9.2 - Klasse 3
	2.173	RC1	0.06	≤ 1	212)	Doorsnede - Buiging om z-as, afschuif- en normaalkracht volgens 6.2.10 en 6.2.9.3 - Klasse 4 - Hoekprofiel
	0.000	RC1	0.06	≤ 1	221)	Doorsnede - Dubbele buiging, dwars- en normaalkracht volgens 6.2.10 en 6.2.9
	0.000	RC1	0.27	≤ 1	222)	Doorsnede - Dubbele buiging, dwars- en normaalkracht volgens 6.2.10 en 6.2.9 - Klasse 3
	2.173	RC1	0.07	≤ 1	232)	Doorsnede - Dubbele buiging, dwars- en normaalkracht volgens 6.2.10 en 6.2.9.3 - Klasse 4 - Hoekprofiel
	3.260	RC1	0.06	≤ 1	265)	Doorsnede - Dubbele buiging en afschuifkracht volgens 6.2.9.3 en 6.2.10 - Klasse 4 - Hoekprofiel

2.4 BEREKENING PER STAAF

Staaf No.	Positie x [m]	BG/BC/ RC	Berekening		Berekenin No.	Omschrijving
43	Doorsnede No. 15 - RRO 250x150x6 (koudgevormd)					
	1.290	RC1	0.00	≤ 1	101)	Doorsnede - Trek volgens 6.2.3
	0.000	RC1	0.00	≤ 1	102)	Doorsnede - Druk volgens 6.2.4
	0.583	RC1	0.08	≤ 1	111)	Doorsnede - Buiging om y-as volgens 6.2.5 - Klasse 1 of 2
	0.000	RC1	0.04	≤ 1	121)	Doorsnede - Dwarskracht in z-as volgens 6.2.6
	1.290	RC1	0.01	≤ 1	122)	Doorsnede - Dwarskracht in z-as volgens 6.2.6(4) - Klasse 3 of 4
	0.000	RC1	0.00	≤ 1	123)	Doorsnede - Dwarskracht in y-as volgens 6.2.6
	0.000	RC1	0.00	≤ 1	126)	Doorsnede - Plooien door buiging volgens 6.2.6(6)
	0.583	RC1	0.08	≤ 1	141)	Doorsnede - Buiging en afschuifkracht volgens 6.2.5 en 6.2.8
	0.000	RC1	0.08	≤ 1	161)	Doorsnede - Dubbele buiging en afschuifkracht volgens 6.2.6, 6.2.7 en 6.2.9
	0.000	RC1	0.09	≤ 1	181)	Doorsnede - Buiging, dwars- en normaalkracht volgens 6.2.9.1
	0.000	RC1	0.13	≤ 1	221)	Doorsnede - Dubbele buiging, dwars- en normaalkracht volgens 6.2.10 en 6.2.9
	1.290	RC1	0.06	≤ 1	222)	Doorsnede - Dubbele buiging, dwars- en normaalkracht volgens 6.2.10 en 6.2.9 - Klasse 3
44	Doorsnede No. 15 - RRO 250x150x6 (koudgevormd)					
	3.260	RC1	0.01	≤ 1	101)	Doorsnede - Trek volgens 6.2.3
	0.000	RC1	0.00	≤ 1	102)	Doorsnede - Druk volgens 6.2.4
	0.583	RC1	0.05	≤ 1	111)	Doorsnede - Buiging om y-as volgens 6.2.5 - Klasse 1 of 2
	0.000	RC1	0.02	≤ 1	121)	Doorsnede - Dwarskracht in z-as volgens 6.2.6
	0.000	RC1	0.02	≤ 1	122)	Doorsnede - Dwarskracht in z-as volgens 6.2.6(4) - Klasse 3 of 4
	0.000	RC1	0.02	≤ 1	123)	Doorsnede - Dwarskracht in y-as volgens 6.2.6
	0.000	RC1	0.02	≤ 1	124)	Doorsnede - Dwarskracht in y-as volgens 6.2.6(4) - Klasse 3 of 4
	0.000	RC1	0.00	≤ 1	126)	Doorsnede - Plooien door buiging volgens 6.2.6(6)
	0.583	RC1	0.05	≤ 1	141)	Doorsnede - Buiging en afschuifkracht volgens 6.2.5 en 6.2.8
	0.000	RC1	0.01	≤ 1	161)	Doorsnede - Dubbele buiging en afschuifkracht volgens 6.2.6, 6.2.7 en 6.2.9
	0.000	RC1	0.08	≤ 1	162)	Doorsnede - Dubbele buiging en afschuifkracht volgens 6.2.9.2 en 6.2.10 - Klasse 3
	3.260	RC1	0.05	≤ 1	212)	Doorsnede - Buiging om z-as, afschuif- en normaalkracht volgens 6.2.10 en 6.2.9.3 - Klasse 4 - Hoekprofiel
	0.000	RC1	0.06	≤ 1	221)	Doorsnede - Dubbele buiging, dwars- en normaalkracht volgens 6.2.10 en 6.2.9
	0.000	RC1	0.25	≤ 1	222)	Doorsnede - Dubbele buiging, dwars- en normaalkracht volgens 6.2.10 en 6.2.9 - Klasse 3
	2.173	RC1	0.10	≤ 1	232)	Doorsnede - Dubbele buiging, dwars- en normaalkracht volgens 6.2.10 en 6.2.9.3 - Klasse 4 - Hoekprofiel
	2.716	RC1	0.01	≤ 1	255)	Doorsnede - Buiging om z-as en afschuiving volgens 6.2.10 en 6.2.9.3 - Klasse 4 - Hoekprofiel
	2.716	RC1	0.04	≤ 1	265)	Doorsnede - Dubbele buiging en afschuifkracht volgens 6.2.9.3 en 6.2.10 - Klasse 4 - Hoekprofiel
45	Doorsnede No. 15 - RRO 250x150x6 (koudgevormd)					
	1.290	RC1	0.00	≤ 1	101)	Doorsnede - Trek volgens 6.2.3
	0.000	RC1	0.00	≤ 1	102)	Doorsnede - Druk volgens 6.2.4
	0.000	RC1	0.04	≤ 1	121)	Doorsnede - Dwarskracht in z-as volgens 6.2.6
	1.290	RC1	0.01	≤ 1	122)	Doorsnede - Dwarskracht in z-as volgens 6.2.6(4) - Klasse 3 of 4
	0.000	RC1	0.01	≤ 1	123)	Doorsnede - Dwarskracht in y-as volgens 6.2.6
	0.583	RC1	0.01	≤ 1	124)	Doorsnede - Dwarskracht in y-as volgens 6.2.6(4) - Klasse 3 of 4
	0.000	RC1	0.00	≤ 1	126)	Doorsnede - Plooien door buiging volgens 6.2.6(6)
	0.000	RC1	0.08	≤ 1	161)	Doorsnede - Dubbele buiging en afschuifkracht volgens 6.2.6, 6.2.7 en 6.2.9
	1.290	RC1	0.06	≤ 1	162)	Doorsnede - Dubbele buiging en afschuifkracht volgens 6.2.9.2 en 6.2.10 - Klasse 3
	0.000	RC1	0.09	≤ 1	181)	Doorsnede - Buiging, dwars- en normaalkracht volgens 6.2.9.1
	0.000	RC1	0.13	≤ 1	221)	Doorsnede - Dubbele buiging, dwars- en normaalkracht volgens 6.2.10 en 6.2.9
	1.290	RC1	0.06	≤ 1	222)	Doorsnede - Dubbele buiging, dwars- en normaalkracht volgens 6.2.10 en 6.2.9 - Klasse 3
	0.645	RC1	0.03	≤ 1	255)	Doorsnede - Buiging om z-as en afschuiving volgens 6.2.10 en 6.2.9.3 - Klasse 4 - Hoekprofiel
46	Doorsnede No. 15 - RRO 250x150x6 (koudgevormd)					
	3.260	RC1	0.01	≤ 1	101)	Doorsnede - Trek volgens 6.2.3
	0.000	RC1	0.00	≤ 1	102)	Doorsnede - Druk volgens 6.2.4
	0.583	RC1	0.07	≤ 1	111)	Doorsnede - Buiging om y-as volgens 6.2.5 - Klasse 1 of 2
	0.000	RC1	0.02	≤ 1	121)	Doorsnede - Dwarskracht in z-as volgens 6.2.6
	0.000	RC1	0.02	≤ 1	122)	Doorsnede - Dwarskracht in z-as volgens 6.2.6(4) - Klasse 3 of 4
	0.583	RC1	0.03	≤ 1	123)	Doorsnede - Dwarskracht in y-as volgens 6.2.6
	0.000	RC1	0.03	≤ 1	124)	Doorsnede - Dwarskracht in y-as volgens 6.2.6(4) - Klasse 3 of 4
	0.000	RC1	0.00	≤ 1	126)	Doorsnede - Plooien door buiging volgens 6.2.6(6)
	0.583	RC1	0.07	≤ 1	141)	Doorsnede - Buiging en afschuifkracht volgens 6.2.5 en 6.2.8
	0.000	RC1	0.02	≤ 1	161)	Doorsnede - Dubbele buiging en afschuifkracht volgens 6.2.6, 6.2.7 en 6.2.9
	0.000	RC1	0.08	≤ 1	162)	Doorsnede - Dubbele buiging en afschuifkracht volgens 6.2.9.2 en 6.2.10 - Klasse 3
	1.630	RC1	0.01	≤ 1	181)	Doorsnede - Buiging, dwars- en normaalkracht volgens 6.2.9.1
	2.173	RC1	0.08	≤ 1	212)	Doorsnede - Buiging om z-as, afschuif- en normaalkracht volgens 6.2.10 en 6.2.9.3 - Klasse 4 - Hoekprofiel
	0.000	RC1	0.07	≤ 1	221)	Doorsnede - Dubbele buiging, dwars- en normaalkracht volgens 6.2.10 en 6.2.9
	0.000	RC1	0.30	≤ 1	222)	Doorsnede - Dubbele buiging, dwars- en normaalkracht volgens 6

2.4 BEREKENING PER STAAF

Staaf No.	Positie x [m]	BG/BC/ RC	Berekening		Berekenin No.	Omschrijving
						6.2.10 en 6.2.9 - Klasse 3
	2.552	RC1	0.12	≤ 1	232)	Doorsnede - Dubbele buiging, dwars- en normaalkracht volgens 6.2.10 en 6.2.9.3 - Klasse 4 - Hoekprofiel
47	Doorsnede No. 17 - RRO 100x60x4 (koudgevormd)					
	3.260	RC1	0.01	≤ 1	101)	Doorsnede - Trek volgens 6.2.3
	0.000	RC1	0.04	≤ 1	102)	Doorsnede - Druk volgens 6.2.4
	1.630	RC1	0.02	≤ 1	111)	Doorsnede - Buiging om y-as volgens 6.2.5 - Klasse 1 of 2
	0.000	RC1	0.01	≤ 1	116)	Doorsnede - Buiging om z-as volgens 6.2.5 - Klasse 1 of 2
	3.260	RC1	0.04	≤ 1	121)	Doorsnede - Dwarskracht in z-as volgens 6.2.6
	0.000	RC1	0.02	≤ 1	123)	Doorsnede - Dwarskracht in y-as volgens 6.2.6
	0.000	RC1	0.00	≤ 1	126)	Doorsnede - Plooien door buiging volgens 6.2.6(6)
	1.630	RC1	0.02	≤ 1	141)	Doorsnede - Buiging en afschuifkracht volgens 6.2.5 en 6.2.8
	0.000	RC1	0.01	≤ 1	151)	Doorsnede - Buiging om z-as en afschuifkracht volgens 6.2.5 en 6.2.8
	3.260	RC1	0.00	≤ 1	161)	Doorsnede - Dubbele buiging en afschuifkracht volgens 6.2.6, 6.2.7 en 6.2.9
	1.087	RC1	0.23	≤ 1	181)	Doorsnede - Buiging, dwars- en normaalkracht volgens 6.2.9.1
	0.000	RC1	0.17	≤ 1	201)	Doorsnede - Buiging om z-as, afschuif- en normaalkracht volgens 6.2.9.1
	3.260	RC1	0.11	≤ 1	221)	Doorsnede - Dubbele buiging, dwars- en normaalkracht volgens 6.2.10 en 6.2.9
	0.000	RC1	0.37	≤ 1	364)	Stabiliteit - Buiging en druk volgens 6.3.3, methode 2
48	Doorsnede No. 17 - RRO 100x60x4 (koudgevormd)					
	0.000	RC1	0.01	≤ 1	102)	Doorsnede - Druk volgens 6.2.4
	3.260	RC1	0.12	≤ 1	111)	Doorsnede - Buiging om y-as volgens 6.2.5 - Klasse 1 of 2
	0.000	RC1	0.03	≤ 1	116)	Doorsnede - Buiging om z-as volgens 6.2.5 - Klasse 1 of 2
	3.260	RC1	0.04	≤ 1	121)	Doorsnede - Dwarskracht in z-as volgens 6.2.6
	0.000	RC1	0.02	≤ 1	123)	Doorsnede - Dwarskracht in y-as volgens 6.2.6
	0.000	RC1	0.00	≤ 1	126)	Doorsnede - Plooien door buiging volgens 6.2.6(6)
	3.260	RC1	0.12	≤ 1	141)	Doorsnede - Buiging en afschuifkracht volgens 6.2.5 en 6.2.8
	0.000	RC1	0.03	≤ 1	151)	Doorsnede - Buiging om z-as en afschuifkracht volgens 6.2.5 en 6.2.8
	3.260	RC1	0.07	≤ 1	161)	Doorsnede - Dubbele buiging en afschuifkracht volgens 6.2.6, 6.2.7 en 6.2.9
	1.087	RC1	0.25	≤ 1	181)	Doorsnede - Buiging, dwars- en normaalkracht volgens 6.2.9.1
	0.000	RC1	0.15	≤ 1	201)	Doorsnede - Buiging om z-as, afschuif- en normaalkracht volgens 6.2.9.1
	1.630	RC1	0.11	≤ 1	221)	Doorsnede - Dubbele buiging, dwars- en normaalkracht volgens 6.2.10 en 6.2.9
	0.000	RC1	0.30	≤ 1	364)	Stabiliteit - Buiging en druk volgens 6.3.3, methode 2
49	Doorsnede No. 17 - RRO 100x60x4 (koudgevormd)					
	3.260	RC1	0.00	≤ 1	101)	Doorsnede - Trek volgens 6.2.3
	0.000	RC1	0.01	≤ 1	102)	Doorsnede - Druk volgens 6.2.4
	1.630	RC1	0.11	≤ 1	111)	Doorsnede - Buiging om y-as volgens 6.2.5 - Klasse 1 of 2
	0.000	RC1	0.06	≤ 1	116)	Doorsnede - Buiging om z-as volgens 6.2.5 - Klasse 1 of 2
	3.260	RC1	0.04	≤ 1	121)	Doorsnede - Dwarskracht in z-as volgens 6.2.6
	0.000	RC1	0.02	≤ 1	123)	Doorsnede - Dwarskracht in y-as volgens 6.2.6
	0.000	RC1	0.00	≤ 1	126)	Doorsnede - Plooien door buiging volgens 6.2.6(6)
	1.630	RC1	0.11	≤ 1	141)	Doorsnede - Buiging en afschuifkracht volgens 6.2.5 en 6.2.8
	0.000	RC1	0.06	≤ 1	151)	Doorsnede - Buiging om z-as en afschuifkracht volgens 6.2.5 en 6.2.8
	3.260	RC1	0.11	≤ 1	161)	Doorsnede - Dubbele buiging en afschuifkracht volgens 6.2.6, 6.2.7 en 6.2.9
	1.087	RC1	0.22	≤ 1	181)	Doorsnede - Buiging, dwars- en normaalkracht volgens 6.2.9.1
	0.000	RC1	0.14	≤ 1	201)	Doorsnede - Buiging om z-as, afschuif- en normaalkracht volgens 6.2.9.1
	1.630	RC1	0.12	≤ 1	221)	Doorsnede - Dubbele buiging, dwars- en normaalkracht volgens 6.2.10 en 6.2.9
	0.000	RC1	0.31	≤ 1	364)	Stabiliteit - Buiging en druk volgens 6.3.3, methode 2
50	Doorsnede No. 17 - RRO 100x60x4 (koudgevormd)					
	3.260	RC1	0.00	≤ 1	101)	Doorsnede - Trek volgens 6.2.3
	0.000	RC1	0.01	≤ 1	102)	Doorsnede - Druk volgens 6.2.4
	1.087	RC1	0.11	≤ 1	111)	Doorsnede - Buiging om y-as volgens 6.2.5 - Klasse 1 of 2
	0.000	RC1	0.05	≤ 1	116)	Doorsnede - Buiging om z-as volgens 6.2.5 - Klasse 1 of 2
	3.260	RC1	0.04	≤ 1	121)	Doorsnede - Dwarskracht in z-as volgens 6.2.6
	0.000	RC1	0.02	≤ 1	123)	Doorsnede - Dwarskracht in y-as volgens 6.2.6
	0.000	RC1	0.00	≤ 1	126)	Doorsnede - Plooien door buiging volgens 6.2.6(6)
	1.087	RC1	0.11	≤ 1	141)	Doorsnede - Buiging en afschuifkracht volgens 6.2.5 en 6.2.8
	0.000	RC1	0.05	≤ 1	151)	Doorsnede - Buiging om z-as en afschuifkracht volgens 6.2.5 en 6.2.8
	3.260	RC1	0.11	≤ 1	161)	Doorsnede - Dubbele buiging en afschuifkracht volgens 6.2.6, 6.2.7 en 6.2.9
	1.087	RC1	0.22	≤ 1	181)	Doorsnede - Buiging, dwars- en normaalkracht volgens 6.2.9.1
	0.000	RC1	0.13	≤ 1	201)	Doorsnede - Buiging om z-as, afschuif- en normaalkracht volgens 6.2.9.1
	1.630	RC1	0.12	≤ 1	221)	Doorsnede - Dubbele buiging, dwars- en normaalkracht volgens 6.2.10 en 6.2.9
	0.000	RC1	0.31	≤ 1	364)	Stabiliteit - Buiging en druk volgens 6.3.3, methode 2
51	Doorsnede No. 17 - RRO 100x60x4 (koudgevormd)					
	0.000	RC1	0.01	≤ 1	102)	Doorsnede - Druk volgens 6.2.4
	3.260	RC1	0.12	≤ 1	111)	Doorsnede - Buiging om y-as volgens 6.2.5 - Klasse 1 of 2
	0.000	RC1	0.03	≤ 1	116)	Doorsnede - Buiging om z-as volgens 6.2.5 - Klasse 1 of 2
	3.260	RC1	0.04	≤ 1	121)	Doorsnede - Dwarskracht in z-as volgens 6.2.6

2.4 BEREKENING PER STAAF

Staaf No.	Positie x [m]	BG/BC/ RC	Berekening		Berekenin No.	Omschrijving
	0.000	RC1	0.02	≤ 1	123)	Doorsnede - Dwarskracht in y-as volgens 6.2.6
	0.000	RC1	0.00	≤ 1	126)	Doorsnede - Plooien door buiging volgens 6.2.6(6)
	3.260	RC1	0.12	≤ 1	141)	Doorsnede - Buiging en afschuifkracht volgens 6.2.5 en 6.2.8
	0.000	RC1	0.03	≤ 1	151)	Doorsnede - Buiging om z-as en afschuifkracht volgens 6.2.5 en 6.2.8
	3.260	RC1	0.07	≤ 1	161)	Doorsnede - Dubbele buiging en afschuifkracht volgens 6.2.6, 6.2.7 en 6.2.9
	1.087	RC1	0.25	≤ 1	181)	Doorsnede - Buiging, dwars- en normaalkracht volgens 6.2.9.1
	0.000	RC1	0.15	≤ 1	201)	Doorsnede - Buiging om z-as, afschuif- en normaalkracht volgens 6.2.9.1
	1.630	RC1	0.11	≤ 1	221)	Doorsnede - Dubbele buiging, dwars- en normaalkracht volgens 6.2.10 en 6.2.9
	0.000	RC1	0.30	≤ 1	364)	Stabiliteit - Buiging en druk volgens 6.3.3, methode 2
52	Doorsnede No. 17 - RRO 100x60x4 (koudgevormd)					
	3.260	RC1	0.01	≤ 1	101)	Doorsnede - Trek volgens 6.2.3
	0.000	RC1	0.04	≤ 1	102)	Doorsnede - Druk volgens 6.2.4
	0.000	RC1	0.02	≤ 1	116)	Doorsnede - Buiging om z-as volgens 6.2.5 - Klasse 1 of 2
	3.260	RC1	0.04	≤ 1	121)	Doorsnede - Dwarskracht in z-as volgens 6.2.6
	0.000	RC1	0.02	≤ 1	123)	Doorsnede - Dwarskracht in y-as volgens 6.2.6
	0.000	RC1	0.00	≤ 1	126)	Doorsnede - Plooien door buiging volgens 6.2.6(6)
	0.000	RC1	0.02	≤ 1	151)	Doorsnede - Buiging om z-as en afschuifkracht volgens 6.2.5 en 6.2.8
	3.260	RC1	0.03	≤ 1	161)	Doorsnede - Dubbele buiging en afschuifkracht volgens 6.2.6, 6.2.7 en 6.2.9
	1.087	RC1	0.23	≤ 1	181)	Doorsnede - Buiging, dwars- en normaalkracht volgens 6.2.9.1
	0.000	RC1	0.17	≤ 1	201)	Doorsnede - Buiging om z-as, afschuif- en normaalkracht volgens 6.2.9.1
	3.260	RC1	0.11	≤ 1	221)	Doorsnede - Dubbele buiging, dwars- en normaalkracht volgens 6.2.10 en 6.2.9
	0.000	RC1	0.37	≤ 1	364)	Stabiliteit - Buiging en druk volgens 6.3.3, methode 2
53	Doorsnede No. 17 - RRO 100x60x4 (koudgevormd)					
	3.260	RC1	0.01	≤ 1	101)	Doorsnede - Trek volgens 6.2.3
	0.000	RC1	0.04	≤ 1	102)	Doorsnede - Druk volgens 6.2.4
	1.630	RC1	0.02	≤ 1	111)	Doorsnede - Buiging om y-as volgens 6.2.5 - Klasse 1 of 2
	0.000	RC1	0.02	≤ 1	116)	Doorsnede - Buiging om z-as volgens 6.2.5 - Klasse 1 of 2
	3.260	RC1	0.04	≤ 1	121)	Doorsnede - Dwarskracht in z-as volgens 6.2.6
	0.000	RC1	0.02	≤ 1	123)	Doorsnede - Dwarskracht in y-as volgens 6.2.6
	0.000	RC1	0.00	≤ 1	126)	Doorsnede - Plooien door buiging volgens 6.2.6(6)
	1.630	RC1	0.02	≤ 1	141)	Doorsnede - Buiging en afschuifkracht volgens 6.2.5 en 6.2.8
	0.000	RC1	0.02	≤ 1	151)	Doorsnede - Buiging om z-as en afschuifkracht volgens 6.2.5 en 6.2.8
	3.260	RC1	0.01	≤ 1	161)	Doorsnede - Dubbele buiging en afschuifkracht volgens 6.2.6, 6.2.7 en 6.2.9
	1.630	RC1	0.10	≤ 1	181)	Doorsnede - Buiging, dwars- en normaalkracht volgens 6.2.9.1
	0.000	RC1	0.19	≤ 1	201)	Doorsnede - Buiging om z-as, afschuif- en normaalkracht volgens 6.2.9.1
	3.260	RC1	0.11	≤ 1	221)	Doorsnede - Dubbele buiging, dwars- en normaalkracht volgens 6.2.10 en 6.2.9
	0.000	RC1	0.39	≤ 1	364)	Stabiliteit - Buiging en druk volgens 6.3.3, methode 2
54	Doorsnede No. 17 - RRO 100x60x4 (koudgevormd)					
	0.000	RC1	0.01	≤ 1	102)	Doorsnede - Druk volgens 6.2.4
	1.630	RC1	0.11	≤ 1	111)	Doorsnede - Buiging om y-as volgens 6.2.5 - Klasse 1 of 2
	0.000	RC1	0.04	≤ 1	116)	Doorsnede - Buiging om z-as volgens 6.2.5 - Klasse 1 of 2
	3.260	RC1	0.04	≤ 1	121)	Doorsnede - Dwarskracht in z-as volgens 6.2.6
	0.000	RC1	0.02	≤ 1	123)	Doorsnede - Dwarskracht in y-as volgens 6.2.6
	0.000	RC1	0.00	≤ 1	126)	Doorsnede - Plooien door buiging volgens 6.2.6(6)
	1.630	RC1	0.11	≤ 1	141)	Doorsnede - Buiging en afschuifkracht volgens 6.2.5 en 6.2.8
	0.000	RC1	0.04	≤ 1	151)	Doorsnede - Buiging om z-as en afschuifkracht volgens 6.2.5 en 6.2.8
	3.260	RC1	0.07	≤ 1	161)	Doorsnede - Dubbele buiging en afschuifkracht volgens 6.2.6, 6.2.7 en 6.2.9
	0.000	RC1	0.18	≤ 1	201)	Doorsnede - Buiging om z-as, afschuif- en normaalkracht volgens 6.2.9.1
	1.630	RC1	0.12	≤ 1	221)	Doorsnede - Dubbele buiging, dwars- en normaalkracht volgens 6.2.10 en 6.2.9
	0.000	RC1	0.32	≤ 1	364)	Stabiliteit - Buiging en druk volgens 6.3.3, methode 2
55	Doorsnede No. 17 - RRO 100x60x4 (koudgevormd)					
	3.260	RC1	0.00	≤ 1	101)	Doorsnede - Trek volgens 6.2.3
	0.000	RC1	0.01	≤ 1	102)	Doorsnede - Druk volgens 6.2.4
	1.087	RC1	0.11	≤ 1	111)	Doorsnede - Buiging om y-as volgens 6.2.5 - Klasse 1 of 2
	0.000	RC1	0.04	≤ 1	116)	Doorsnede - Buiging om z-as volgens 6.2.5 - Klasse 1 of 2
	3.260	RC1	0.04	≤ 1	121)	Doorsnede - Dwarskracht in z-as volgens 6.2.6
	0.000	RC1	0.02	≤ 1	123)	Doorsnede - Dwarskracht in y-as volgens 6.2.6
	0.000	RC1	0.00	≤ 1	126)	Doorsnede - Plooien door buiging volgens 6.2.6(6)
	1.087	RC1	0.11	≤ 1	141)	Doorsnede - Buiging en afschuifkracht volgens 6.2.5 en 6.2.8
	0.000	RC1	0.04	≤ 1	151)	Doorsnede - Buiging om z-as en afschuifkracht volgens 6.2.5 en 6.2.8
	3.260	RC1	0.04	≤ 1	161)	Doorsnede - Dubbele buiging en afschuifkracht volgens 6.2.6, 6.2.7 en 6.2.9
	1.087	RC1	0.23	≤ 1	181)	Doorsnede - Buiging, dwars- en normaalkracht volgens 6.2.9.1
	0.000	RC1	0.15	≤ 1	201)	Doorsnede - Buiging om z-as, afschuif- en normaalkracht volgens 6.2.9.1
	1.630	RC1	0.13	≤ 1	221)	Doorsnede - Dubbele buiging, dwars- en normaalkracht volgens 6

2.4 BEREKENING PER STAAF

Staaf No.	Positie x [m]	BG/BC/ RC	Berekening		Berekenin No.	Omschrijving
						6.2.10 en 6.2.9
	0.000	RC1	0.33	≤ 1	364)	Stabiliteit - Buiging en druk volgens 6.3.3, methode 2
56	Doorsnede No. 17 - RRO 100x60x4 (koudgevormd)					
	3.260	RC1	0.00	≤ 1	101)	Doorsnede - Trek volgens 6.2.3
	0.000	RC1	0.01	≤ 1	102)	Doorsnede - Druk volgens 6.2.4
	1.087	RC1	0.11	≤ 1	111)	Doorsnede - Buiging om y-as volgens 6.2.5 - Klasse 1 of 2
	0.000	RC1	0.06	≤ 1	116)	Doorsnede - Buiging om z-as volgens 6.2.5 - Klasse 1 of 2
	3.260	RC1	0.04	≤ 1	121)	Doorsnede - Dwarskracht in z-as volgens 6.2.6
	0.000	RC1	0.02	≤ 1	123)	Doorsnede - Dwarskracht in y-as volgens 6.2.6
	0.000	RC1	0.00	≤ 1	126)	Doorsnede - Plooien door buiging volgens 6.2.6(6)
	1.087	RC1	0.11	≤ 1	141)	Doorsnede - Buiging en afschuifkracht volgens 6.2.5 en 6.2.8
	0.000	RC1	0.06	≤ 1	151)	Doorsnede - Buiging om z-as en afschuifkracht volgens 6.2.5 en 6.2.8
	3.260	RC1	0.03	≤ 1	161)	Doorsnede - Dubbele buiging en afschuifkracht volgens 6.2.6, 6.2.7 en 6.2.9
	1.087	RC1	0.28	≤ 1	181)	Doorsnede - Buiging, dwars- en normaalkracht volgens 6.2.9.1
	0.000	RC1	0.16	≤ 1	201)	Doorsnede - Buiging om z-as, afschuif- en normaalkracht volgens 6.2.9.1
	1.630	RC1	0.13	≤ 1	221)	Doorsnede - Dubbele buiging, dwars- en normaalkracht volgens 6.2.10 en 6.2.9
	0.000	RC1	0.33	≤ 1	364)	Stabiliteit - Buiging en druk volgens 6.3.3, methode 2
57	Doorsnede No. 17 - RRO 100x60x4 (koudgevormd)					
	0.000	RC1	0.01	≤ 1	102)	Doorsnede - Druk volgens 6.2.4
	1.087	RC1	0.12	≤ 1	111)	Doorsnede - Buiging om y-as volgens 6.2.5 - Klasse 1 of 2
	0.000	RC1	0.04	≤ 1	116)	Doorsnede - Buiging om z-as volgens 6.2.5 - Klasse 1 of 2
	3.260	RC1	0.04	≤ 1	121)	Doorsnede - Dwarskracht in z-as volgens 6.2.6
	0.000	RC1	0.02	≤ 1	123)	Doorsnede - Dwarskracht in y-as volgens 6.2.6
	0.000	RC1	0.00	≤ 1	126)	Doorsnede - Plooien door buiging volgens 6.2.6(6)
	1.087	RC1	0.12	≤ 1	141)	Doorsnede - Buiging en afschuifkracht volgens 6.2.5 en 6.2.8
	0.000	RC1	0.04	≤ 1	151)	Doorsnede - Buiging om z-as en afschuifkracht volgens 6.2.5 en 6.2.8
	3.260	RC1	0.07	≤ 1	161)	Doorsnede - Dubbele buiging en afschuifkracht volgens 6.2.6, 6.2.7 en 6.2.9
	1.087	RC1	0.22	≤ 1	181)	Doorsnede - Buiging, dwars- en normaalkracht volgens 6.2.9.1
	0.000	RC1	0.19	≤ 1	201)	Doorsnede - Buiging om z-as, afschuif- en normaalkracht volgens 6.2.9.1
	1.630	RC1	0.12	≤ 1	221)	Doorsnede - Dubbele buiging, dwars- en normaalkracht volgens 6.2.10 en 6.2.9
	0.000	RC1	0.32	≤ 1	364)	Stabiliteit - Buiging en druk volgens 6.3.3, methode 2
58	Doorsnede No. 17 - RRO 100x60x4 (koudgevormd)					
	3.260	RC1	0.01	≤ 1	101)	Doorsnede - Trek volgens 6.2.3
	0.000	RC1	0.04	≤ 1	102)	Doorsnede - Druk volgens 6.2.4
	3.260	RC1	0.04	≤ 1	121)	Doorsnede - Dwarskracht in z-as volgens 6.2.6
	0.000	RC1	0.02	≤ 1	123)	Doorsnede - Dwarskracht in y-as volgens 6.2.6
	0.000	RC1	0.00	≤ 1	126)	Doorsnede - Plooien door buiging volgens 6.2.6(6)
	3.260	RC1	0.13	≤ 1	181)	Doorsnede - Buiging, dwars- en normaalkracht volgens 6.2.9.1
	0.000	RC1	0.21	≤ 1	201)	Doorsnede - Buiging om z-as, afschuif- en normaalkracht volgens 6.2.9.1
	3.260	RC1	0.11	≤ 1	221)	Doorsnede - Dubbele buiging, dwars- en normaalkracht volgens 6.2.10 en 6.2.9
	0.000	RC1	0.40	≤ 1	364)	Stabiliteit - Buiging en druk volgens 6.3.3, methode 2
66	Doorsnede No. 15 - RRO 250x150x6 (koudgevormd)					
	1.290	RC1	0.00	≤ 1	101)	Doorsnede - Trek volgens 6.2.3
	0.000	RC1	0.00	≤ 1	102)	Doorsnede - Druk volgens 6.2.4
	0.860	RC1	0.00	≤ 1	103)	Doorsnede - Druk volgens 6.2.4 - Klasse 4
	0.000	RC1	0.02	≤ 1	121)	Doorsnede - Dwarskracht in z-as volgens 6.2.6
	0.860	RC1	0.02	≤ 1	122)	Doorsnede - Dwarskracht in z-as volgens 6.2.6(4) - Klasse 3 of 4
	0.000	RC1	0.01	≤ 1	123)	Doorsnede - Dwarskracht in y-as volgens 6.2.6
	1.290	RC1	0.01	≤ 1	124)	Doorsnede - Dwarskracht in y-as volgens 6.2.6(4) - Klasse 3 of 4
	0.000	RC1	0.00	≤ 1	126)	Doorsnede - Plooien door buiging volgens 6.2.6(6)
	0.000	RC1	0.01	≤ 1	161)	Doorsnede - Dubbele buiging en afschuifkracht volgens 6.2.6, 6.2.7 en 6.2.9
	0.000	RC1	0.04	≤ 1	162)	Doorsnede - Dubbele buiging en afschuifkracht volgens 6.2.9.2 en 6.2.10 - Klasse 3
	1.290	RC1	0.04	≤ 1	212)	Doorsnede - Buiging om z-as, afschuif- en normaalkracht volgens 6.2.10 en 6.2.9.3 - Klasse 4 - Hoekprofiel
	0.000	RC1	0.03	≤ 1	221)	Doorsnede - Dubbele buiging, dwars- en normaalkracht volgens 6.2.10 en 6.2.9
	0.860	RC1	0.08	≤ 1	222)	Doorsnede - Dubbele buiging, dwars- en normaalkracht volgens 6.2.10 en 6.2.9 - Klasse 3
	0.860	RC1	0.01	≤ 1	255)	Doorsnede - Buiging om z-as en afschuiving volgens 6.2.10 en 6.2.9.3 - Klasse 4 - Hoekprofiel
67	Doorsnede No. 15 - RRO 250x150x6 (koudgevormd)					
	1.290	RC1	0.00	≤ 1	101)	Doorsnede - Trek volgens 6.2.3
	0.000	RC1	0.00	≤ 1	102)	Doorsnede - Druk volgens 6.2.4
	0.583	RC1	0.01	≤ 1	111)	Doorsnede - Buiging om y-as volgens 6.2.5 - Klasse 1 of 2
	0.583	RC1	0.01	≤ 1	117)	Doorsnede - Buiging om z-as volgens 6.2.5 - Klasse 3
	0.583	RC1	0.01	≤ 1	121)	Doorsnede - Dwarskracht in z-as volgens 6.2.6
	0.000	RC1	0.01	≤ 1	122)	Doorsnede - Dwarskracht in z-as volgens 6.2.6(4) - Klasse 3 of 4
	0.583	RC1	0.01	≤ 1	123)	Doorsnede - Dwarskracht in y-as volgens 6.2.6
	0.000	RC1	0.01	≤ 1	124)	Doorsnede - Dwarskracht in y-as volgens 6.2.6(4) - Klasse 3 of 4
	0.000	RC1	0.00	≤ 1	126)	Doorsnede - Plooien door buiging volgens 6.2.6(6)
	0.583	RC1	0.01	≤ 1	141)	Doorsnede - Buiging en afschuifkracht volgens 6.2.5 en 6.2.8

2.4 BEREKENING PER STAAF

Staaf No.	Positie x [m]	BG/BC/ RC	Berekening		Berekenin No.	Omschrijving
	0.583	RC1	0.01	≤ 1	152)	Doorsnede - Buiging om z-as en afschuifkracht volgens 6.2.9.2 en 6.2.10 - Klasse 3
	0.000	RC1	0.00	≤ 1	161)	Doorsnede - Dubbele buiging en afschuifkracht volgens 6.2.6, 6.2.7 en 6.2.9
	0.645	RC1	0.03	≤ 1	162)	Doorsnede - Dubbele buiging en afschuifkracht volgens 6.2.9.2 en 6.2.10 - Klasse 3
	0.000	RC1	0.04	≤ 1	212)	Doorsnede - Buiging om z-as, afschuif- en normaalkracht volgens 6.2.10 en 6.2.9.3 - Klasse 4 - Hoekprofiel
	1.290	RC1	0.01	≤ 1	221)	Doorsnede - Dubbele buiging, dwars- en normaalkracht volgens 6.2.10 en 6.2.9
	0.583	RC1	0.06	≤ 1	222)	Doorsnede - Dubbele buiging, dwars- en normaalkracht volgens 6.2.10 en 6.2.9 - Klasse 3
	0.000	RC1	0.02	≤ 1	255)	Doorsnede - Buiging om z-as en afschuiving volgens 6.2.10 en 6.2.9.3 - Klasse 4 - Hoekprofiel
68	Doorsnede No. 15 - RRO 250x150x6 (koudgevormd)					
	1.290	RC1	0.00	≤ 1	101)	Doorsnede - Trek volgens 6.2.3
	0.583	RC1	0.01	≤ 1	111)	Doorsnede - Buiging om y-as volgens 6.2.5 - Klasse 1 of 2
	0.000	RC1	0.01	≤ 1	117)	Doorsnede - Buiging om z-as volgens 6.2.5 - Klasse 3
	0.000	RC1	0.00	≤ 1	121)	Doorsnede - Dwarskracht in z-as volgens 6.2.6
	1.290	RC1	0.01	≤ 1	122)	Doorsnede - Dwarskracht in z-as volgens 6.2.6(4) - Klasse 3 of 4
	0.000	RC1	0.04	≤ 1	123)	Doorsnede - Dwarskracht in y-as volgens 6.2.6
	0.583	RC1	0.04	≤ 1	124)	Doorsnede - Dwarskracht in y-as volgens 6.2.6(4) - Klasse 3 of 4
	0.000	RC1	0.00	≤ 1	126)	Doorsnede - Plooien door buiging volgens 6.2.6(6)
	0.583	RC1	0.01	≤ 1	141)	Doorsnede - Buiging en afschuifkracht volgens 6.2.5 en 6.2.8
	0.000	RC1	0.01	≤ 1	152)	Doorsnede - Buiging om z-as en afschuifkracht volgens 6.2.9.2 en 6.2.10 - Klasse 3
	0.000	RC1	0.00	≤ 1	161)	Doorsnede - Dubbele buiging en afschuifkracht volgens 6.2.6, 6.2.7 en 6.2.9
	0.645	RC1	0.05	≤ 1	162)	Doorsnede - Dubbele buiging en afschuifkracht volgens 6.2.9.2 en 6.2.10 - Klasse 3
	0.000	RC1	0.01	≤ 1	221)	Doorsnede - Dubbele buiging, dwars- en normaalkracht volgens 6.2.10 en 6.2.9
	0.645	RC1	0.12	≤ 1	222)	Doorsnede - Dubbele buiging, dwars- en normaalkracht volgens 6.2.10 en 6.2.9 - Klasse 3
	1.290	RC1	0.21	≤ 1	232)	Doorsnede - Dubbele buiging, dwars- en normaalkracht volgens 6.2.10 en 6.2.9.3 - Klasse 4 - Hoekprofiel
	1.290	RC1	0.03	≤ 1	255)	Doorsnede - Buiging om z-as en afschuiving volgens 6.2.10 en 6.2.9.3 - Klasse 4 - Hoekprofiel
	1.290	RC1	0.09	≤ 1	265)	Doorsnede - Dubbele buiging en afschuifkracht volgens 6.2.9.3 en 6.2.10 - Klasse 4 - Hoekprofiel
77	Doorsnede No. 15 - RRO 250x150x6 (koudgevormd)					
	1.290	RC1	0.00	≤ 1	101)	Doorsnede - Trek volgens 6.2.3
	0.000	RC1	0.00	≤ 1	102)	Doorsnede - Druk volgens 6.2.4
	1.290	RC1	0.00	≤ 1	111)	Doorsnede - Buiging om y-as volgens 6.2.5 - Klasse 1 of 2
	0.000	RC1	0.02	≤ 1	121)	Doorsnede - Dwarskracht in z-as volgens 6.2.6
	0.583	RC1	0.02	≤ 1	122)	Doorsnede - Dwarskracht in z-as volgens 6.2.6(4) - Klasse 3 of 4
	0.000	RC1	0.01	≤ 1	123)	Doorsnede - Dwarskracht in y-as volgens 6.2.6
	0.430	RC1	0.01	≤ 1	124)	Doorsnede - Dwarskracht in y-as volgens 6.2.6(4) - Klasse 3 of 4
	0.000	RC1	0.00	≤ 1	126)	Doorsnede - Plooien door buiging volgens 6.2.6(6)
	1.290	RC1	0.00	≤ 1	141)	Doorsnede - Buiging en afschuifkracht volgens 6.2.5 en 6.2.8
	0.000	RC1	0.01	≤ 1	161)	Doorsnede - Dubbele buiging en afschuifkracht volgens 6.2.6, 6.2.7 en 6.2.9
	0.000	RC1	0.04	≤ 1	162)	Doorsnede - Dubbele buiging en afschuifkracht volgens 6.2.9.2 en 6.2.10 - Klasse 3
	0.860	RC1	0.03	≤ 1	212)	Doorsnede - Buiging om z-as, afschuif- en normaalkracht volgens 6.2.10 en 6.2.9.3 - Klasse 4 - Hoekprofiel
	0.000	RC1	0.03	≤ 1	221)	Doorsnede - Dubbele buiging, dwars- en normaalkracht volgens 6.2.10 en 6.2.9
	0.583	RC1	0.10	≤ 1	222)	Doorsnede - Dubbele buiging, dwars- en normaalkracht volgens 6.2.10 en 6.2.9 - Klasse 3
	0.860	RC1	0.04	≤ 1	232)	Doorsnede - Dubbele buiging, dwars- en normaalkracht volgens 6.2.10 en 6.2.9.3 - Klasse 4 - Hoekprofiel
	0.860	RC1	0.01	≤ 1	255)	Doorsnede - Buiging om z-as en afschuiving volgens 6.2.10 en 6.2.9.3 - Klasse 4 - Hoekprofiel
	0.645	RC1	0.03	≤ 1	265)	Doorsnede - Dubbele buiging en afschuifkracht volgens 6.2.9.3 en 6.2.10 - Klasse 4 - Hoekprofiel
78	Doorsnede No. 15 - RRO 250x150x6 (koudgevormd)					
	1.290	RC1	0.00	≤ 1	101)	Doorsnede - Trek volgens 6.2.3
	0.000	RC1	0.00	≤ 1	102)	Doorsnede - Druk volgens 6.2.4
	0.645	RC1	0.00	≤ 1	111)	Doorsnede - Buiging om y-as volgens 6.2.5 - Klasse 1 of 2
	0.583	RC1	0.01	≤ 1	117)	Doorsnede - Buiging om z-as volgens 6.2.5 - Klasse 3
	0.583	RC1	0.01	≤ 1	121)	Doorsnede - Dwarskracht in z-as volgens 6.2.6
	0.000	RC1	0.01	≤ 1	122)	Doorsnede - Dwarskracht in z-as volgens 6.2.6(4) - Klasse 3 of 4
	0.583	RC1	0.01	≤ 1	123)	Doorsnede - Dwarskracht in y-as volgens 6.2.6
	0.000	RC1	0.01	≤ 1	124)	Doorsnede - Dwarskracht in y-as volgens 6.2.6(4) - Klasse 3 of 4
	0.000	RC1	0.00	≤ 1	126)	Doorsnede - Plooien door buiging volgens 6.2.6(6)
	0.645	RC1	0.00	≤ 1	141)	Doorsnede - Buiging en afschuifkracht volgens 6.2.5 en 6.2.8
	0.583	RC1	0.01	≤ 1	152)	Doorsnede - Buiging om z-as en afschuifkracht volgens 6.2.9.2 en 6.2.10 - Klasse 3
	0.000	RC1	0.01	≤ 1	161)	Doorsnede - Dubbele buiging en afschuifkracht volgens 6.2.6, 6.2.7 en 6.2.9
	0.000	RC1	0.04	≤ 1	162)	Doorsnede - Dubbele buiging en afschuifkracht volgens 6.2.9.2 en 6.2.10 - Klasse 3

2.4 BEREKENING PER STAAF

Staaf No.	Positie x [m]	BG/BC/ RC	Berekening		Berekenin No.	Omschrijving
	1.290	RC1	0.01	≤ 1	221)	Doorsnede - Dubbele buiging, dwars- en normaalkracht volgens 6.2.10 en 6.2.9
	0.000	RC1	0.07	≤ 1	222)	Doorsnede - Dubbele buiging, dwars- en normaalkracht volgens 6.2.10 en 6.2.9 - Klasse 3
	0.000	RC1	0.02	≤ 1	255)	Doorsnede - Buiging om z-as en afschuiving volgens 6.2.10 en 6.2.9.3 - Klasse 4 - Hoekprofiel
79	Doorsnede No. 15 - RRO 250x150x6 (koudgevormd)					
	1.290	RC1	0.00	≤ 1	101)	Doorsnede - Trek volgens 6.2.3
	0.645	RC1	0.01	≤ 1	111)	Doorsnede - Buiging om y-as volgens 6.2.5 - Klasse 1 of 2
	1.290	RC1	0.01	≤ 1	121)	Doorsnede - Dwarskracht in z-as volgens 6.2.6
	1.290	RC1	0.01	≤ 1	122)	Doorsnede - Dwarskracht in z-as volgens 6.2.6(4) - Klasse 3 of 4
	0.000	RC1	0.04	≤ 1	123)	Doorsnede - Dwarskracht in y-as volgens 6.2.6
	0.583	RC1	0.04	≤ 1	124)	Doorsnede - Dwarskracht in y-as volgens 6.2.6(4) - Klasse 3 of 4
	0.000	RC1	0.00	≤ 1	126)	Doorsnede - Plooien door buiging volgens 6.2.6(6)
	0.645	RC1	0.01	≤ 1	141)	Doorsnede - Buiging en afschuifkracht volgens 6.2.5 en 6.2.8
	0.000	RC1	0.00	≤ 1	161)	Doorsnede - Dubbele buiging en afschuifkracht volgens 6.2.6, 6.2.7 en 6.2.9
	1.290	RC1	0.08	≤ 1	162)	Doorsnede - Dubbele buiging en afschuifkracht volgens 6.2.9.2 en 6.2.10 - Klasse 3
	0.000	RC1	0.01	≤ 1	221)	Doorsnede - Dubbele buiging, dwars- en normaalkracht volgens 6.2.10 en 6.2.9
	0.645	RC1	0.12	≤ 1	222)	Doorsnede - Dubbele buiging, dwars- en normaalkracht volgens 6.2.10 en 6.2.9 - Klasse 3
	1.290	RC1	0.21	≤ 1	232)	Doorsnede - Dubbele buiging, dwars- en normaalkracht volgens 6.2.10 en 6.2.9.3 - Klasse 4 - Hoekprofiel
	1.290	RC1	0.09	≤ 1	255)	Doorsnede - Buiging om z-as en afschuiving volgens 6.2.10 en 6.2.9.3 - Klasse 4 - Hoekprofiel
	1.290	RC1	0.09	≤ 1	265)	Doorsnede - Dubbele buiging en afschuifkracht volgens 6.2.9.3 en 6.2.10 - Klasse 4 - Hoekprofiel
80	Doorsnede No. 15 - RRO 250x150x6 (koudgevormd)					
	1.290	RC1	0.00	≤ 1	101)	Doorsnede - Trek volgens 6.2.3
	0.000	RC1	0.01	≤ 1	102)	Doorsnede - Druk volgens 6.2.4
	0.645	RC1	0.01	≤ 1	103)	Doorsnede - Druk volgens 6.2.4 - Klasse 4
	0.000	RC1	0.02	≤ 1	111)	Doorsnede - Buiging om y-as volgens 6.2.5 - Klasse 1 of 2
	0.000	RC1	0.02	≤ 1	121)	Doorsnede - Dwarskracht in z-as volgens 6.2.6
	1.290	RC1	0.02	≤ 1	122)	Doorsnede - Dwarskracht in z-as volgens 6.2.6(4) - Klasse 3 of 4
	1.290	RC1	0.00	≤ 1	123)	Doorsnede - Dwarskracht in y-as volgens 6.2.6
	1.290	RC1	0.00	≤ 1	124)	Doorsnede - Dwarskracht in y-as volgens 6.2.6(4) - Klasse 3 of 4
	0.000	RC1	0.00	≤ 1	126)	Doorsnede - Plooien door buiging volgens 6.2.6(6)
	0.000	RC1	0.02	≤ 1	141)	Doorsnede - Buiging en afschuifkracht volgens 6.2.5 en 6.2.8
	0.000	RC1	0.03	≤ 1	161)	Doorsnede - Dubbele buiging en afschuifkracht volgens 6.2.6, 6.2.7 en 6.2.9
	1.290	RC1	0.04	≤ 1	162)	Doorsnede - Dubbele buiging en afschuifkracht volgens 6.2.9.2 en 6.2.10 - Klasse 3
	0.000	RC1	0.11	≤ 1	181)	Doorsnede - Buiging, dwars- en normaalkracht volgens 6.2.9.1
	1.290	RC1	0.04	≤ 1	212)	Doorsnede - Buiging om z-as, afschuif- en normaalkracht volgens 6.2.10 en 6.2.9.3 - Klasse 4 - Hoekprofiel
	0.000	RC1	0.03	≤ 1	221)	Doorsnede - Dubbele buiging, dwars- en normaalkracht volgens 6.2.10 en 6.2.9
	0.000	RC1	0.05	≤ 1	222)	Doorsnede - Dubbele buiging, dwars- en normaalkracht volgens 6.2.10 en 6.2.9 - Klasse 3
	1.290	RC1	0.04	≤ 1	232)	Doorsnede - Dubbele buiging, dwars- en normaalkracht volgens 6.2.10 en 6.2.9.3 - Klasse 4 - Hoekprofiel
	0.860	RC1	0.01	≤ 1	255)	Doorsnede - Buiging om z-as en afschuiving volgens 6.2.10 en 6.2.9.3 - Klasse 4 - Hoekprofiel
	1.290	RC1	0.04	≤ 1	265)	Doorsnede - Dubbele buiging en afschuifkracht volgens 6.2.9.3 en 6.2.10 - Klasse 4 - Hoekprofiel
81	Doorsnede No. 15 - RRO 250x150x6 (koudgevormd)					
	1.290	RC1	0.01	≤ 1	101)	Doorsnede - Trek volgens 6.2.3
	0.000	RC1	0.01	≤ 1	102)	Doorsnede - Druk volgens 6.2.4
	1.290	RC1	0.02	≤ 1	111)	Doorsnede - Buiging om y-as volgens 6.2.5 - Klasse 1 of 2
	1.290	RC1	0.01	≤ 1	117)	Doorsnede - Buiging om z-as volgens 6.2.5 - Klasse 3
	0.000	RC1	0.01	≤ 1	121)	Doorsnede - Dwarskracht in z-as volgens 6.2.6
	0.000	RC1	0.01	≤ 1	122)	Doorsnede - Dwarskracht in z-as volgens 6.2.6(4) - Klasse 3 of 4
	0.000	RC1	0.00	≤ 1	123)	Doorsnede - Dwarskracht in y-as volgens 6.2.6
	0.000	RC1	0.00	≤ 1	124)	Doorsnede - Dwarskracht in y-as volgens 6.2.6(4) - Klasse 3 of 4
	0.000	RC1	0.00	≤ 1	126)	Doorsnede - Plooien door buiging volgens 6.2.6(6)
	1.290	RC1	0.02	≤ 1	141)	Doorsnede - Buiging en afschuifkracht volgens 6.2.5 en 6.2.8
	1.290	RC1	0.01	≤ 1	152)	Doorsnede - Buiging om z-as en afschuifkracht volgens 6.2.9.2 en 6.2.10 - Klasse 3
	1.290	RC1	0.01	≤ 1	161)	Doorsnede - Dubbele buiging en afschuifkracht volgens 6.2.6, 6.2.7 en 6.2.9
	1.290	RC1	0.06	≤ 1	162)	Doorsnede - Dubbele buiging en afschuifkracht volgens 6.2.9.2 en 6.2.10 - Klasse 3
	0.645	RC1	0.02	≤ 1	181)	Doorsnede - Buiging, dwars- en normaalkracht volgens 6.2.9.1
	0.583	RC1	0.02	≤ 1	212)	Doorsnede - Buiging om z-as, afschuif- en normaalkracht volgens 6.2.10 en 6.2.9.3 - Klasse 4 - Hoekprofiel
	1.290	RC1	0.01	≤ 1	221)	Doorsnede - Dubbele buiging, dwars- en normaalkracht volgens 6.2.10 en 6.2.9
	0.645	RC1	0.07	≤ 1	222)	Doorsnede - Dubbele buiging, dwars- en normaalkracht volgens 6.2.10 en 6.2.9 - Klasse 3
	0.000	RC1	0.04	≤ 1	232)	Doorsnede - Dubbele buiging, dwars- en normaalkracht volgens 6.2.10 en 6.2.9.3 - Klasse 4 - Hoekprofiel
	0.583	RC1	0.01	≤ 1	255)	Doorsnede - Buiging om z-as en afschuiving volgens 6.2.10 en 6.2.9.3 - Klasse 4 - Hoekprofiel
	0.645	RC1	0.02	≤ 1	265)	Doorsnede - Dubbele buiging en afschuifkracht volgens 6.2.9.3 en 6.2.10 - Klasse 4 - Hoekprofiel

2.4 BEREKENING PER STAAF

Staaf No.	Positie x [m]	BG/BC/ RC	Berekening		Berekenin No.	Omschrijving
82	Doorsnede No. 15 - RRO 250x150x6 (koudgevormd)					
	1.290	RC1	0.00	≤ 1	101)	Doorsnede - Trek volgens 6.2.3
	0.000	RC1	0.01	≤ 1	102)	Doorsnede - Druk volgens 6.2.4
	1.290	RC1	0.01	≤ 1	103)	Doorsnede - Druk volgens 6.2.4 - Klasse 4
	0.000	RC1	0.01	≤ 1	117)	Doorsnede - Buiging om z-as volgens 6.2.5 - Klasse 3
	0.000	RC1	0.00	≤ 1	121)	Doorsnede - Dwarskracht in z-as volgens 6.2.6
	1.290	RC1	0.01	≤ 1	122)	Doorsnede - Dwarskracht in z-as volgens 6.2.6(4) - Klasse 3 of 4
	0.000	RC1	0.03	≤ 1	123)	Doorsnede - Dwarskracht in y-as volgens 6.2.6
	0.583	RC1	0.03	≤ 1	124)	Doorsnede - Dwarskracht in y-as volgens 6.2.6(4) - Klasse 3 of 4
	0.000	RC1	0.00	≤ 1	126)	Doorsnede - Plooien door buiging volgens 6.2.6(6)
	0.000	RC1	0.01	≤ 1	152)	Doorsnede - Buiging om z-as en afschuifkracht volgens 6.2.9.2 en 6.2.10 - Klasse 3
	0.000	RC1	0.01	≤ 1	161)	Doorsnede - Dubbele buiging en afschuifkracht volgens 6.2.6, 6.2.7 en 6.2.9
	1.290	RC1	0.13	≤ 1	162)	Doorsnede - Dubbele buiging en afschuifkracht volgens 6.2.9.2 en 6.2.10 - Klasse 3
	0.000	RC1	0.03	≤ 1	181)	Doorsnede - Buiging, dwars- en normaalkracht volgens 6.2.9.1
	1.290	RC1	0.04	≤ 1	212)	Doorsnede - Buiging om z-as, afschuif- en normaalkracht volgens 6.2.10 en 6.2.9.3 - Klasse 4 - Hoekprofiel
	0.000	RC1	0.01	≤ 1	221)	Doorsnede - Dubbele buiging, dwars- en normaalkracht volgens 6.2.10 en 6.2.9
	1.290	RC1	0.16	≤ 1	222)	Doorsnede - Dubbele buiging, dwars- en normaalkracht volgens 6.2.10 en 6.2.9 - Klasse 3
	1.290	RC1	0.13	≤ 1	232)	Doorsnede - Dubbele buiging, dwars- en normaalkracht volgens 6.2.10 en 6.2.9.3 - Klasse 4 - Hoekprofiel
	1.290	RC1	0.06	≤ 1	255)	Doorsnede - Buiging om z-as en afschuiving volgens 6.2.10 en 6.2.9.3 - Klasse 4 - Hoekprofiel
	1.290	RC1	0.16	≤ 1	265)	Doorsnede - Dubbele buiging en afschuifkracht volgens 6.2.9.3 en 6.2.10 - Klasse 4 - Hoekprofiel
83	Doorsnede No. 15 - RRO 250x150x6 (koudgevormd)					
	1.290	RC1	0.00	≤ 1	101)	Doorsnede - Trek volgens 6.2.3
	0.000	RC1	0.01	≤ 1	102)	Doorsnede - Druk volgens 6.2.4
	0.645	RC1	0.01	≤ 1	103)	Doorsnede - Druk volgens 6.2.4 - Klasse 4
	0.000	RC1	0.02	≤ 1	121)	Doorsnede - Dwarskracht in z-as volgens 6.2.6
	1.290	RC1	0.02	≤ 1	122)	Doorsnede - Dwarskracht in z-as volgens 6.2.6(4) - Klasse 3 of 4
	0.860	RC1	0.00	≤ 1	123)	Doorsnede - Dwarskracht in y-as volgens 6.2.6
	1.290	RC1	0.00	≤ 1	124)	Doorsnede - Dwarskracht in y-as volgens 6.2.6(4) - Klasse 3 of 4
	0.000	RC1	0.00	≤ 1	126)	Doorsnede - Plooien door buiging volgens 6.2.6(6)
	0.000	RC1	0.03	≤ 1	161)	Doorsnede - Dubbele buiging en afschuifkracht volgens 6.2.6, 6.2.7 en 6.2.9
	0.000	RC1	0.06	≤ 1	162)	Doorsnede - Dubbele buiging en afschuifkracht volgens 6.2.9.2 en 6.2.10 - Klasse 3
	1.290	RC1	0.04	≤ 1	212)	Doorsnede - Buiging om z-as, afschuif- en normaalkracht volgens 6.2.10 en 6.2.9.3 - Klasse 4 - Hoekprofiel
	0.000	RC1	0.03	≤ 1	221)	Doorsnede - Dubbele buiging, dwars- en normaalkracht volgens 6.2.10 en 6.2.9
	0.860	RC1	0.05	≤ 1	222)	Doorsnede - Dubbele buiging, dwars- en normaalkracht volgens 6.2.10 en 6.2.9 - Klasse 3
	1.290	RC1	0.04	≤ 1	232)	Doorsnede - Dubbele buiging, dwars- en normaalkracht volgens 6.2.10 en 6.2.9.3 - Klasse 4 - Hoekprofiel
	0.860	RC1	0.02	≤ 1	255)	Doorsnede - Buiging om z-as en afschuiving volgens 6.2.10 en 6.2.9.3 - Klasse 4 - Hoekprofiel
	1.290	RC1	0.04	≤ 1	265)	Doorsnede - Dubbele buiging en afschuifkracht volgens 6.2.9.3 en 6.2.10 - Klasse 4 - Hoekprofiel
84	Doorsnede No. 15 - RRO 250x150x6 (koudgevormd)					
	1.290	RC1	0.01	≤ 1	101)	Doorsnede - Trek volgens 6.2.3
	0.000	RC1	0.01	≤ 1	102)	Doorsnede - Druk volgens 6.2.4
	1.290	RC1	0.02	≤ 1	111)	Doorsnede - Buiging om y-as volgens 6.2.5 - Klasse 1 of 2
	0.645	RC1	0.01	≤ 1	121)	Doorsnede - Dwarskracht in z-as volgens 6.2.6
	0.000	RC1	0.01	≤ 1	122)	Doorsnede - Dwarskracht in z-as volgens 6.2.6(4) - Klasse 3 of 4
	0.000	RC1	0.00	≤ 1	123)	Doorsnede - Dwarskracht in y-as volgens 6.2.6
	0.000	RC1	0.00	≤ 1	124)	Doorsnede - Dwarskracht in y-as volgens 6.2.6(4) - Klasse 3 of 4
	0.000	RC1	0.00	≤ 1	126)	Doorsnede - Plooien door buiging volgens 6.2.6(6)
	1.290	RC1	0.02	≤ 1	141)	Doorsnede - Buiging en afschuifkracht volgens 6.2.5 en 6.2.8
	1.290	RC1	0.01	≤ 1	161)	Doorsnede - Dubbele buiging en afschuifkracht volgens 6.2.6, 6.2.7 en 6.2.9
	1.290	RC1	0.06	≤ 1	162)	Doorsnede - Dubbele buiging en afschuifkracht volgens 6.2.9.2 en 6.2.10 - Klasse 3
	0.645	RC1	0.02	≤ 1	181)	Doorsnede - Buiging, dwars- en normaalkracht volgens 6.2.9.1
	0.000	RC1	0.03	≤ 1	212)	Doorsnede - Buiging om z-as, afschuif- en normaalkracht volgens 6.2.10 en 6.2.9.3 - Klasse 4 - Hoekprofiel
	1.290	RC1	0.01	≤ 1	221)	Doorsnede - Dubbele buiging, dwars- en normaalkracht volgens 6.2.10 en 6.2.9
	0.583	RC1	0.07	≤ 1	222)	Doorsnede - Dubbele buiging, dwars- en normaalkracht volgens 6.2.10 en 6.2.9 - Klasse 3
	0.000	RC1	0.04	≤ 1	232)	Doorsnede - Dubbele buiging, dwars- en normaalkracht volgens 6.2.10 en 6.2.9.3 - Klasse 4 - Hoekprofiel
	0.583	RC1	0.01	≤ 1	255)	Doorsnede - Buiging om z-as en afschuiving volgens 6.2.10 en 6.2.9.3 - Klasse 4 - Hoekprofiel
	0.000	RC1	0.04	≤ 1	265)	Doorsnede - Dubbele buiging en afschuifkracht volgens 6.2.9.3 en 6.2.10 - Klasse 4 - Hoekprofiel
85	Doorsnede No. 15 - RRO 250x150x6 (koudgevormd)					

2.4 BEREKENING PER STAAF

Staaf No.	Positie x [m]	BG/BC/ RC	Berekening		Berekenin No.	Omschrijving
	1.290	RC1	0.00	≤ 1	101)	Doorsnede - Trek volgens 6.2.3
	0.000	RC1	0.01	≤ 1	102)	Doorsnede - Druk volgens 6.2.4
	1.290	RC1	0.01	≤ 1	103)	Doorsnede - Druk volgens 6.2.4 - Klasse 4
	0.583	RC1	0.01	≤ 1	121)	Doorsnede - Dwarskracht in z-as volgens 6.2.6
	1.290	RC1	0.01	≤ 1	122)	Doorsnede - Dwarskracht in z-as volgens 6.2.6(4) - Klasse 3 of 4
	0.000	RC1	0.03	≤ 1	123)	Doorsnede - Dwarskracht in y-as volgens 6.2.6
	0.583	RC1	0.04	≤ 1	124)	Doorsnede - Dwarskracht in y-as volgens 6.2.6(4) - Klasse 3 of 4
	0.000	RC1	0.00	≤ 1	126)	Doorsnede - Plooien door buiging volgens 6.2.6(6)
	0.000	RC1	0.01	≤ 1	161)	Doorsnede - Dubbele buiging en afschuifkracht volgens 6.2.6, 6.2.7 en 6.2.9
	1.290	RC1	0.17	≤ 1	162)	Doorsnede - Dubbele buiging en afschuifkracht volgens 6.2.9.2 en 6.2.10 - Klasse 3
	0.583	RC1	0.02	≤ 1	181)	Doorsnede - Buiging, dwars- en normaalkracht volgens 6.2.9.1
	1.290	RC1	0.04	≤ 1	212)	Doorsnede - Buiging om z-as, afschuif- en normaalkracht volgens 6.2.10 en 6.2.9.3 - Klasse 4 - Hoekprofiel
	0.000	RC1	0.01	≤ 1	221)	Doorsnede - Dubbele buiging, dwars- en normaalkracht volgens 6.2.10 en 6.2.9
	1.290	RC1	0.17	≤ 1	222)	Doorsnede - Dubbele buiging, dwars- en normaalkracht volgens 6.2.10 en 6.2.9 - Klasse 3
	1.290	RC1	0.10	≤ 1	232)	Doorsnede - Dubbele buiging, dwars- en normaalkracht volgens 6.2.10 en 6.2.9.3 - Klasse 4 - Hoekprofiel
	1.290	RC1	0.06	≤ 1	255)	Doorsnede - Buiging om z-as en afschuiving volgens 6.2.10 en 6.2.9.3 - Klasse 4 - Hoekprofiel
	1.290	RC1	0.16	≤ 1	265)	Doorsnede - Dubbele buiging en afschuifkracht volgens 6.2.9.3 en 6.2.10 - Klasse 4 - Hoekprofiel
92	Doorsnede No. 15 - RRO 250x150x6 (koudgevormd)					
	1.290	RC1	0.00	≤ 1	101)	Doorsnede - Trek volgens 6.2.3
	0.000	RC1	0.00	≤ 1	102)	Doorsnede - Druk volgens 6.2.4
	0.000	RC1	0.02	≤ 1	121)	Doorsnede - Dwarskracht in z-as volgens 6.2.6
	1.290	RC1	0.02	≤ 1	122)	Doorsnede - Dwarskracht in z-as volgens 6.2.6(4) - Klasse 3 of 4
	0.000	RC1	0.00	≤ 1	123)	Doorsnede - Dwarskracht in y-as volgens 6.2.6
	0.860	RC1	0.00	≤ 1	124)	Doorsnede - Dwarskracht in y-as volgens 6.2.6(4) - Klasse 3 of 4
	0.000	RC1	0.00	≤ 1	126)	Doorsnede - Plooien door buiging volgens 6.2.6(6)
	0.000	RC1	0.03	≤ 1	161)	Doorsnede - Dubbele buiging en afschuifkracht volgens 6.2.6, 6.2.7 en 6.2.9
	1.290	RC1	0.04	≤ 1	162)	Doorsnede - Dubbele buiging en afschuifkracht volgens 6.2.9.2 en 6.2.10 - Klasse 3
	0.000	RC1	0.05	≤ 1	181)	Doorsnede - Buiging, dwars- en normaalkracht volgens 6.2.9.1
	1.290	RC1	0.01	≤ 1	202)	Doorsnede - Buiging om z-as, afschuif- en normaalkracht volgens 6.2.9.2 - Klasse 3
	1.290	RC1	0.04	≤ 1	212)	Doorsnede - Buiging om z-as, afschuif- en normaalkracht volgens 6.2.10 en 6.2.9.3 - Klasse 4 - Hoekprofiel
	0.000	RC1	0.03	≤ 1	221)	Doorsnede - Dubbele buiging, dwars- en normaalkracht volgens 6.2.10 en 6.2.9
	0.000	RC1	0.04	≤ 1	222)	Doorsnede - Dubbele buiging, dwars- en normaalkracht volgens 6.2.10 en 6.2.9 - Klasse 3
	1.290	RC1	0.04	≤ 1	232)	Doorsnede - Dubbele buiging, dwars- en normaalkracht volgens 6.2.10 en 6.2.9.3 - Klasse 4 - Hoekprofiel
	1.290	RC1	0.03	≤ 1	255)	Doorsnede - Buiging om z-as en afschuiving volgens 6.2.10 en 6.2.9.3 - Klasse 4 - Hoekprofiel
93	Doorsnede No. 15 - RRO 250x150x6 (koudgevormd)					
	1.290	RC1	0.01	≤ 1	101)	Doorsnede - Trek volgens 6.2.3
	0.000	RC1	0.00	≤ 1	102)	Doorsnede - Druk volgens 6.2.4
	0.583	RC1	0.01	≤ 1	111)	Doorsnede - Buiging om y-as volgens 6.2.5 - Klasse 1 of 2
	1.290	RC1	0.01	≤ 1	117)	Doorsnede - Buiging om z-as volgens 6.2.5 - Klasse 3
	0.583	RC1	0.01	≤ 1	121)	Doorsnede - Dwarskracht in z-as volgens 6.2.6
	0.000	RC1	0.01	≤ 1	122)	Doorsnede - Dwarskracht in z-as volgens 6.2.6(4) - Klasse 3 of 4
	0.000	RC1	0.00	≤ 1	123)	Doorsnede - Dwarskracht in y-as volgens 6.2.6
	0.000	RC1	0.00	≤ 1	124)	Doorsnede - Dwarskracht in y-as volgens 6.2.6(4) - Klasse 3 of 4
	0.000	RC1	0.00	≤ 1	126)	Doorsnede - Plooien door buiging volgens 6.2.6(6)
	0.583	RC1	0.01	≤ 1	141)	Doorsnede - Buiging en afschuifkracht volgens 6.2.5 en 6.2.8
	1.290	RC1	0.01	≤ 1	152)	Doorsnede - Buiging om z-as en afschuifkracht volgens 6.2.9.2 en 6.2.10 - Klasse 3
	1.290	RC1	0.01	≤ 1	161)	Doorsnede - Dubbele buiging en afschuifkracht volgens 6.2.6, 6.2.7 en 6.2.9
	0.645	RC1	0.04	≤ 1	162)	Doorsnede - Dubbele buiging en afschuifkracht volgens 6.2.9.2 en 6.2.10 - Klasse 3
	0.000	RC1	0.04	≤ 1	212)	Doorsnede - Buiging om z-as, afschuif- en normaalkracht volgens 6.2.10 en 6.2.9.3 - Klasse 4 - Hoekprofiel
	1.290	RC1	0.01	≤ 1	221)	Doorsnede - Dubbele buiging, dwars- en normaalkracht volgens 6.2.10 en 6.2.9
	0.645	RC1	0.06	≤ 1	222)	Doorsnede - Dubbele buiging, dwars- en normaalkracht volgens 6.2.10 en 6.2.9 - Klasse 3
	0.000	RC1	0.04	≤ 1	232)	Doorsnede - Dubbele buiging, dwars- en normaalkracht volgens 6.2.10 en 6.2.9.3 - Klasse 4 - Hoekprofiel
	0.000	RC1	0.03	≤ 1	255)	Doorsnede - Buiging om z-as en afschuiving volgens 6.2.10 en 6.2.9.3 - Klasse 4 - Hoekprofiel
94	Doorsnede No. 15 - RRO 250x150x6 (koudgevormd)					
	1.290	RC1	0.01	≤ 1	101)	Doorsnede - Trek volgens 6.2.3
	0.000	RC1	0.00	≤ 1	102)	Doorsnede - Druk volgens 6.2.4
	0.000	RC1	0.01	≤ 1	117)	Doorsnede - Buiging om z-as volgens 6.2.5 - Klasse 3
	0.645	RC1	0.00	≤ 1	121)	Doorsnede - Dwarskracht in z-as volgens 6.2.6
	1.290	RC1	0.01	≤ 1	122)	Doorsnede - Dwarskracht in z-as volgens 6.2.6(4) - Klasse 3 of 4
	0.000	RC1	0.03	≤ 1	123)	Doorsnede - Dwarskracht in y-as volgens 6.2.6
	0.583	RC1	0.04	≤ 1	124)	Doorsnede - Dwarskracht in y-as volgens 6.2.6(4) - Klasse 3 of 4

2.4 BEREKENING PER STAAF

Staaf No.	Positie x [m]	BG/BC/ RC	Berekening		Berekenin No.	Omschrijving
	0.000	RC1	0.00	≤ 1	126)	Doorsnede - Plooien door buiging volgens 6.2.6(6)
	0.000	RC1	0.01	≤ 1	152)	Doorsnede - Buiging om z-as en afschuifkracht volgens 6.2.9.2 en 6.2.10 - Klasse 3
	0.000	RC1	0.01	≤ 1	161)	Doorsnede - Dubbele buiging en afschuifkracht volgens 6.2.6, 6.2.7 en 6.2.9
	1.290	RC1	0.16	≤ 1	162)	Doorsnede - Dubbele buiging en afschuifkracht volgens 6.2.9.2 en 6.2.10 - Klasse 3
	0.583	RC1	0.01	≤ 1	181)	Doorsnede - Buiging, dwars- en normaalkracht volgens 6.2.9.1
	1.290	RC1	0.08	≤ 1	212)	Doorsnede - Buiging om z-as, afschuif- en normaalkracht volgens 6.2.10 en 6.2.9.3 - Klasse 4 - Hoekprofiel
	0.000	RC1	0.01	≤ 1	221)	Doorsnede - Dubbele buiging, dwars- en normaalkracht volgens 6.2.10 en 6.2.9
	1.290	RC1	0.16	≤ 1	222)	Doorsnede - Dubbele buiging, dwars- en normaalkracht volgens 6.2.10 en 6.2.9 - Klasse 3
	1.290	RC1	0.17	≤ 1	232)	Doorsnede - Dubbele buiging, dwars- en normaalkracht volgens 6.2.10 en 6.2.9.3 - Klasse 4 - Hoekprofiel
	0.645	RC1	0.01	≤ 1	255)	Doorsnede - Buiging om z-as en afschuiving volgens 6.2.10 en 6.2.9.3 - Klasse 4 - Hoekprofiel
	1.290	RC1	0.16	≤ 1	265)	Doorsnede - Dubbele buiging en afschuifkracht volgens 6.2.9.3 en 6.2.10 - Klasse 4 - Hoekprofiel
95	Doorsnede No. 15 - RRO 250x150x6 (koudgevormd)					
	1.290	RC1	0.00	≤ 1	101)	Doorsnede - Trek volgens 6.2.3
	0.000	RC1	0.00	≤ 1	102)	Doorsnede - Druk volgens 6.2.4
	0.000	RC1	0.02	≤ 1	121)	Doorsnede - Dwarskracht in z-as volgens 6.2.6
	1.290	RC1	0.02	≤ 1	122)	Doorsnede - Dwarskracht in z-as volgens 6.2.6(4) - Klasse 3 of 4
	0.000	RC1	0.00	≤ 1	123)	Doorsnede - Dwarskracht in y-as volgens 6.2.6
	0.000	RC1	0.00	≤ 1	124)	Doorsnede - Dwarskracht in y-as volgens 6.2.6(4) - Klasse 3 of 4
	0.000	RC1	0.00	≤ 1	126)	Doorsnede - Plooien door buiging volgens 6.2.6(6)
	0.000	RC1	0.03	≤ 1	161)	Doorsnede - Dubbele buiging en afschuifkracht volgens 6.2.6, 6.2.7 en 6.2.9
	0.000	RC1	0.07	≤ 1	162)	Doorsnede - Dubbele buiging en afschuifkracht volgens 6.2.9.2 en 6.2.10 - Klasse 3
	0.430	RC1	0.03	≤ 1	181)	Doorsnede - Buiging, dwars- en normaalkracht volgens 6.2.9.1
	1.290	RC1	0.03	≤ 1	212)	Doorsnede - Buiging om z-as, afschuif- en normaalkracht volgens 6.2.10 en 6.2.9.3 - Klasse 4 - Hoekprofiel
	0.000	RC1	0.03	≤ 1	221)	Doorsnede - Dubbele buiging, dwars- en normaalkracht volgens 6.2.10 en 6.2.9
	1.290	RC1	0.05	≤ 1	222)	Doorsnede - Dubbele buiging, dwars- en normaalkracht volgens 6.2.10 en 6.2.9 - Klasse 3
	1.290	RC1	0.04	≤ 1	232)	Doorsnede - Dubbele buiging, dwars- en normaalkracht volgens 6.2.10 en 6.2.9.3 - Klasse 4 - Hoekprofiel
	1.290	RC1	0.03	≤ 1	255)	Doorsnede - Buiging om z-as en afschuiving volgens 6.2.10 en 6.2.9.3 - Klasse 4 - Hoekprofiel
96	Doorsnede No. 15 - RRO 250x150x6 (koudgevormd)					
	1.290	RC1	0.00	≤ 1	101)	Doorsnede - Trek volgens 6.2.3
	0.000	RC1	0.00	≤ 1	102)	Doorsnede - Druk volgens 6.2.4
	0.583	RC1	0.01	≤ 1	121)	Doorsnede - Dwarskracht in z-as volgens 6.2.6
	0.000	RC1	0.01	≤ 1	122)	Doorsnede - Dwarskracht in z-as volgens 6.2.6(4) - Klasse 3 of 4
	1.290	RC1	0.00	≤ 1	123)	Doorsnede - Dwarskracht in y-as volgens 6.2.6
	0.000	RC1	0.00	≤ 1	124)	Doorsnede - Dwarskracht in y-as volgens 6.2.6(4) - Klasse 3 of 4
	0.000	RC1	0.00	≤ 1	126)	Doorsnede - Plooien door buiging volgens 6.2.6(6)
	1.290	RC1	0.01	≤ 1	161)	Doorsnede - Dubbele buiging en afschuifkracht volgens 6.2.6, 6.2.7 en 6.2.9
	0.000	RC1	0.05	≤ 1	162)	Doorsnede - Dubbele buiging en afschuifkracht volgens 6.2.9.2 en 6.2.10 - Klasse 3
	0.000	RC1	0.04	≤ 1	212)	Doorsnede - Buiging om z-as, afschuif- en normaalkracht volgens 6.2.10 en 6.2.9.3 - Klasse 4 - Hoekprofiel
	1.290	RC1	0.01	≤ 1	221)	Doorsnede - Dubbele buiging, dwars- en normaalkracht volgens 6.2.10 en 6.2.9
	0.583	RC1	0.06	≤ 1	222)	Doorsnede - Dubbele buiging, dwars- en normaalkracht volgens 6.2.10 en 6.2.9 - Klasse 3
	0.000	RC1	0.03	≤ 1	232)	Doorsnede - Dubbele buiging, dwars- en normaalkracht volgens 6.2.10 en 6.2.9.3 - Klasse 4 - Hoekprofiel
	0.000	RC1	0.03	≤ 1	255)	Doorsnede - Buiging om z-as en afschuiving volgens 6.2.10 en 6.2.9.3 - Klasse 4 - Hoekprofiel
97	Doorsnede No. 15 - RRO 250x150x6 (koudgevormd)					
	1.290	RC1	0.01	≤ 1	101)	Doorsnede - Trek volgens 6.2.3
	0.000	RC1	0.00	≤ 1	102)	Doorsnede - Druk volgens 6.2.4
	1.290	RC1	0.01	≤ 1	121)	Doorsnede - Dwarskracht in z-as volgens 6.2.6
	1.290	RC1	0.01	≤ 1	122)	Doorsnede - Dwarskracht in z-as volgens 6.2.6(4) - Klasse 3 of 4
	0.000	RC1	0.03	≤ 1	123)	Doorsnede - Dwarskracht in y-as volgens 6.2.6
	0.583	RC1	0.04	≤ 1	124)	Doorsnede - Dwarskracht in y-as volgens 6.2.6(4) - Klasse 3 of 4
	0.000	RC1	0.00	≤ 1	126)	Doorsnede - Plooien door buiging volgens 6.2.6(6)
	0.000	RC1	0.01	≤ 1	161)	Doorsnede - Dubbele buiging en afschuifkracht volgens 6.2.6, 6.2.7 en 6.2.9
	1.290	RC1	0.13	≤ 1	162)	Doorsnede - Dubbele buiging en afschuifkracht volgens 6.2.9.2 en 6.2.10 - Klasse 3
	0.583	RC1	0.01	≤ 1	181)	Doorsnede - Buiging, dwars- en normaalkracht volgens 6.2.9.1
	1.290	RC1	0.05	≤ 1	212)	Doorsnede - Buiging om z-as, afschuif- en normaalkracht volgens 6.2.10 en 6.2.9.3 - Klasse 4 - Hoekprofiel
	0.000	RC1	0.01	≤ 1	221)	Doorsnede - Dubbele buiging, dwars- en normaalkracht volgens 6.2.10 en 6.2.9
	1.290	RC1	0.17	≤ 1	222)	Doorsnede - Dubbele buiging, dwars- en normaalkracht volgens 6.2.10 en 6.2.9 - Klasse 3
	1.290	RC1	0.17	≤ 1	232)	Doorsnede - Dubbele buiging, dwars- en normaalkracht volgens 6.2.10 en 6.2.9.3 - Klasse 4 - Hoekprofiel
	1.290	RC1	0.08	≤ 1	255)	Doorsnede - Buiging om z-as en afschuiving volgens 6.2.10 en 6.2.9.3 - Klasse 4 - Hoekprofiel

2.4 BEREKENING PER STAAF

Staaf No.	Positie x [m]	BG/BC/ RC	Berekening		Berekenin No.	Omschrijving
	1.290	RC1	0.16	≤ 1	265)	Doorsnede - Dubbele buiging en afschuifkracht volgens 6.2.9.3 en 6.2.10 - Klasse 4 - Hoekprofiel
98	Doorsnede No. 15 - RRO 250x150x6 (koudgevormd)					
	1.290	RC1	0.00	≤ 1	101)	Doorsnede - Trek volgens 6.2.3
	0.000	RC1	0.00	≤ 1	102)	Doorsnede - Druk volgens 6.2.4
	0.860	RC1	0.00	≤ 1	103)	Doorsnede - Druk volgens 6.2.4 - Klasse 4
	0.430	RC1	0.04	≤ 1	111)	Doorsnede - Buiging om y-as volgens 6.2.5 - Klasse 1 of 2
	0.000	RC1	0.02	≤ 1	121)	Doorsnede - Dwarskracht in z-as volgens 6.2.6
	0.860	RC1	0.02	≤ 1	122)	Doorsnede - Dwarskracht in z-as volgens 6.2.6(4) - Klasse 3 of 4
	1.290	RC1	0.00	≤ 1	123)	Doorsnede - Dwarskracht in y-as volgens 6.2.6
	0.860	RC1	0.00	≤ 1	124)	Doorsnede - Dwarskracht in y-as volgens 6.2.6(4) - Klasse 3 of 4
	0.000	RC1	0.00	≤ 1	126)	Doorsnede - Plooien door buiging volgens 6.2.6(6)
	0.430	RC1	0.04	≤ 1	141)	Doorsnede - Buiging en afschuifkracht volgens 6.2.5 en 6.2.8
	0.000	RC1	0.01	≤ 1	161)	Doorsnede - Dubbele buiging en afschuifkracht volgens 6.2.6, 6.2.7 en 6.2.9
	0.645	RC1	0.04	≤ 1	162)	Doorsnede - Dubbele buiging en afschuifkracht volgens 6.2.9.2 en 6.2.10 - Klasse 3
	1.290	RC1	0.04	≤ 1	212)	Doorsnede - Buiging om z-as, afschuif- en normaalkracht volgens 6.2.10 en 6.2.9.3 - Klasse 4 - Hoekprofiel
	0.000	RC1	0.03	≤ 1	221)	Doorsnede - Dubbele buiging, dwars- en normaalkracht volgens 6.2.10 en 6.2.9
	0.645	RC1	0.08	≤ 1	222)	Doorsnede - Dubbele buiging, dwars- en normaalkracht volgens 6.2.10 en 6.2.9 - Klasse 3
	1.290	RC1	0.04	≤ 1	232)	Doorsnede - Dubbele buiging, dwars- en normaalkracht volgens 6.2.10 en 6.2.9.3 - Klasse 4 - Hoekprofiel
99	Doorsnede No. 15 - RRO 250x150x6 (koudgevormd)					
	1.290	RC1	0.00	≤ 1	101)	Doorsnede - Trek volgens 6.2.3
	0.000	RC1	0.00	≤ 1	102)	Doorsnede - Druk volgens 6.2.4
	0.000	RC1	0.02	≤ 1	111)	Doorsnede - Buiging om y-as volgens 6.2.5 - Klasse 1 of 2
	0.583	RC1	0.01	≤ 1	117)	Doorsnede - Buiging om z-as volgens 6.2.5 - Klasse 3
	0.583	RC1	0.01	≤ 1	121)	Doorsnede - Dwarskracht in z-as volgens 6.2.6
	0.000	RC1	0.01	≤ 1	122)	Doorsnede - Dwarskracht in z-as volgens 6.2.6(4) - Klasse 3 of 4
	0.645	RC1	0.00	≤ 1	123)	Doorsnede - Dwarskracht in y-as volgens 6.2.6
	0.000	RC1	0.01	≤ 1	124)	Doorsnede - Dwarskracht in y-as volgens 6.2.6(4) - Klasse 3 of 4
	0.000	RC1	0.00	≤ 1	126)	Doorsnede - Plooien door buiging volgens 6.2.6(6)
	0.000	RC1	0.02	≤ 1	141)	Doorsnede - Buiging en afschuifkracht volgens 6.2.5 en 6.2.8
	0.583	RC1	0.01	≤ 1	152)	Doorsnede - Buiging om z-as en afschuifkracht volgens 6.2.9.2 en 6.2.10 - Klasse 3
	1.290	RC1	0.00	≤ 1	161)	Doorsnede - Dubbele buiging en afschuifkracht volgens 6.2.6, 6.2.7 en 6.2.9
	1.290	RC1	0.04	≤ 1	162)	Doorsnede - Dubbele buiging en afschuifkracht volgens 6.2.9.2 en 6.2.10 - Klasse 3
	0.000	RC1	0.04	≤ 1	212)	Doorsnede - Buiging om z-as, afschuif- en normaalkracht volgens 6.2.10 en 6.2.9.3 - Klasse 4 - Hoekprofiel
	1.290	RC1	0.01	≤ 1	221)	Doorsnede - Dubbele buiging, dwars- en normaalkracht volgens 6.2.10 en 6.2.9
	0.583	RC1	0.07	≤ 1	222)	Doorsnede - Dubbele buiging, dwars- en normaalkracht volgens 6.2.10 en 6.2.9 - Klasse 3
	0.000	RC1	0.05	≤ 1	232)	Doorsnede - Dubbele buiging, dwars- en normaalkracht volgens 6.2.10 en 6.2.9.3 - Klasse 4 - Hoekprofiel
	0.583	RC1	0.01	≤ 1	255)	Doorsnede - Buiging om z-as en afschuiving volgens 6.2.10 en 6.2.9.3 - Klasse 4 - Hoekprofiel
100	Doorsnede No. 15 - RRO 250x150x6 (koudgevormd)					
	1.290	RC1	0.00	≤ 1	101)	Doorsnede - Trek volgens 6.2.3
	0.583	RC1	0.02	≤ 1	111)	Doorsnede - Buiging om y-as volgens 6.2.5 - Klasse 1 of 2
	0.000	RC1	0.01	≤ 1	117)	Doorsnede - Buiging om z-as volgens 6.2.5 - Klasse 3
	0.000	RC1	0.00	≤ 1	121)	Doorsnede - Dwarskracht in z-as volgens 6.2.6
	1.290	RC1	0.01	≤ 1	122)	Doorsnede - Dwarskracht in z-as volgens 6.2.6(4) - Klasse 3 of 4
	0.000	RC1	0.04	≤ 1	123)	Doorsnede - Dwarskracht in y-as volgens 6.2.6
	0.583	RC1	0.04	≤ 1	124)	Doorsnede - Dwarskracht in y-as volgens 6.2.6(4) - Klasse 3 of 4
	0.000	RC1	0.00	≤ 1	126)	Doorsnede - Plooien door buiging volgens 6.2.6(6)
	0.583	RC1	0.02	≤ 1	141)	Doorsnede - Buiging en afschuifkracht volgens 6.2.5 en 6.2.8
	0.000	RC1	0.01	≤ 1	152)	Doorsnede - Buiging om z-as en afschuifkracht volgens 6.2.9.2 en 6.2.10 - Klasse 3
	0.000	RC1	0.00	≤ 1	161)	Doorsnede - Dubbele buiging en afschuifkracht volgens 6.2.6, 6.2.7 en 6.2.9
	1.290	RC1	0.06	≤ 1	162)	Doorsnede - Dubbele buiging en afschuifkracht volgens 6.2.9.2 en 6.2.10 - Klasse 3
	0.000	RC1	0.01	≤ 1	221)	Doorsnede - Dubbele buiging, dwars- en normaalkracht volgens 6.2.10 en 6.2.9
	0.645	RC1	0.11	≤ 1	222)	Doorsnede - Dubbele buiging, dwars- en normaalkracht volgens 6.2.10 en 6.2.9 - Klasse 3
	1.290	RC1	0.20	≤ 1	232)	Doorsnede - Dubbele buiging, dwars- en normaalkracht volgens 6.2.10 en 6.2.9.3 - Klasse 4 - Hoekprofiel
	1.290	RC1	0.07	≤ 1	255)	Doorsnede - Buiging om z-as en afschuiving volgens 6.2.10 en 6.2.9.3 - Klasse 4 - Hoekprofiel
	1.290	RC1	0.07	≤ 1	265)	Doorsnede - Dubbele buiging en afschuifkracht volgens 6.2.9.3 en 6.2.10 - Klasse 4 - Hoekprofiel
101	Doorsnede No. 15 - RRO 250x150x6 (koudgevormd)					
	1.290	RC1	0.00	≤ 1	101)	Doorsnede - Trek volgens 6.2.3
	0.000	RC1	0.00	≤ 1	102)	Doorsnede - Druk volgens 6.2.4
	0.860	RC1	0.00	≤ 1	103)	Doorsnede - Druk volgens 6.2.4 - Klasse 4
	0.000	RC1	0.02	≤ 1	111)	Doorsnede - Buiging om y-as volgens 6.2.5 - Klasse 1 of 2
	0.000	RC1	0.02	≤ 1	121)	Doorsnede - Dwarskracht in z-as volgens 6.2.6
	0.583	RC1	0.02	≤ 1	122)	Doorsnede - Dwarskracht in z-as volgens 6.2.6(4) - Klasse 3 of 4

2.4 BEREKENING PER STAAF

Staaf No.	Positie x [m]	BG/BC/ RC	Berekening		Berekenin No.	Omschrijving
	1.290	RC1	0.00	≤ 1	123)	Doorsnede - Dwarskracht in y-as volgens 6.2.6
	0.860	RC1	0.00	≤ 1	124)	Doorsnede - Dwarskracht in y-as volgens 6.2.6(4) - Klasse 3 of 4
	0.000	RC1	0.00	≤ 1	126)	Doorsnede - Plooien door buiging volgens 6.2.6(6)
	0.000	RC1	0.02	≤ 1	141)	Doorsnede - Buiging en afschuifkracht volgens 6.2.5 en 6.2.8
	1.290	RC1	0.01	≤ 1	161)	Doorsnede - Dubbele buiging en afschuifkracht volgens 6.2.6, 6.2.7 en 6.2.9
	0.000	RC1	0.06	≤ 1	162)	Doorsnede - Dubbele buiging en afschuifkracht volgens 6.2.9.2 en 6.2.10 - Klasse 3
	0.860	RC1	0.02	≤ 1	212)	Doorsnede - Buiging om z-as, afschuif- en normaalkracht volgens 6.2.10 en 6.2.9.3 - Klasse 4 - Hoekprofiel
	0.000	RC1	0.03	≤ 1	221)	Doorsnede - Dubbele buiging, dwars- en normaalkracht volgens 6.2.10 en 6.2.9
	0.583	RC1	0.09	≤ 1	222)	Doorsnede - Dubbele buiging, dwars- en normaalkracht volgens 6.2.10 en 6.2.9 - Klasse 3
	0.860	RC1	0.04	≤ 1	232)	Doorsnede - Dubbele buiging, dwars- en normaalkracht volgens 6.2.10 en 6.2.9.3 - Klasse 4 - Hoekprofiel
	0.645	RC1	0.03	≤ 1	265)	Doorsnede - Dubbele buiging en afschuifkracht volgens 6.2.9.3 en 6.2.10 - Klasse 4 - Hoekprofiel
102	Doorsnede No. 15 - RRO 250x150x6 (koudgevormd)					
	1.290	RC1	0.00	≤ 1	101)	Doorsnede - Trek volgens 6.2.3
	0.000	RC1	0.00	≤ 1	102)	Doorsnede - Druk volgens 6.2.4
	0.000	RC1	0.01	≤ 1	111)	Doorsnede - Buiging om y-as volgens 6.2.5 - Klasse 1 of 2
	0.583	RC1	0.01	≤ 1	117)	Doorsnede - Buiging om z-as volgens 6.2.5 - Klasse 3
	0.583	RC1	0.01	≤ 1	121)	Doorsnede - Dwarskracht in z-as volgens 6.2.6
	0.000	RC1	0.01	≤ 1	122)	Doorsnede - Dwarskracht in z-as volgens 6.2.6(4) - Klasse 3 of 4
	0.583	RC1	0.00	≤ 1	123)	Doorsnede - Dwarskracht in y-as volgens 6.2.6
	0.000	RC1	0.01	≤ 1	124)	Doorsnede - Dwarskracht in y-as volgens 6.2.6(4) - Klasse 3 of 4
	0.000	RC1	0.00	≤ 1	126)	Doorsnede - Plooien door buiging volgens 6.2.6(6)
	0.000	RC1	0.01	≤ 1	141)	Doorsnede - Buiging en afschuifkracht volgens 6.2.5 en 6.2.8
	0.583	RC1	0.01	≤ 1	152)	Doorsnede - Buiging om z-as en afschuifkracht volgens 6.2.9.2 en 6.2.10 - Klasse 3
	0.000	RC1	0.01	≤ 1	161)	Doorsnede - Dubbele buiging en afschuifkracht volgens 6.2.6, 6.2.7 en 6.2.9
	0.000	RC1	0.04	≤ 1	162)	Doorsnede - Dubbele buiging en afschuifkracht volgens 6.2.9.2 en 6.2.10 - Klasse 3
	0.000	RC1	0.04	≤ 1	212)	Doorsnede - Buiging om z-as, afschuif- en normaalkracht volgens 6.2.10 en 6.2.9.3 - Klasse 4 - Hoekprofiel
	1.290	RC1	0.01	≤ 1	221)	Doorsnede - Dubbele buiging, dwars- en normaalkracht volgens 6.2.10 en 6.2.9
	0.000	RC1	0.07	≤ 1	222)	Doorsnede - Dubbele buiging, dwars- en normaalkracht volgens 6.2.10 en 6.2.9 - Klasse 3
	0.000	RC1	0.04	≤ 1	232)	Doorsnede - Dubbele buiging, dwars- en normaalkracht volgens 6.2.10 en 6.2.9.3 - Klasse 4 - Hoekprofiel
103	Doorsnede No. 15 - RRO 250x150x6 (koudgevormd)					
	1.290	RC1	0.00	≤ 1	101)	Doorsnede - Trek volgens 6.2.3
	0.645	RC1	0.01	≤ 1	111)	Doorsnede - Buiging om y-as volgens 6.2.5 - Klasse 1 of 2
	1.290	RC1	0.01	≤ 1	121)	Doorsnede - Dwarskracht in z-as volgens 6.2.6
	1.290	RC1	0.01	≤ 1	122)	Doorsnede - Dwarskracht in z-as volgens 6.2.6(4) - Klasse 3 of 4
	0.000	RC1	0.04	≤ 1	123)	Doorsnede - Dwarskracht in y-as volgens 6.2.6
	0.583	RC1	0.04	≤ 1	124)	Doorsnede - Dwarskracht in y-as volgens 6.2.6(4) - Klasse 3 of 4
	0.000	RC1	0.00	≤ 1	126)	Doorsnede - Plooien door buiging volgens 6.2.6(6)
	0.645	RC1	0.01	≤ 1	141)	Doorsnede - Buiging en afschuifkracht volgens 6.2.5 en 6.2.8
	0.000	RC1	0.00	≤ 1	161)	Doorsnede - Dubbele buiging en afschuifkracht volgens 6.2.6, 6.2.7 en 6.2.9
	0.645	RC1	0.05	≤ 1	162)	Doorsnede - Dubbele buiging en afschuifkracht volgens 6.2.9.2 en 6.2.10 - Klasse 3
	0.000	RC1	0.01	≤ 1	221)	Doorsnede - Dubbele buiging, dwars- en normaalkracht volgens 6.2.10 en 6.2.9
	0.645	RC1	0.12	≤ 1	222)	Doorsnede - Dubbele buiging, dwars- en normaalkracht volgens 6.2.10 en 6.2.9 - Klasse 3
	1.290	RC1	0.21	≤ 1	232)	Doorsnede - Dubbele buiging, dwars- en normaalkracht volgens 6.2.10 en 6.2.9.3 - Klasse 4 - Hoekprofiel
	1.290	RC1	0.07	≤ 1	255)	Doorsnede - Buiging om z-as en afschuiving volgens 6.2.10 en 6.2.9.3 - Klasse 4 - Hoekprofiel
	1.290	RC1	0.08	≤ 1	265)	Doorsnede - Dubbele buiging en afschuifkracht volgens 6.2.9.3 en 6.2.10 - Klasse 4 - Hoekprofiel

CONSTRUCTIEVE BEREKENING

PROJECT

Fastned Uitvoer trillingsanalyse

KLANT

AUTEUR

Isometrisch

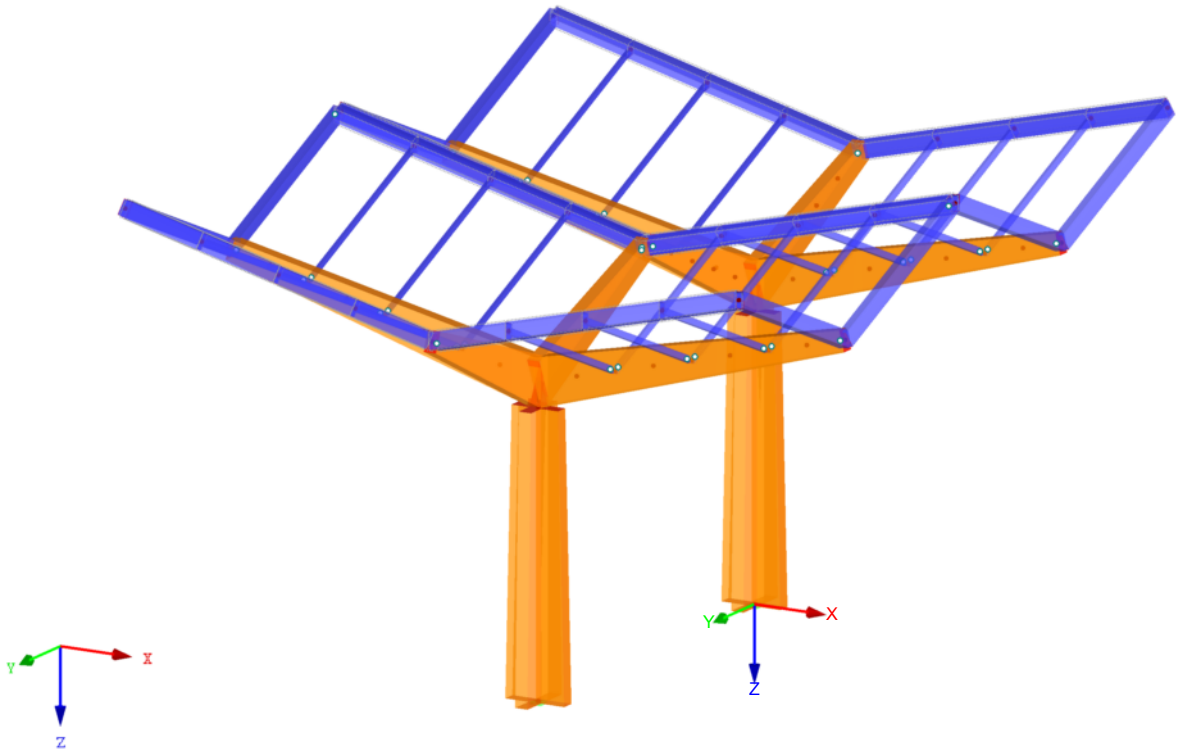

ALGEMENE GEGEVENS MODEL

Algemeen	Modelnaam	:	DLU_Fastned 4.0-definitief_v1
	Modelomschrijving	:	Fastned 4.0
	Modeltype	:	3D
	Positieve richting van globale z-as	:	Naar beneden
	Classificatie van belastingsgevallen en combinaties	:	Volgens norm: EN 1990 Nationale Bijlage: NEN:2011 - Niederlande
Opties	☐ RF-FORM-FINDING - Vind aanvangsevenwichtsvormen van membranen en kabelconstructies		
	☐ RF-CUTTING-PATTERN		
	☐ Leidingwerk berekening		
	☐ Gebruik CQC regel		
	☐ CAD/BIM model mogelijk maken		
	Standaard zwaartekracht		
	g	:	10.00 m/s^2

EE-NETINSTELLINGEN

Algemeen	Doellengte van eindige elementen	l_{FE}	:	0.5 m
	Max. afstand tussen een knoop en een lijn om in de lijn te integreren	ε	:	0.0 m
	Max. aantal netknopen (in duizenden)		:	500
Staven	Aantal staafverdelingen van kabels, Elastische bedding, voutes of plastische karakteristiek		:	10
	☒ Stel staafverdelingen in voor grote vervorming of post-kritische berekening			
	☒ Gebruik staafverdeling ook voor rechte staven, die niet zijn geintegreerd in de vlakken, met		:	Doellengte LFE van eindige elementen
	Min. aantal staafverdelingen		:	10
	☒ Gebruik staafverdeling door de knopen die op de staaf liggen			
Vlakken	Max. verh. van EE-rechthoekdiagonalen	Δ_D	:	1.800
	Max. uit-het-vlak hoek van twee EE uit het vlak	α	:	0.50 °
	Vorm van de eindige elementen		:	Driehoeken en schalen ☒ Gelijke Vierhoeken genereren indien mogelijk

2.1 BELASTINGSGEVALLEN

Bel. Geval	BG omschrijving	EN 1990 | NEN:2011 Actiecategorie	Eigen gewicht - Factor in richting			
			Actief	X	Y	Z
BG1	Eigen gewicht	Blijvend	☒	0.000	0.000	1.000
BG2	Permanente belasting	Blijvend	☐			
BG14	Permanente belasting	Blijvend	☒	0.000	0.000	1.000

2.1.1 BELASTINGSGEVALLEN - BEREKENINGSPARAMETERS

Bel. Geval	BG omschrijving	Berekeningsparameters		
BG1	Eigen gewicht	Berekeningsmethode	:	⦿ Geometrisch lineaire berekening
		Methode voor het oplossen van een systeem met niet-lineaire algebraïsche vergelijkingen	:	⦿ Newton-Raphson
BG2	Permanente belasting	Berekeningsmethode	:	⦿ Geometrisch lineaire berekening
		Methode voor het oplossen van een systeem met niet-lineaire algebraïsche vergelijkingen	:	⦿ Newton-Raphson
BG14	Permanente belasting	Berekeningsmethode	:	⦿ Geometrisch lineaire berekening
		Methode voor het oplossen van een systeem met niet-lineaire algebraïsche vergelijkingen	:	⦿ Newton-Raphson

2.5 BELASTINGSCOMBINATIES

Last Combin.	Belastingscombinatie OS	Omschrijving	No.	Factor	Belastingsgeval	
BC49		Permanent+EG =1.0	1	1.00	BG14	Permanente belasting

2.5.2 BELASTINGSCOMBINATIES - BEREKENINGSPARAMETERS

Last Combin.	Omschrijving	Berekeningsparameters		
BC49	Permanent+EG =1.0	Berekeningsmethode	:	⦿ 2e Orde berekening (P-Delta)
		Methode voor het oplossen van een systeem met niet-lineaire algebraïsche vergelijkingen	:	⦿ Picard
		Opties	:	☒ Beschouw gunstige effecten t.g.v. trekkracht(en)
			:	☒ Snedekrachten volgens het vervormde systeem beschouwen voor:

2.5.2 BELASTINGSCOMBINATIES - BEREKENINGSPARAMETERS

Last Combin.	Omschrijving	Berekeningsparameters	
			☒ Normaalkrachten N ☒ Dwarskrachten V_y en V_z ☒ Momenten M_y, M_z en M_T
		Activeer stijheidsfactor van:	: ☒ Materialen (veiligheidsfactor γM) : ☒ Doorsnedes (factor voor J, I_y, I_z, A, A_y, A_z) : ☒ Staven (factor voor GJ, EI_y, EI_z, EA, GA_y, GA_z)

1.1 GLOBALE GEGEVENS

	Activiteiten	☒ Modale berekening (eigenvectoren) ☐ Massa-combinaties ☐ Opgelegde trillingen ☐ Responsspectra ☐ Accelerogrammen ☐ Tijddiagrammen ☐ Equivalente statische kracht berekening
	Instelling	Zwaartekrachtversnelling : 10.00 m/s²

1.2.1 MASSA-GEVAL - ALGEMEEN

No.	Beschrijving massa-geval	Parameters	
MF1		Type massa-geval	: Blijvend
		Massa's	☒ : Vanuit kracht componenten van Belastingscombinatie BC49-Permanent+EG =1.0

1.4.1 NATUURLIJK TRILLINGSGEVAL - ALGEMEEN

EWG Geval	Eigentrillingsgeval beschrijving	Parameters	
ESF1	MF1	Aantal van kleinste eigenwaardes	: 10
		Inwerkende massa's	: MF1
		Massa's beschouwd in	: ☒ X-richting ☒ Y-richting ☒ Z-richting ☒ Om X ☒ Om Y ☒ Om Z

1.4.2. NATUURLIJK TRILLINGSGEVAL - BEREKENING PARAMTERS

EWG Geval	Eigentrillingsgeval beschrijving	Berekeningsparameters	
ESF1	MF1	Type massamatrix:	: Diagonaalmatrix
		Schalen van trillingseigenvormen	: Max $\{u_j\} = 1$
		Oplossingsmethode voor eigenwaardes	: Lanczos

ESF1

5.1 EIGENFREQUENTIES: ESF1

Vorm No.	Eigenwaarde λ	Hoekfrequentie ω [rad/s]	Eigenfrequentie f [Hz]	Eigenperiode T [s]	
1	142.309	11.929	1.899	0.527	
2	243.344	15.599	2.483	0.403	
3	459.871	21.445	3.413	0.293	
4	551.078	23.475	3.736	0.268	
5	565.965	23.790	3.786	0.264	
6	1441.657	37.969	6.043	0.165	
7	1532.769	39.151	6.231	0.160	
8	1725.015	41.533	6.610	0.151	
9	1759.040	41.941	6.675	0.150	
10	1865.235	43.188	6.874	0.145	

ESF1

5.7 EFFECTIEVE MODALEMASSAFACTOREN ESF1

Vorm	Modale Mas	Effectieve modale massa						Effectieve modale massafactor		
No.	M_i [kg]	m_{eX} [kg]	m_{eY} [kg]	m_{eZ} [kg]	$m_{\varphi X}$ [kg.m²]	$m_{\varphi Y}$ [kg.m²]	$m_{\varphi Z}$ [kg.m²]	f_{meX} [-]	f_{meY} [-]	f_{meZ} [-]
1	2305.55	0.00	0.00	0.00	0.00	0.00	160937.15	0.000	0.000	0.000
2	3427.49	4861.63	0.00	0.00	0.00	48128.39	0.00	0.504	0.000	0.000
3	1772.60	6.54	0.00	0.00	0.00	0.76	0.00	0.001	0.000	0.000
4	3539.13	0.00	7333.03	0.00	11886.02	0.00	0.00	0.000	0.760	0.000
5	1436.62	0.00	0.00	0.00	0.00	0.00	1728.64	0.000	0.000	0.000
6	2233.92	60.49	0.00	0.00	0.00	427.78	0.00	0.006	0.000	0.000
7	1388.64	0.00	0.00	50.67	0.00	0.00	0.00	0.000	0.000	0.005
8	1687.69	0.00	0.00	0.00	0.00	0.00	19844.80	0.000	0.000	0.000
9	1064.35	0.00	99.33	0.00	66774.29	0.00	0.00	0.000	0.010	0.000
10	3038.35	3174.43	0.00	0.00	0.00	30103.56	0.00	0.329	0.000	0.000
Som	21894.34	8103.09	7432.36	50.67	78660.32	78660.50	182510.59	0.839	0.770	0.005

u

RF-DYNAM Pro
Eigenschwingung u
Eigenform Nr. 1 - 1.899 Hz

Isometrisch

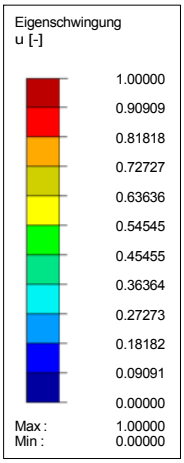

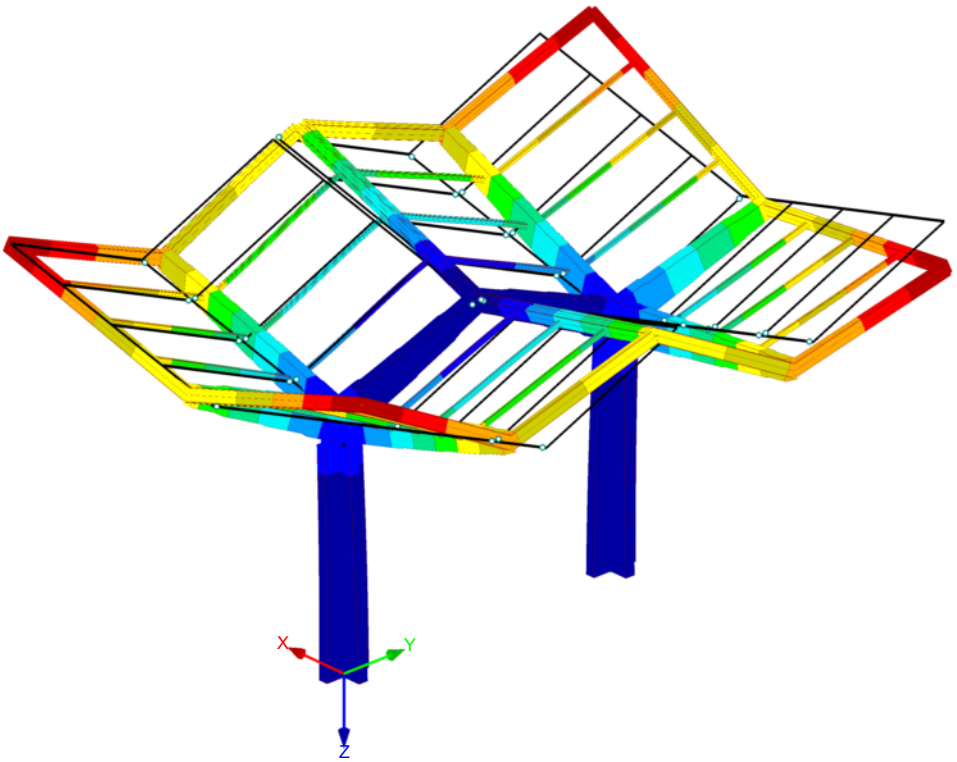

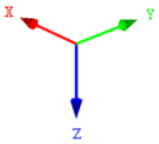

Max u: 1.00000, Min u: 0.00000 [-]
Factor voor verplaatsingen: 1.00

u

RF-DYNAM Pro
Eigenschwingung u
Eigenform Nr. 1 - 1.899 Hz

in Z-richting

Eigenschwingung
u [-]

	1.00000
	0.90909
	0.81818
	0.72727
	0.63636
	0.54545
	0.45455
	0.36364
	0.27273
	0.18182
	0.09091
	0.00000
Max :	1.00000
Min :	0.00000

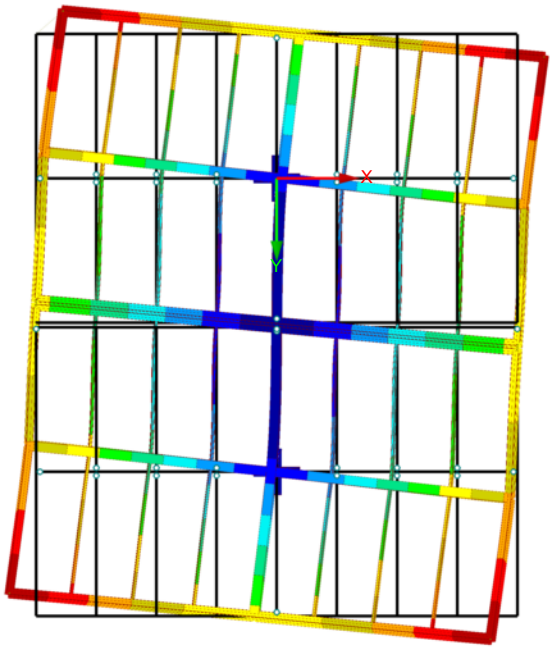

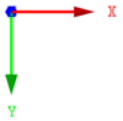

Max u: 1.00000, Min u: 0.00000 [-]
Factor voor verplaatsingen: 0.82

3.144 m

u

RF-DYNAM Pro
Eigenschwingung u
Eigenform Nr. 2 - 2.483 Hz

Isometrisch

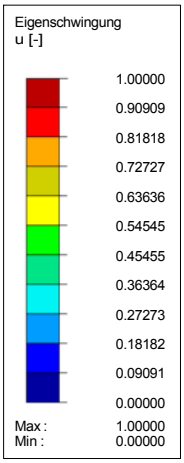

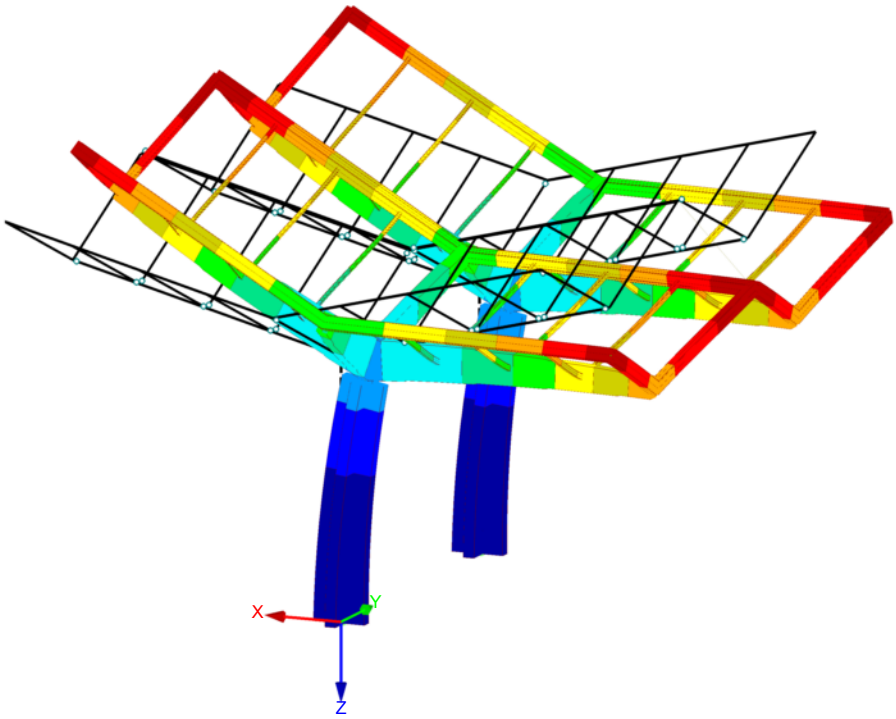

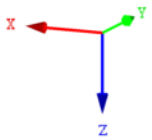

Max u: 1.00000, Min u: 0.00000 [-]
Factor voor verplaatsingen: 2.00

u

RF-DYNAM Pro
Eigenschwingung u
Eigenform Nr. 1 - 1.899 Hz

in Z-richting

Eigenschwingung
u [-]

	1.00000
	0.90909
	0.81818
	0.72727
	0.63636
	0.54545
	0.45455
	0.36364
	0.27273
	0.18182
	0.09091
	0.00000
Max :	1.00000
Min :	0.00000

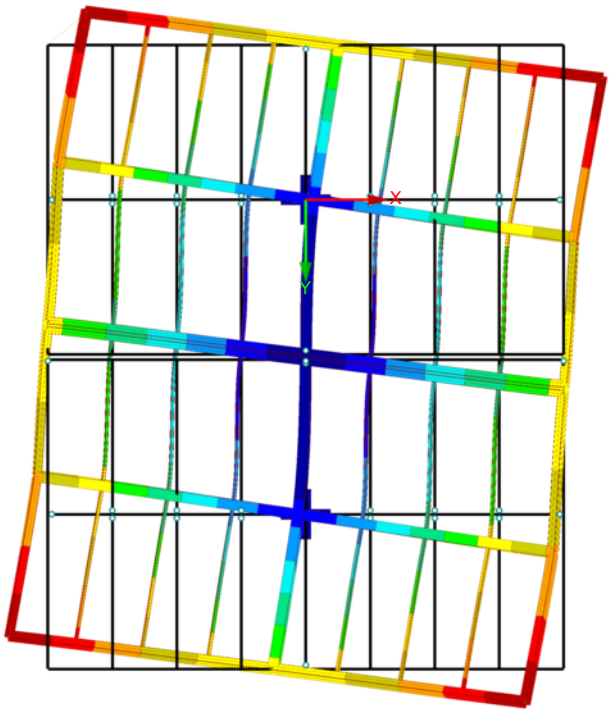

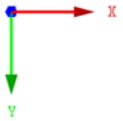

Max u: 1.00000, Min u: 0.00000 [-]
Factor voor verplaatsingen: 1.10

2.934 m

u

RF-DYNAM Pro
Eigenschwingung u
Eigenform Nr. 3 - 3.413 Hz

Isometrisch

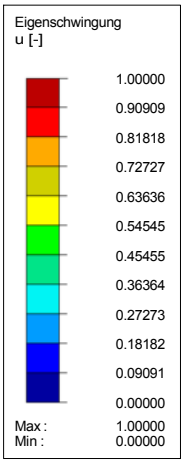

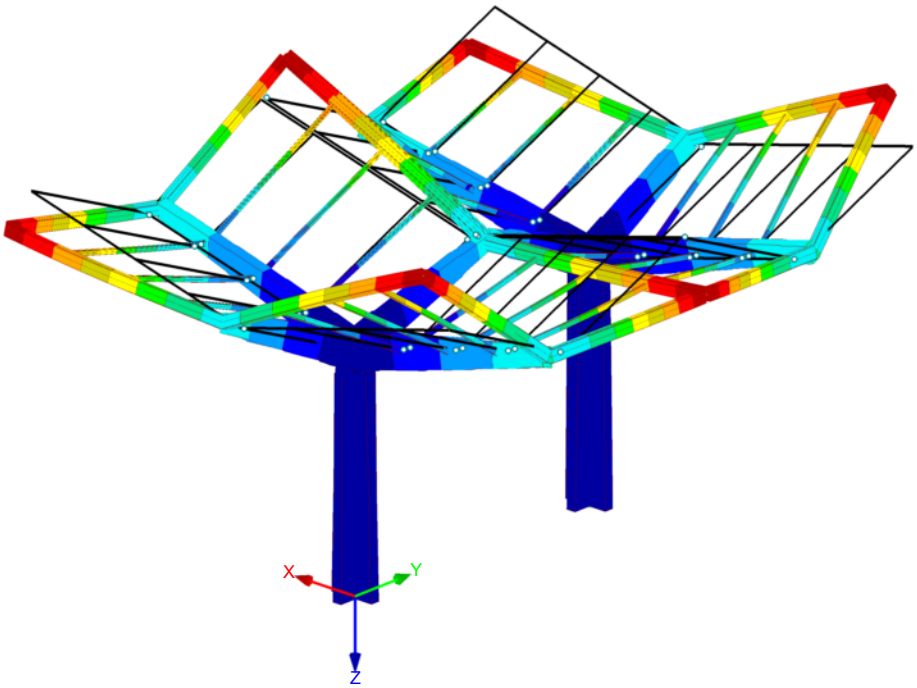

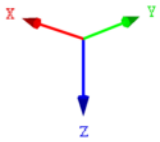

Max u: 1.00000, Min u: 0.00000 [-]
Factor voor verplaatsingen: 1.10

u

RF-DYNAM Pro
Eigenschwingung u
Eigenform Nr. 3 - 3.413 Hz

in Z-richting

Eigenschwingung
u [-]

	1.00000
	0.90909
	0.81818
	0.72727
	0.63636
	0.54545
	0.45455
	0.36364
	0.27273
	0.18182
	0.09091
	0.00000
Max :	1.00000
Min :	0.00000

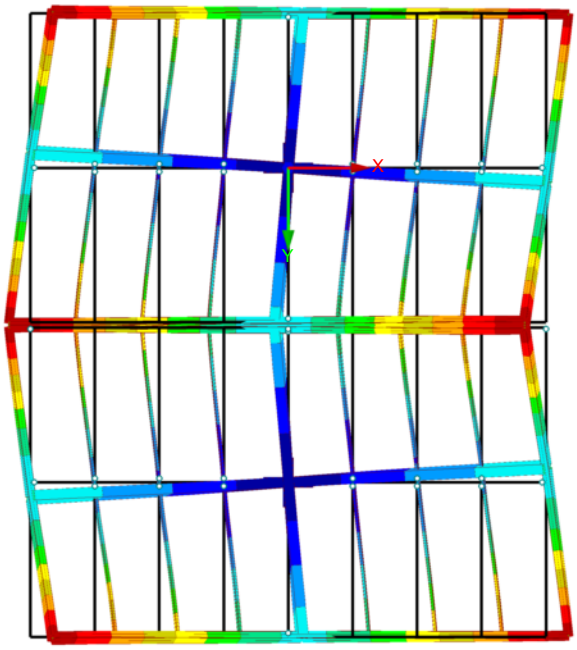

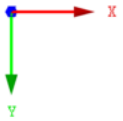

Max u: 1.00000, Min u: 0.00000 [-]
Factor voor verplaatsingen: 0.81

2.934 m

u

RF-DYNAM Pro
Eigenschwingung u
Eigenform Nr. 4 - 3.736 Hz

Isometrisch

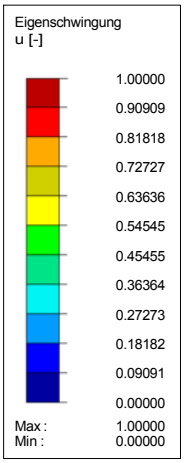

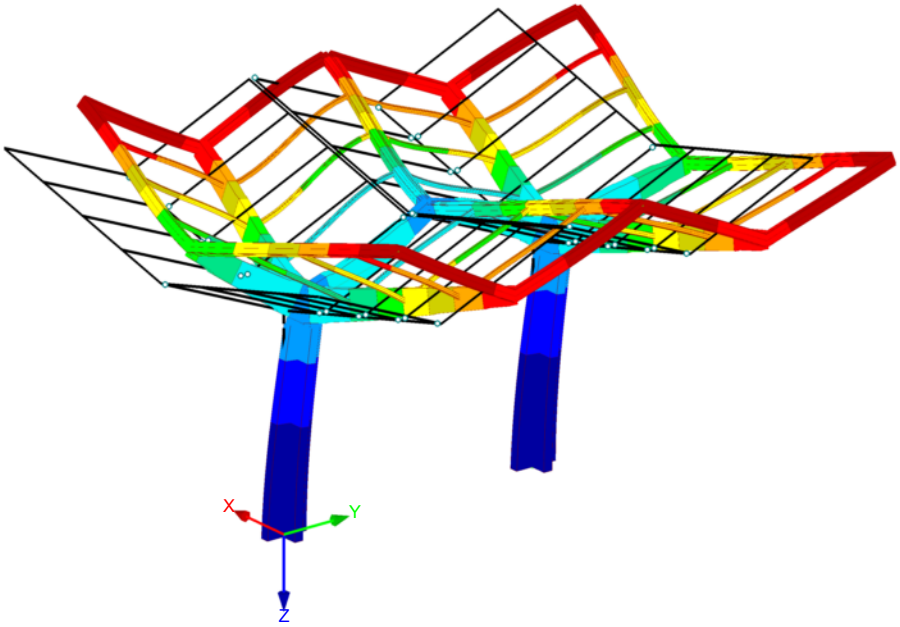

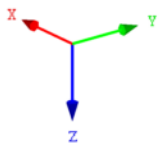

Max u: 1.00000, Min u: 0.00000 [-]
Factor voor verplaatsingen: 2.00

u

RF-DYNAM Pro
Eigenschwingung u
Eigenform Nr. 4 - 3.736 Hz

in Z-richting

Eigenschwingung
u [-]

	1.00000
	0.90909
	0.81818
	0.72727
	0.63636
	0.54545
	0.45455
	0.36364
	0.27273
	0.18182
	0.09091
	0.00000
Max :	1.00000
Min :	0.00000

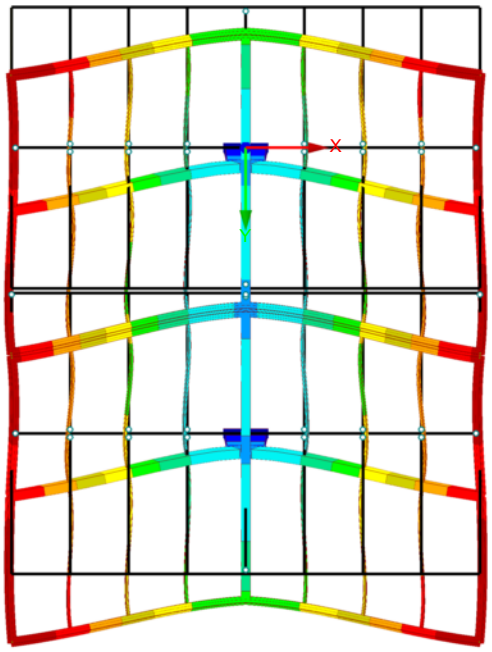

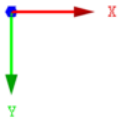

Max u: 1.00000, Min u: 0.00000 [-]
Factor voor verplaatsingen: 1.50

3.23 m